Transmission Assembly

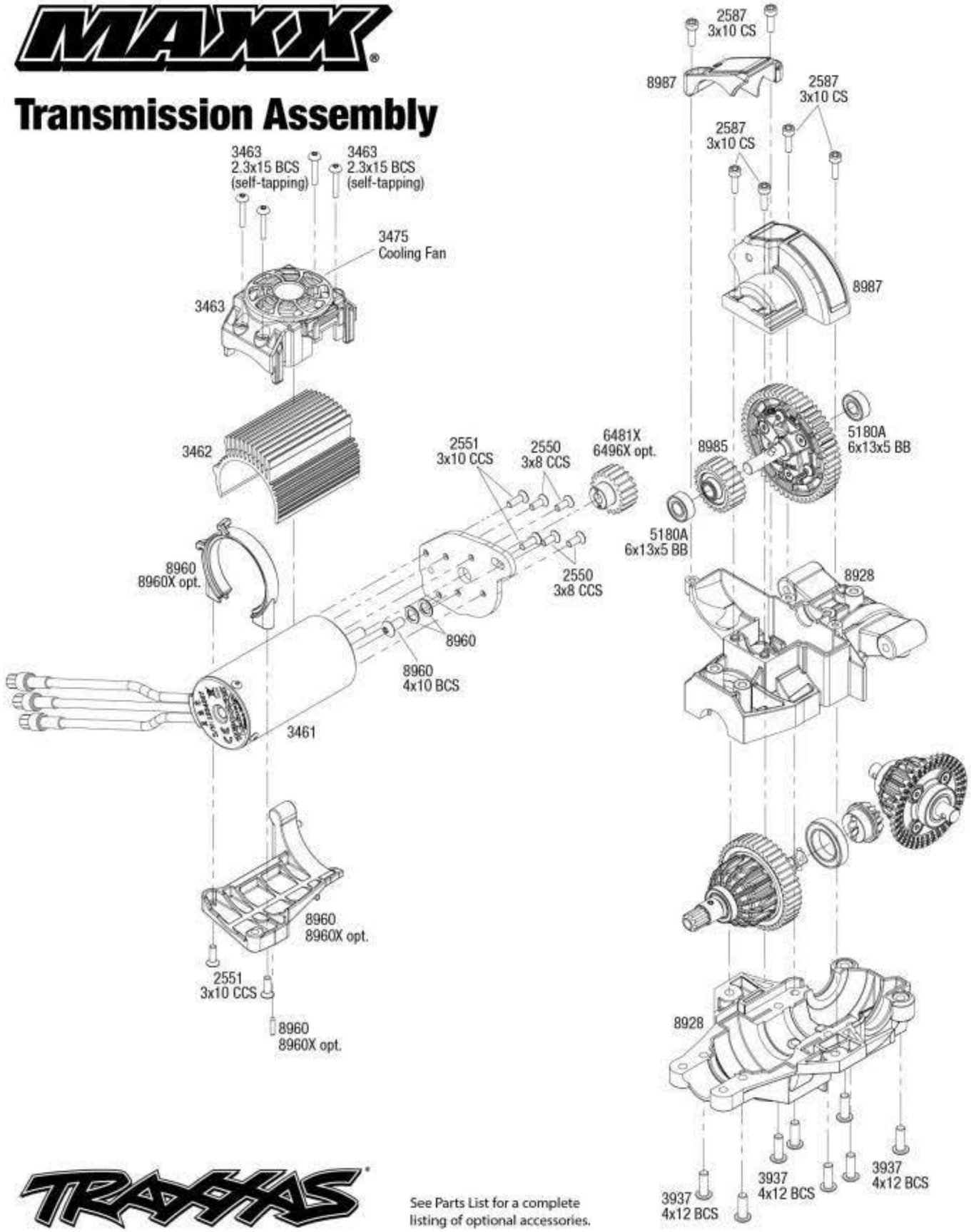

See Parts List for a complete listing of optional accessories.

Center Differential Assembly

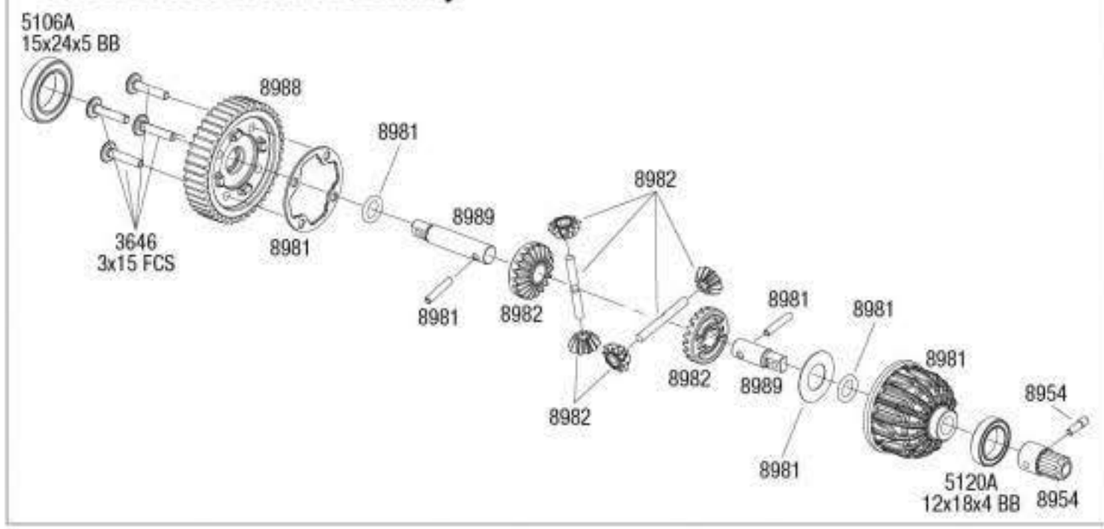

Cush Drive Assembly

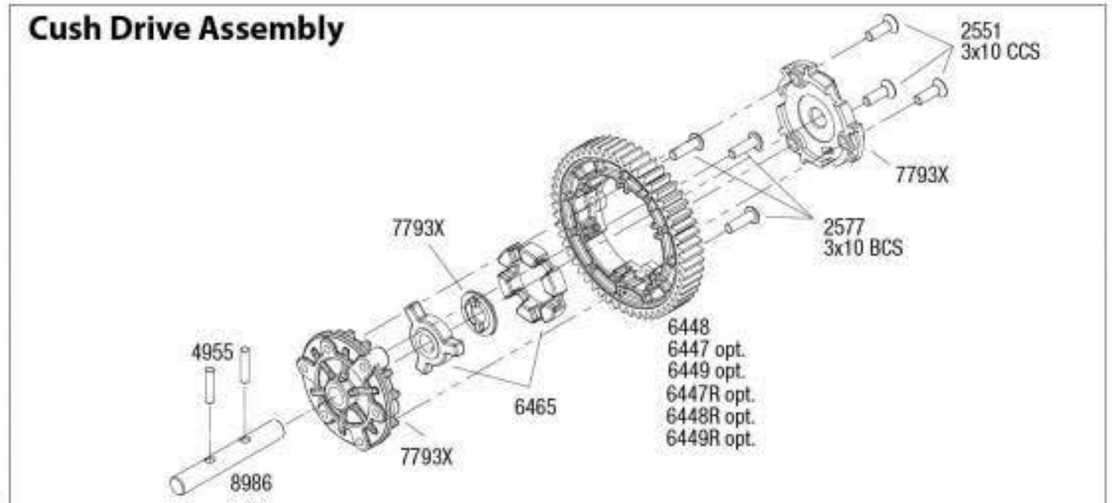

Front & Rear Driveshaft Assembly

Available fully assembled as part #8996

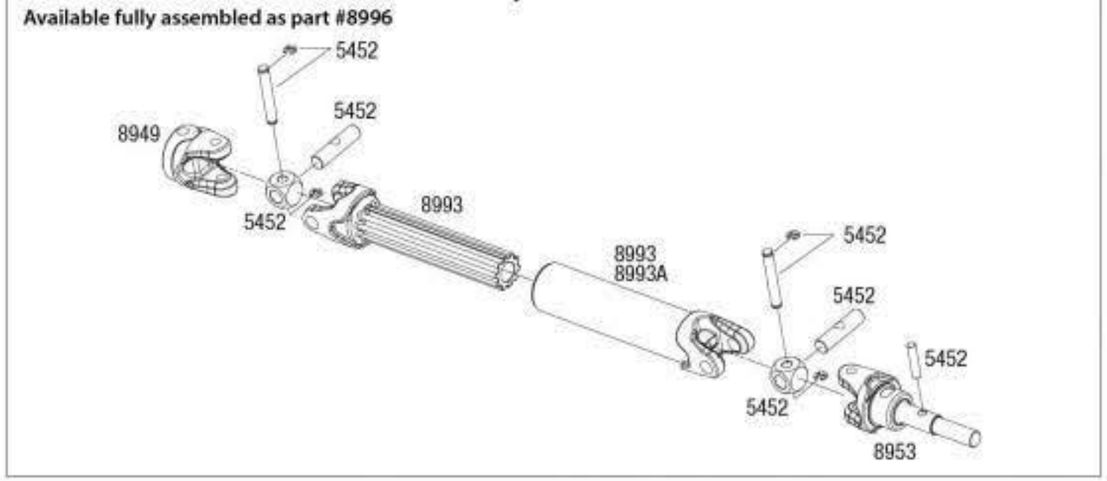

REV 211111-R01

Specifications on this page are subject to change without notice. Every attempt has been made to ensure the accuracy of this drawing; however, Traxxas cannot be held responsible for typographical or other errors.