Fiesta ST Rally BRUSHLESS

Rear Assembly

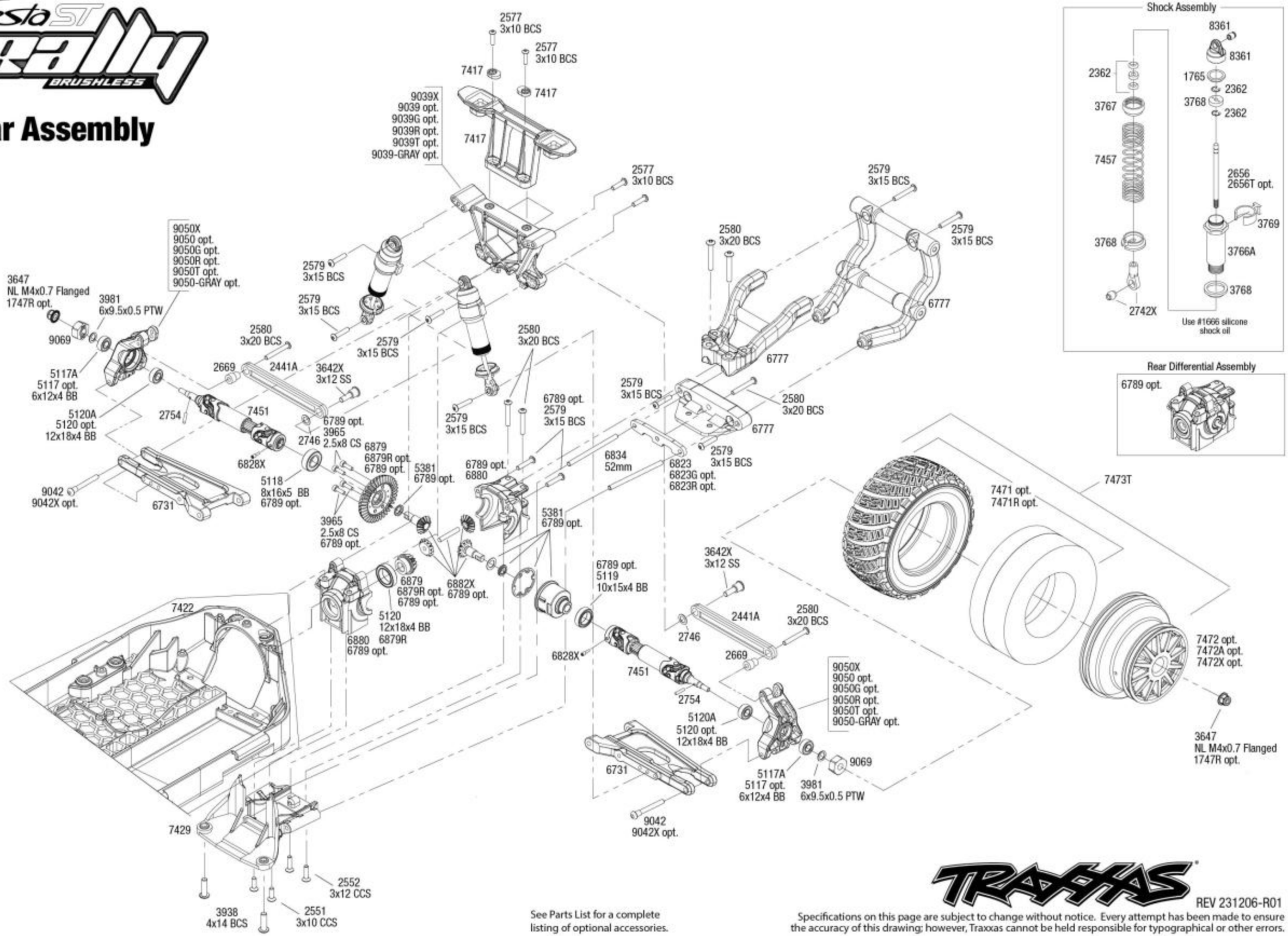

See Parts List for a complete listing of optional accessories.

TRAXXAS®

REV 231206-R01

Specifications on this page are subject to change without notice. Every attempt has been made to ensure the accuracy of this drawing; however, Traxxas cannot be held responsible for typographical or other errors.