RUSTLER 4x4 BRUSHLESS

Body Assembly

6728
6728A opt.
6728G opt.
6728R opt.
6728T opt.
6728X opt.

6721
6721A opt.
6721G opt.
6721R opt.
6721T opt.
6721X opt.

6720
4859
3x10 FCS

6720
4859
3x10 FCS

6720
4859
3x10 FCS

6740-RED
6740-BLUE
6717A opt.
6717G opt.
6717P opt.
6717R opt.
6717T opt.
6717 opt.
6717X opt.
6734G opt.
6734L opt.
6734P opt.
6734R opt.
6734T opt.
6740L opt.

6719

6728
2584
3x12 CS

6728
2584
3x12 CS

6728
2584
3x12 CS

6720

6720

6720

6720
3x12 SS

6720
3x12 BCS

6720

6720
2584
3x12 CS

6720
3x12 SS

6720
2584
3x12 CS

6721
3931
3x8 FCS

6721
3931
3x8 FCS

Completed Assembly (view from bottom)

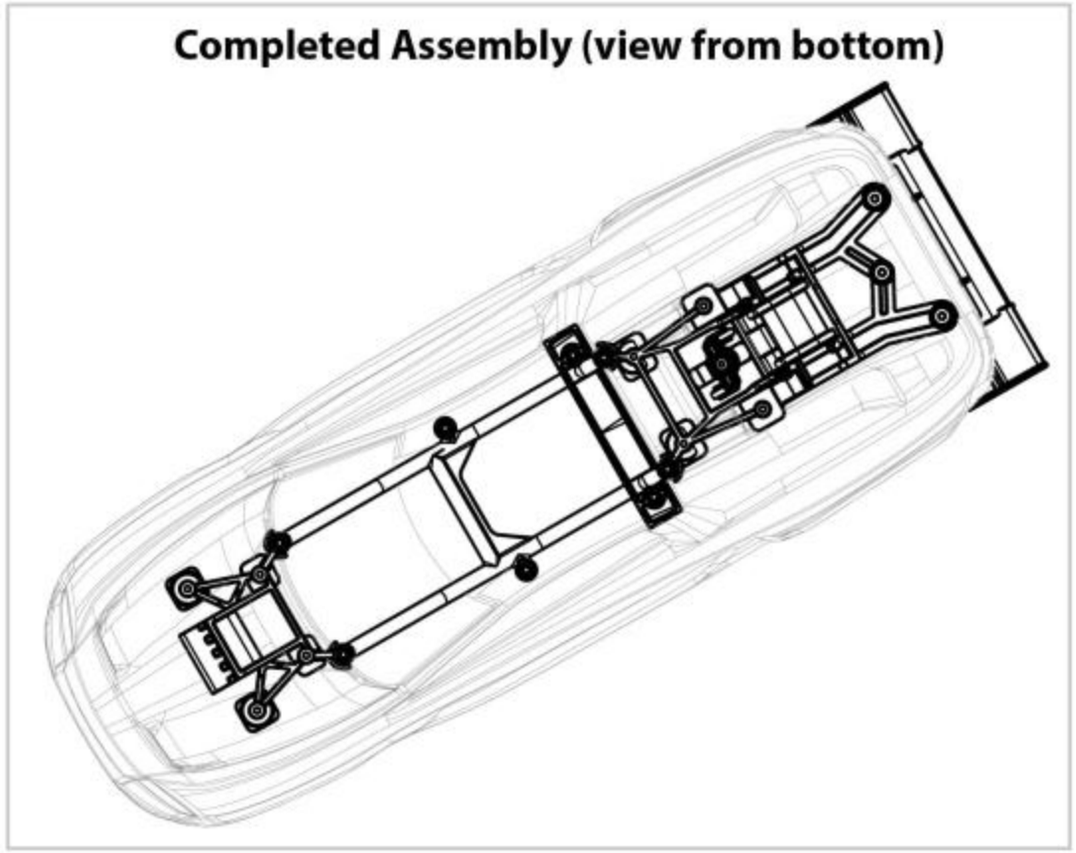

REV 230620-R00

TRAXXAS

Specifications on this page are subject to change without notice. Every attempt has been made to ensure the accuracy of this drawing; however, Traxxas cannot be held responsible for typographical or other errors.

See Parts List for a complete listing of optional accessories.