SPARTAN

Front Assembly

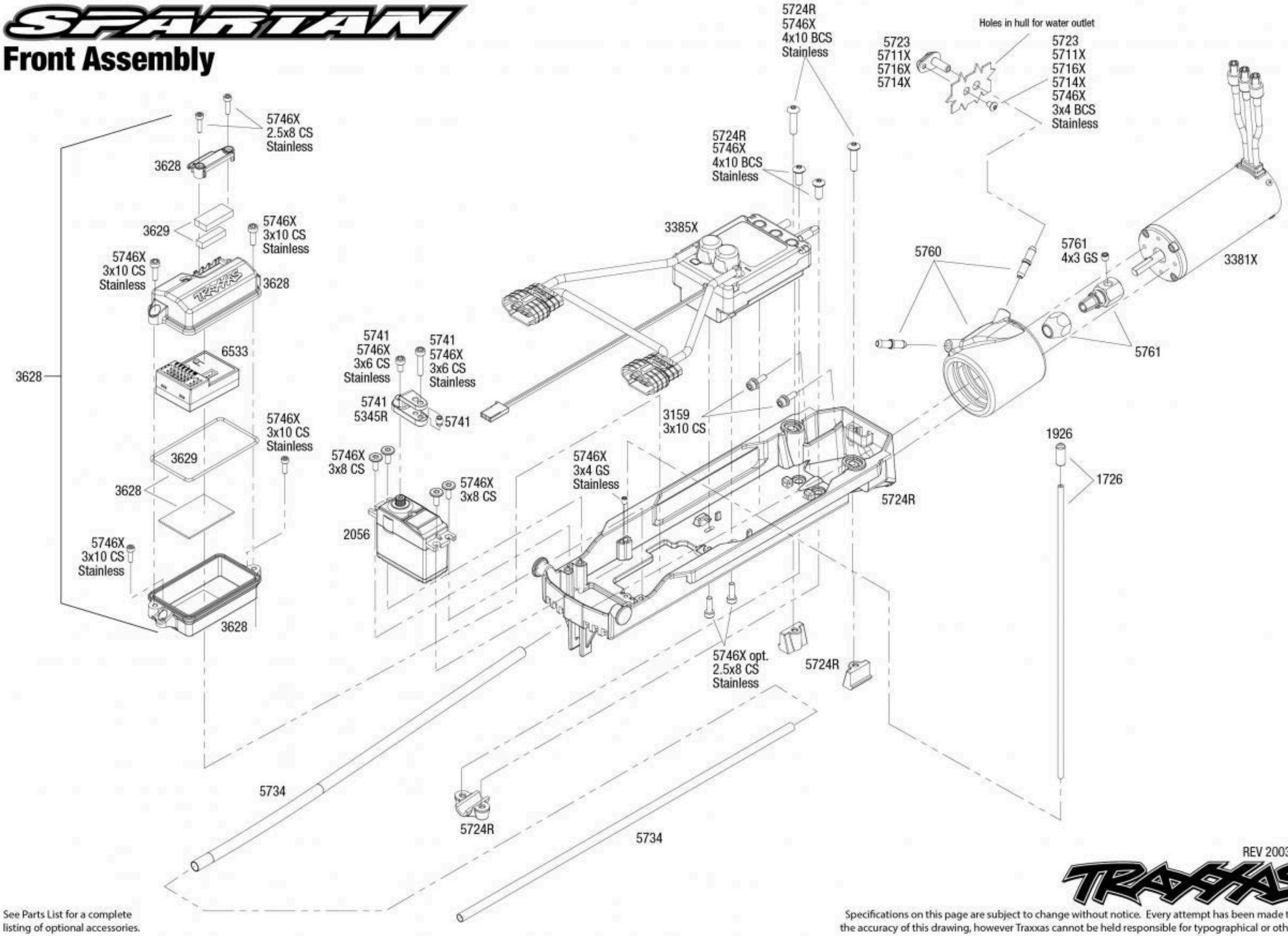

See Parts List for a complete listing of optional accessories.

REV 200311-R06

TRAXXAS

Specifications on this page are subject to change without notice. Every attempt has been made to ensure the accuracy of this drawing, however Traxxas cannot be held responsible for typographical or other errors.