SUMMIT Rear Assembly

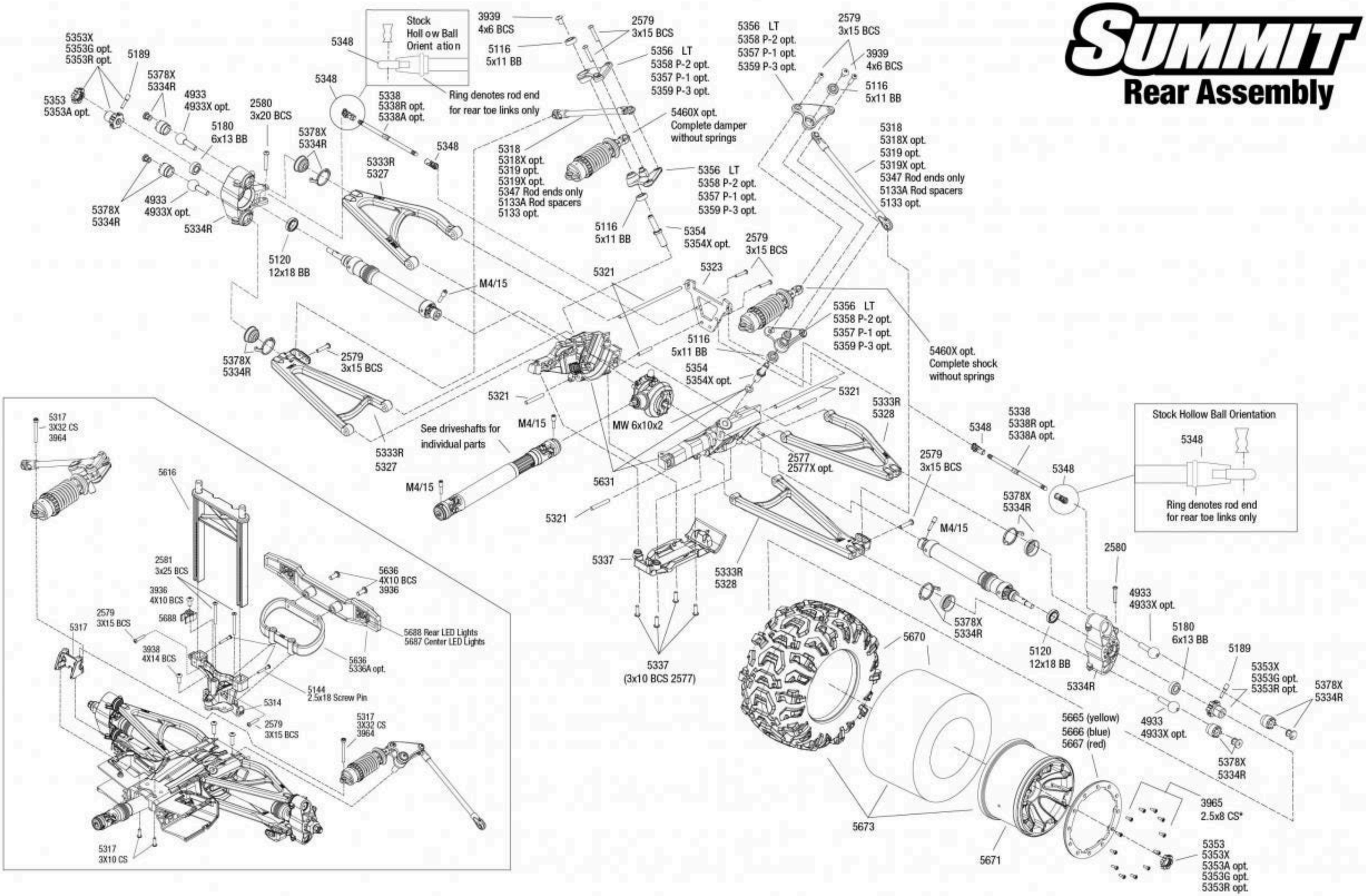

See Parts List for a complete listing of optional accessories.

*included with beadlock rings (#5665,5666,5667)

REV 200511-R07

Specifications on this page are subject to change without notice. Every attempt has been made to ensure the accuracy of this drawing; however ,Traxxas cannot be held responsible for typographical or other errors.