REVO 3:3
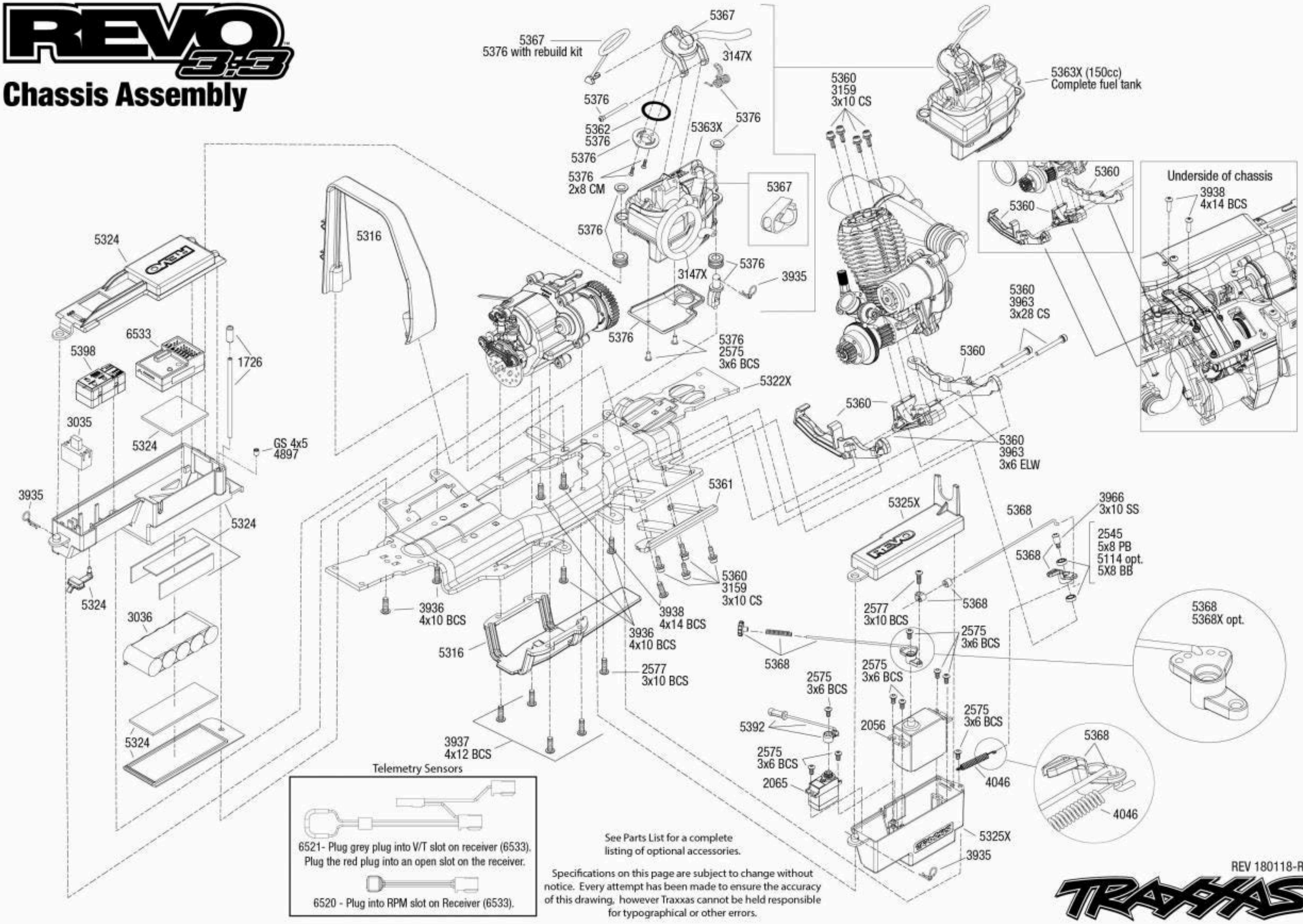
Chassis Assembly