NOTE: ALL MATERIAL COMPLIANT ROHS STANDARD

REV	DATE	MODIFICATION	DRAWN

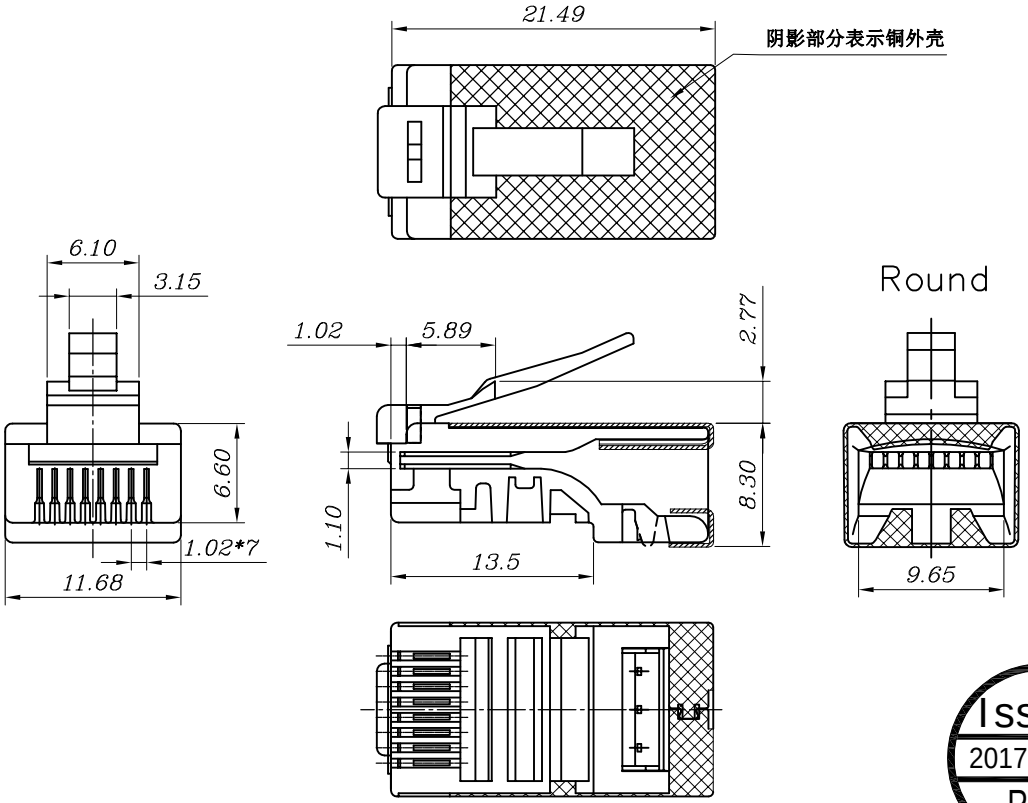

SPECIFICATIONS

1.ELECTRICAL:
UL APPLICATIONS: 250 VOLTS AC MAX., AT 2 AMPS.
DIELECTRIC WITHSTANDING VOLTAGE : 1000 VOLTS AC.
INSULATION RESISTANCE: 500 MΩ.
TERMINATION: RESISTANCE 20mΩ MAX AFTER ENVIRONMENTAL TESTING.

2.MECHANICAL:
CABLE-TO-PLUG TENSILE STRENGTH : 20POUND MIN.
DURABILITY : 1200 MATING CYCLES.

3.MATERIAL & FINISH:
HOUSING: POLYCARBONATE, UL94V-0 OR UL94V-2.
COLOR : TRANSPARENT OR OTHER COLOR ARE AVAILABLE.
CONTACT BLADE: COPPER ALLOY.
CONDUCTOR : STRANDED WIRE , 26 AWG.
(It can be used for the wire OD fromØ 0.96~Ø1.02)
GOLD PLATING: 3u"~50u",ARE AVAILABLE.

Issued
2017.12.27
R&D

BLADE:	E	EB	Y	YB	Z	A	AE	AB	EC	AL	ZL	YBL
Drawing												
Mark	✓											

GOLD PLATING	3Mu"	3u"	6u"	15u"	30u"	50u"	CABLE TYPE	ROUND	FLAT
Mark						✓	Mark	✓	

EAGLE ELECTRONICS
EagleG.com - Quality You Can Trust...

DRAWN BY	DATE: 2017/12/27	DESCRIPTION: P88RE50V2S-RJ45 Cat.5E Shielded Plug Stranded 50 Micron
CHECKED BY	SHEET 1 of 1	ITEM NO.
APPROVED BY	SCALE 1:1	REV. 00 / UNIT: mm

ST-DR-009A