Ph 07 3277 2277
Fax 07 3277 2288
Email sales@selectgear.com.au

When do I use a Drop Link?

The Drop Link is a very useful accessory and is employed when the vehicle does not have a pillar which extends to the roof. This is the case most commonly with coupe or fastback style vehicles. While the drop link is mounted up onto the underside of the roof, the drop of webbing brings the loop link down thereby ensuring that the sash part of the belt goes across the occupant from shoulder to opposing hip and not across the neck. Refer to the below diagram.

This part may be used with any "On Pillar" or "In Pillar" belt that is ordinarily supplied with a pillar anchored loop link (sash guide). The same rules apply when determining the first angle.

The Drop Link is fitted to the seat belt at the time of manufacture. Any seat belt that requires a drop link should be advised such at the time of order. Whilst the drop link can be retro fitted, the original fitted sash guide cannot be removed. Contact Select Gear for further advice.
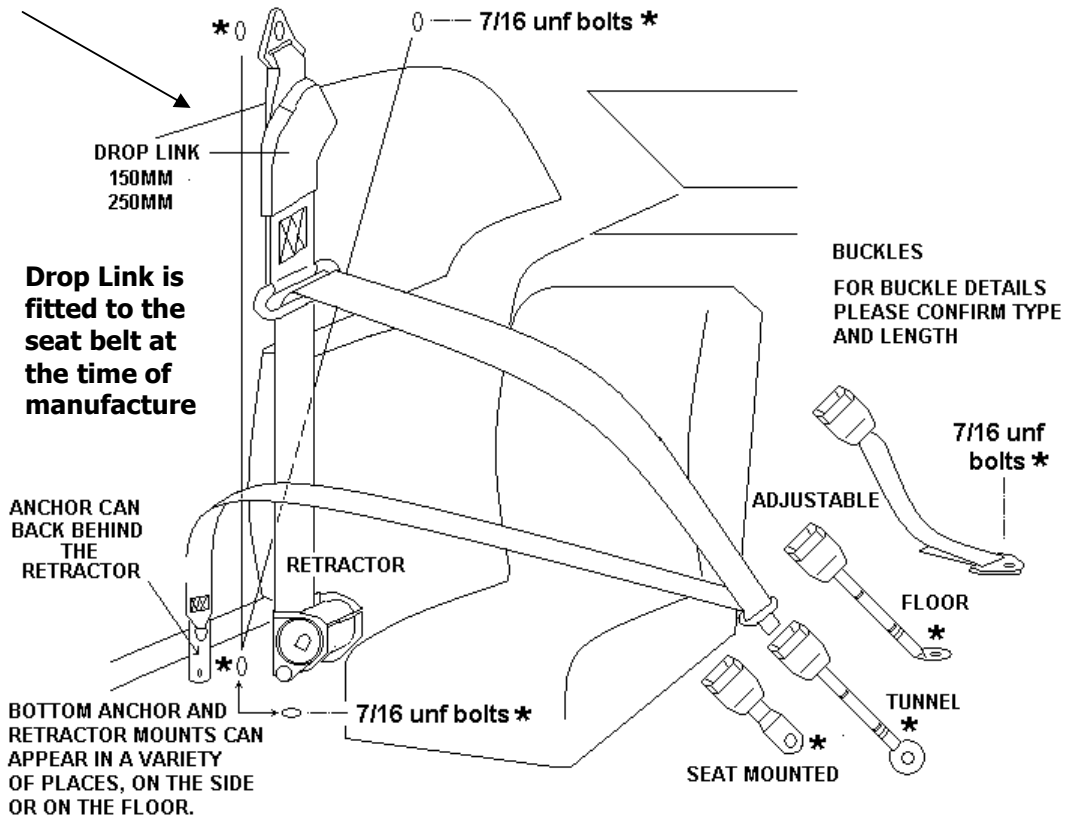
The Drop Link