US010219585B2

(12) **United States Patent**
Taylor

(10) **Patent No.: US 10,219,585 B2**
(45) **Date of Patent: Mar. 5, 2019**

(54) **BELT BUCKLE WITH INTEGRATED TOOL**

(71) Applicant: **SlideBelts Inc.**, El Dorado Hills, CA (US)

(72) Inventor: **Brigham Thomas Taylor**, El Dorado Hills, CA (US)

(73) Assignee: **SLIDEBELTS INC.**, El Dorado Hills, CA (US)

(*) Notice: Subject to any disclaimer, the term of this patent is extended or adjusted under 35 U.S.C. 154(b) by 170 days.

(21) Appl. No.: **15/215,522**

(22) Filed: **Jul. 20, 2016**

(65) **Prior Publication Data**

US 2017/0020234 A1 Jan. 26, 2017

Related U.S. Application Data

(60) Provisional application No. 62/195,205, filed on Jul. 21, 2015.

(51) **Int. Cl.**

A44B 11/00	(2006.01)
A44B 11/20	(2006.01)
B25F 1/00	(2006.01)
A44B 11/12	(2006.01)
A44B 11/06	(2006.01)

(Continued)

(52) **U.S. Cl.**

CPC ***A44B 11/005*** (2013.01); ***A44B 11/006*** (2013.01); ***A44B 11/06*** (2013.01); ***A44B 11/20*** (2013.01); ***A44B 11/2526*** (2013.01); ***A44B 11/2557*** (2013.01); ***B25F 1/00*** (2013.01); ***B25F 1/04*** (2013.01)

(58) **Field of Classification Search**

CPC ... A44B 11/005; A44B 11/2557; A44B 11/06; A44B 11/2526; A44B 11/006; A44B 11/20; A44B 11/12; A44B 11/125; B25F 1/04; B25F 1/00; A41F 9/002; A41F 9/02; Y10S 24/48; Y10T 24/45194; Y10T 24/4016; Y10T 24/4072

See application file for complete search history.

(56) **References Cited**

U.S. PATENT DOCUMENTS

1,578,468 A *	3/1926	Rankin	.....	A44B 11/005 206/101
1,887,825 A *	11/1932	Statham	.....	A41F 1/008 24/593.11
D245,830 S	9/1977	de Gross		

(Continued)

Primary Examiner — Robert Sandy
Assistant Examiner — Rowland Do
(74) *Attorney, Agent, or Firm* — Knobbe, Martens, Olson & Bear, LLP

(57) **ABSTRACT**

The present application includes embodiments for a belt adjustment system. The belt adjustment system can be configured to engage a belt comprising a plurality of belt teeth. The belt engagement system can include a buckle portion that includes a belt clamp configured to couple the belt to the buckle, a lever pivotally movable between a first position and a second position, and a belt-engaging tab, the tooth-engaging tab positionable between a tooth-engaging position and a tooth-disengaging position responsive to the position of the lever on. The belt adjustment system can include a tool housing having a first wall and a second wall that form a slot. A tool comprising a distal end and a proximal end can be coupled to the tool housing, the tool positionable within the slot between a closed position and an open position.

19 Claims, 23 Drawing Sheets

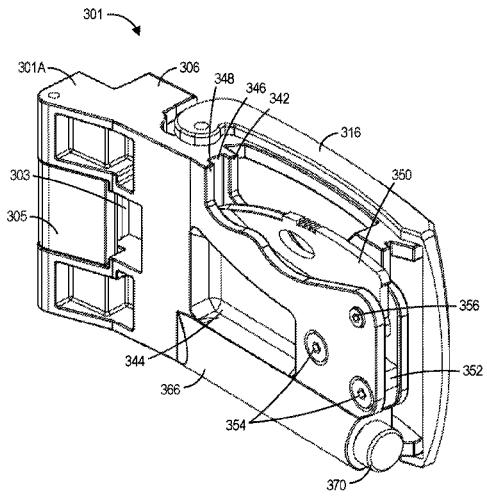

(51) **Int. Cl.**
A44B 11/25 (2006.01)
B25F 1/04 (2006.01)

(56) **References Cited**

U.S. PATENT DOCUMENTS

4,078,272	A *	3/1978	Mahon, III	B26B 1/02	24/186
4,669,155	A *	6/1987	Chen	A41F 9/002	24/170
5,123,579	A *	6/1992	Sugiyama	A44B 11/005	224/163
5,572,747	A *	11/1996	Cheng	A44B 11/12	2/312
5,579,563	A *	12/1996	Sim	A41F 9/002	24/170
5,588,186	A *	12/1996	Ko	A44B 11/14	24/170
5,609,281	A *	3/1997	West	A44B 11/005	224/163
6,145,994	A *	11/2000	Ng	B25F 1/02	206/234
D452,123	S	12/2001	Kelleghan		
D520,825	S	5/2006	Kelleghan		
8,707,490	B1	4/2014	Pelton		
9,149,090	B1 *	10/2015	Taylor	A41F 9/02	
9,277,776	B2 *	3/2016	Laatz	A44B 11/125	
9,351,526	B1 *	5/2016	Taylor	A44B 11/12	
9,615,631	B2 *	4/2017	Laatz	A41F 9/025	
2012/0036618	A1 *	2/2012	Rowland	A41F 9/025	2/311
2013/0167288	A1 *	7/2013	Rowland	A41F 9/002	2/338
2016/0255916	A1 *	9/2016	Ozdowy	A44B 11/005	

* cited by examiner

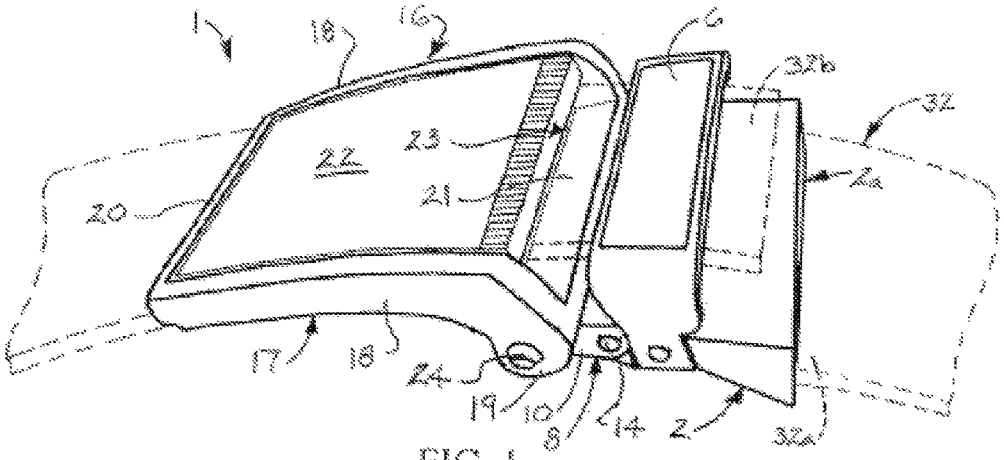
1
18
16
6
32b
32
22
23
21
20
2a
17
18
24
19
10
8
14
2
32a

FIG. 1

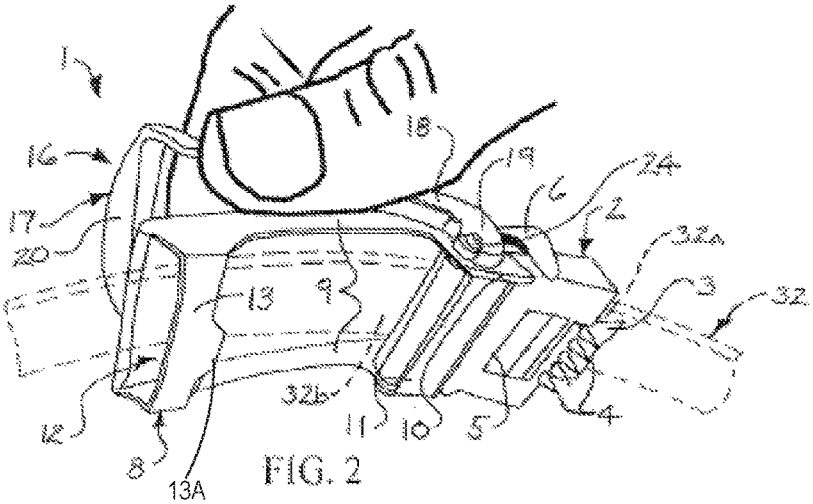
1
18
16
19
24
6
17
2
20
32a
3
32
13
9
32b
11
10
5
4
12
8
13A

FIG. 2

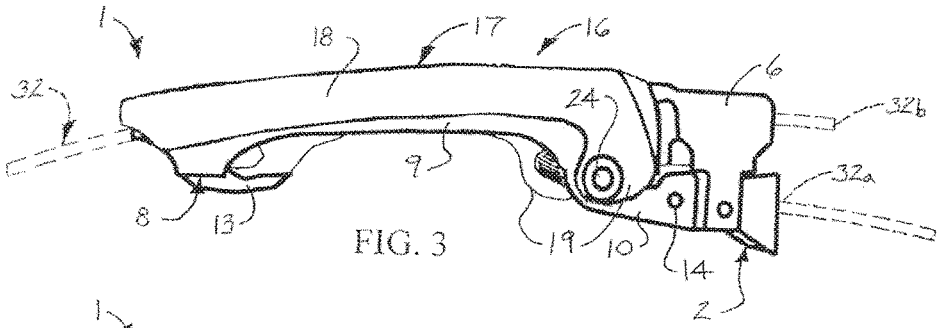

FIG. 3

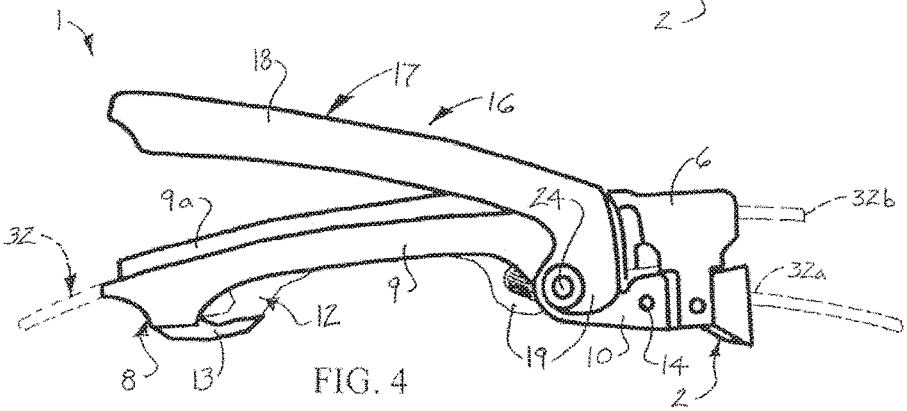

FIG. 4

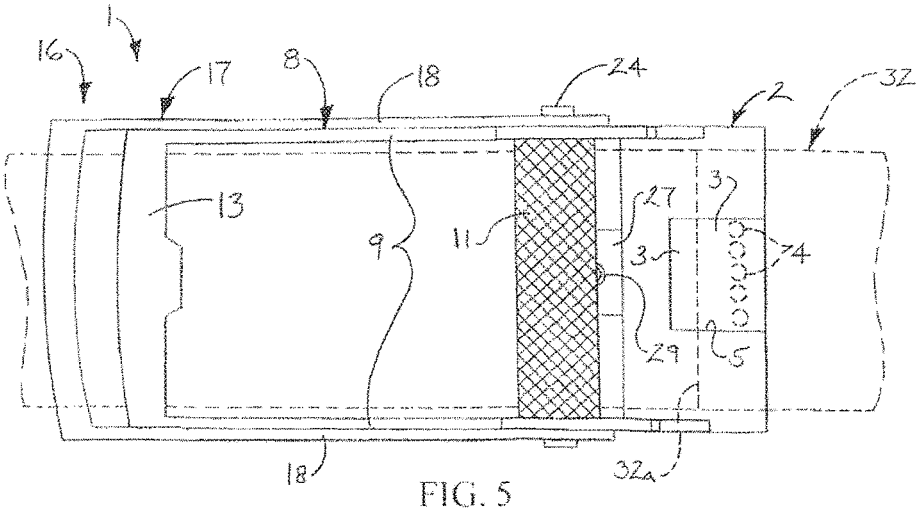

FIG. 5

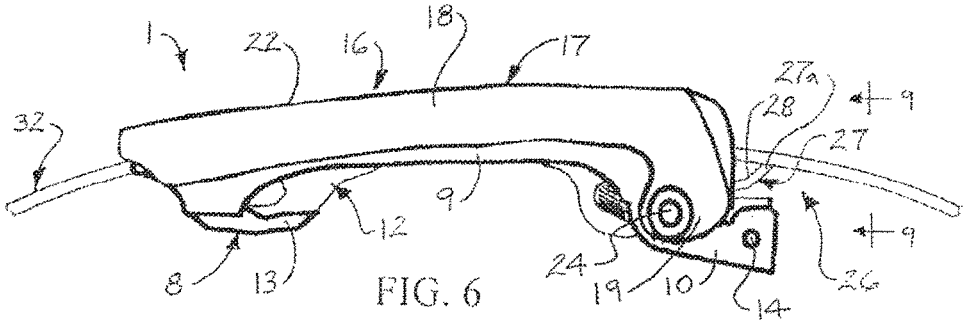

FIG. 6

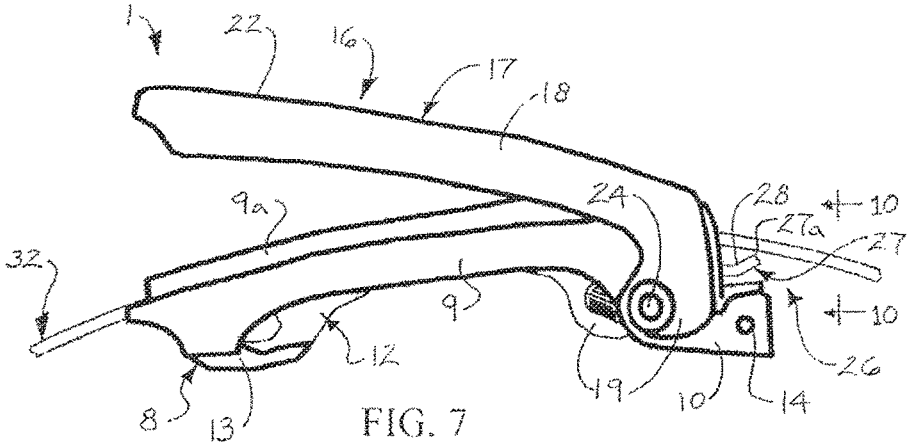

FIG. 7

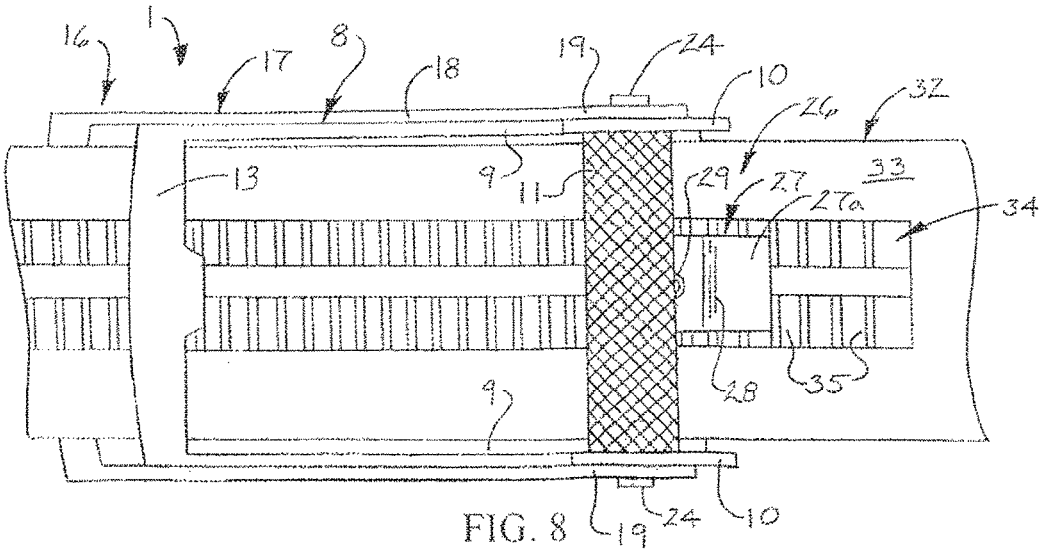

FIG. 8

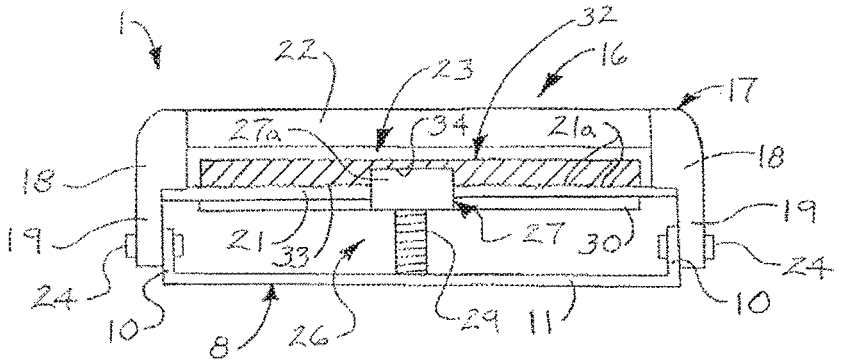
1
22
23
32
16
17
27a
34
21a
18
18
19
19
21
33
27
30
24
24
10
10
8
26
29
11

FIG. 9

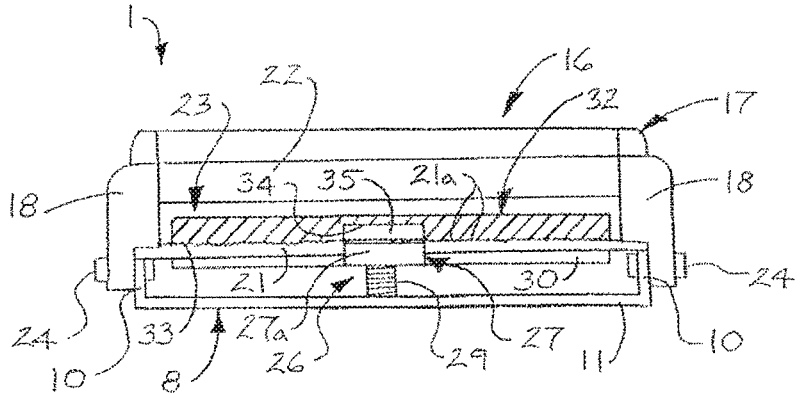
1
16
22
23
32
17
34
35
21a
18
18
21
30
24
24
33
27a
27
10
10
8
26
29
11

FIG. 10

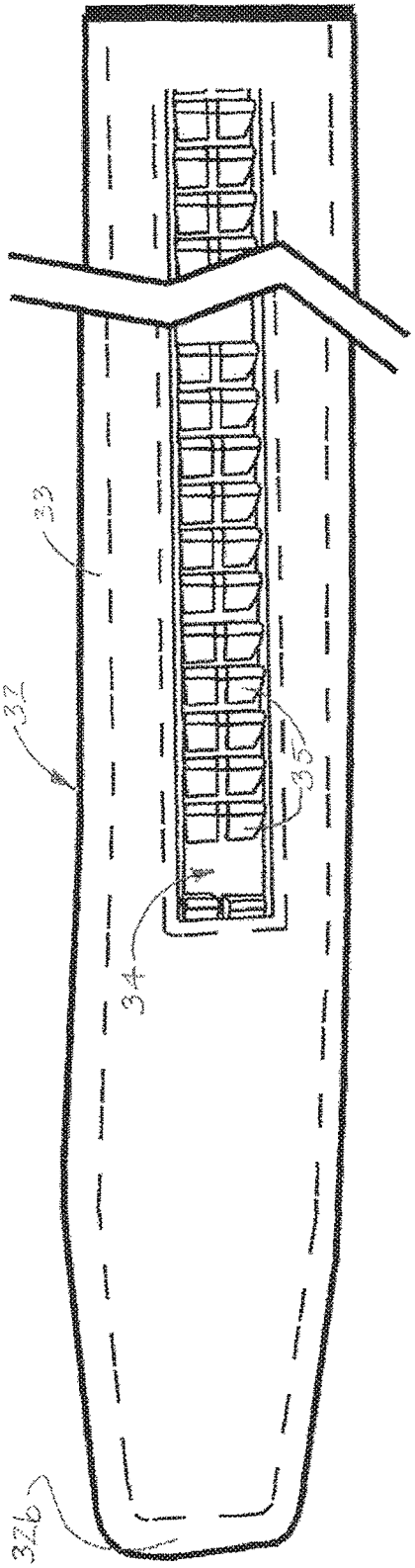

FIG. 11

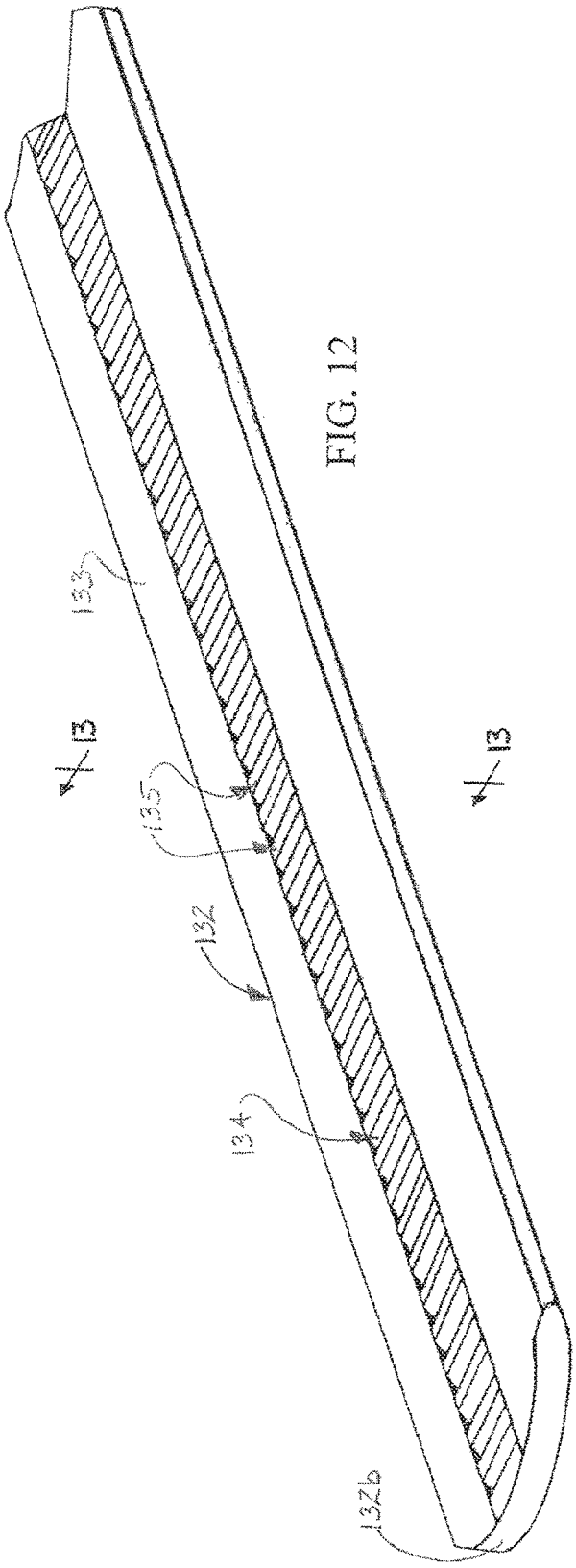

FIG. 12

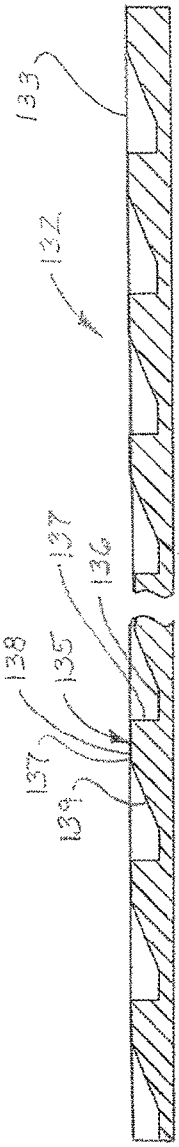

FIG. 13

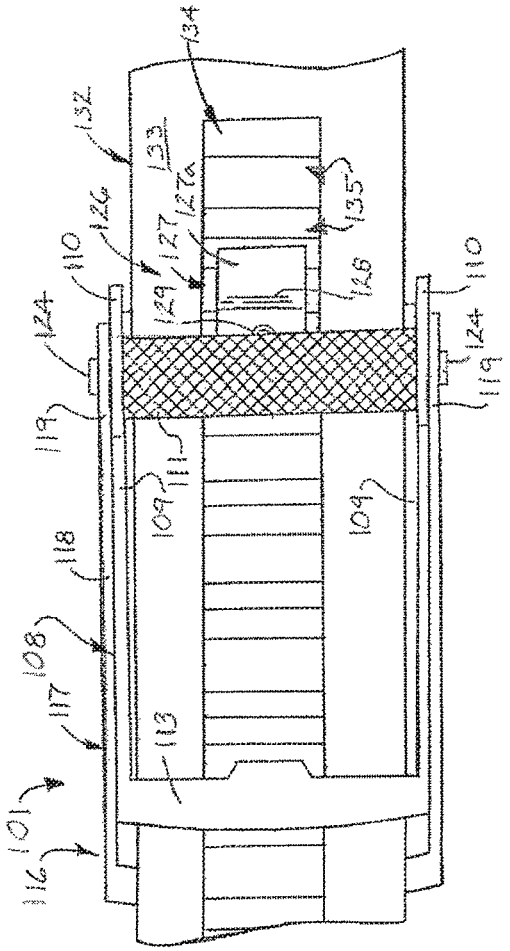
134
132
133
127a
135
126
127
129
128
110
110
124
124
119
119
111
109
109
118
108
117
113
101
116

FIG. 14

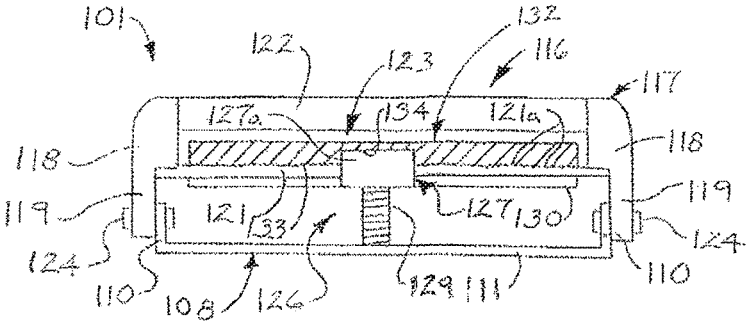

FIG. 14A

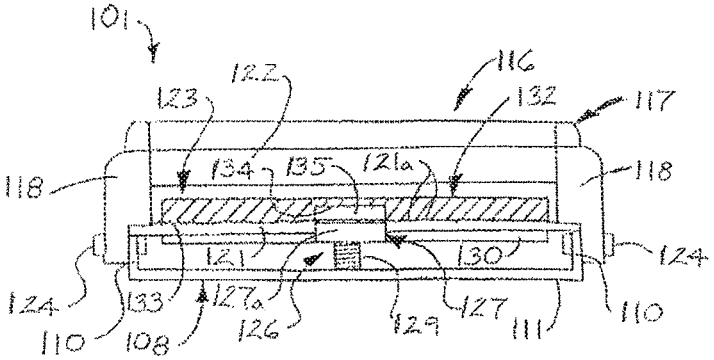

FIG. 14B

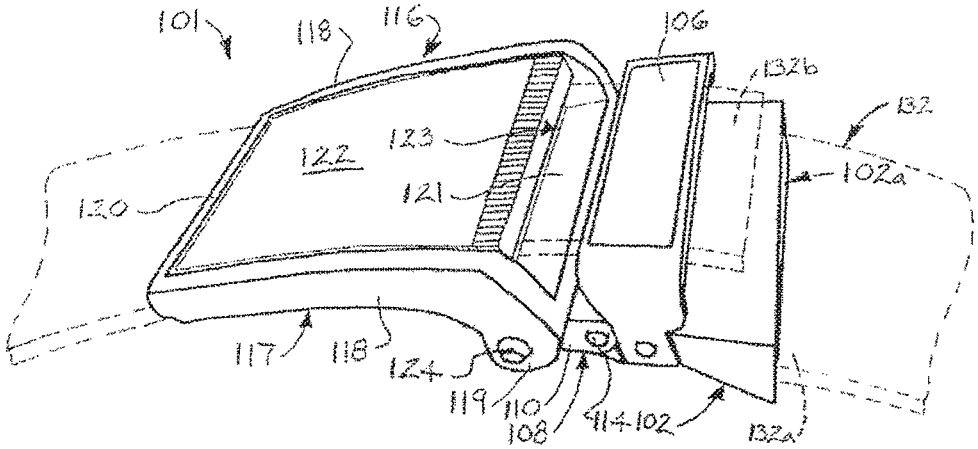

FIG. 14C

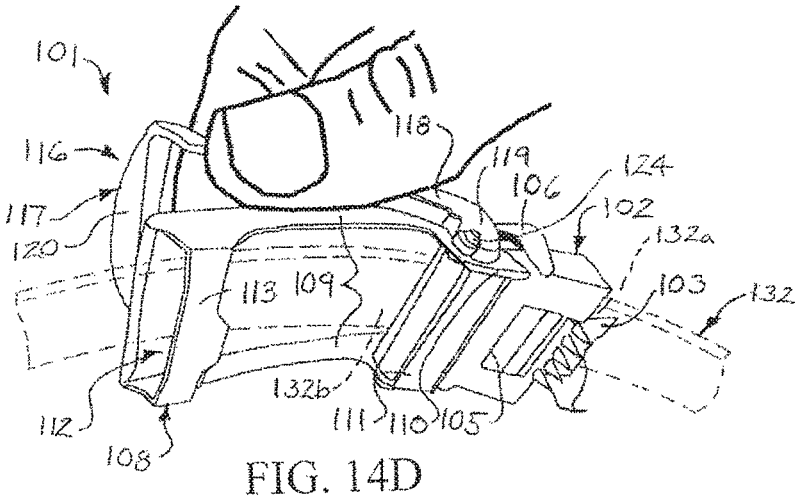

FIG. 14D

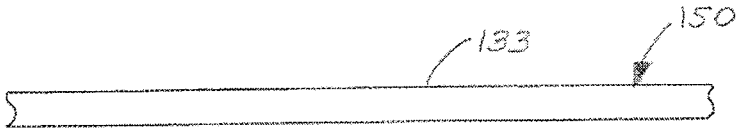

FIG. 15

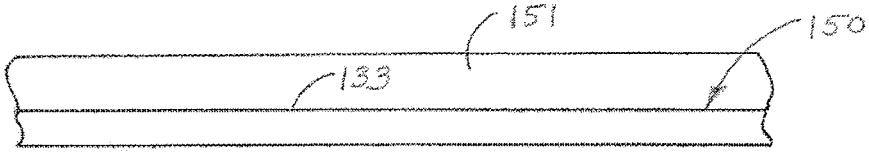

FIG. 16

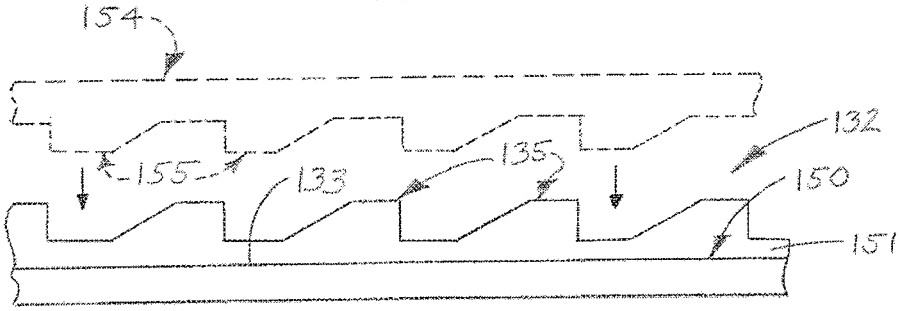

FIG. 17

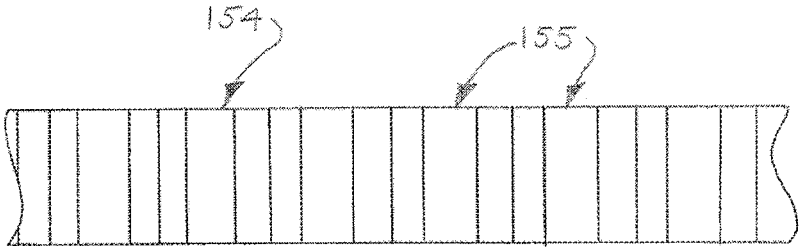

FIG. 18

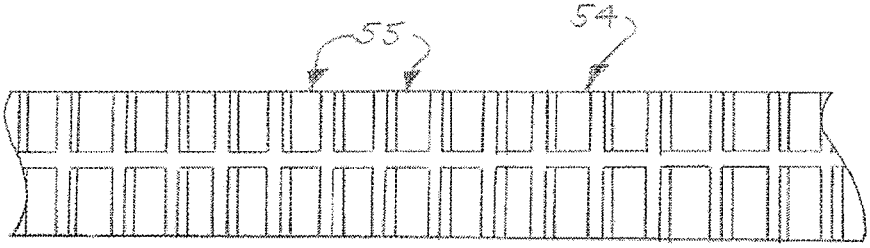

FIG. 19

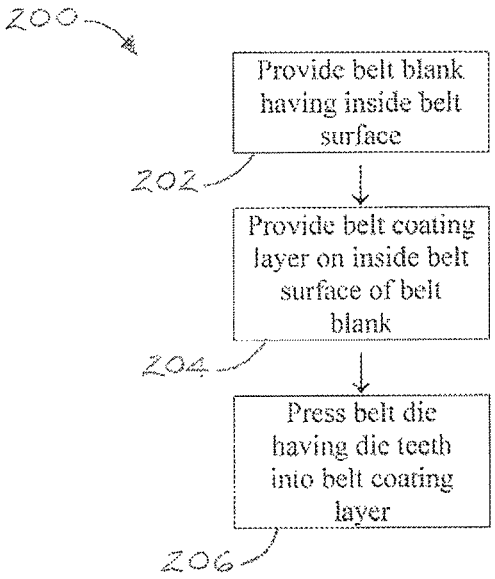
200
Provide belt blank having inside belt surface
202
Provide belt coating layer on inside belt surface of belt blank
204
Press belt die having die teeth into belt coating layer
206

FIG. 20

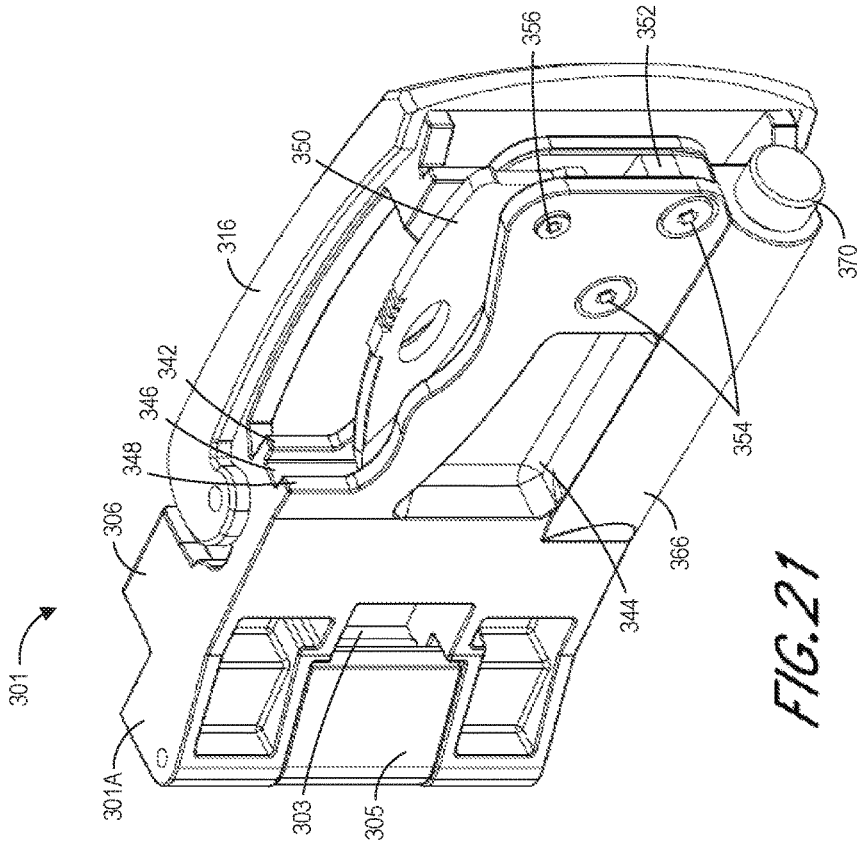

FIG. 21

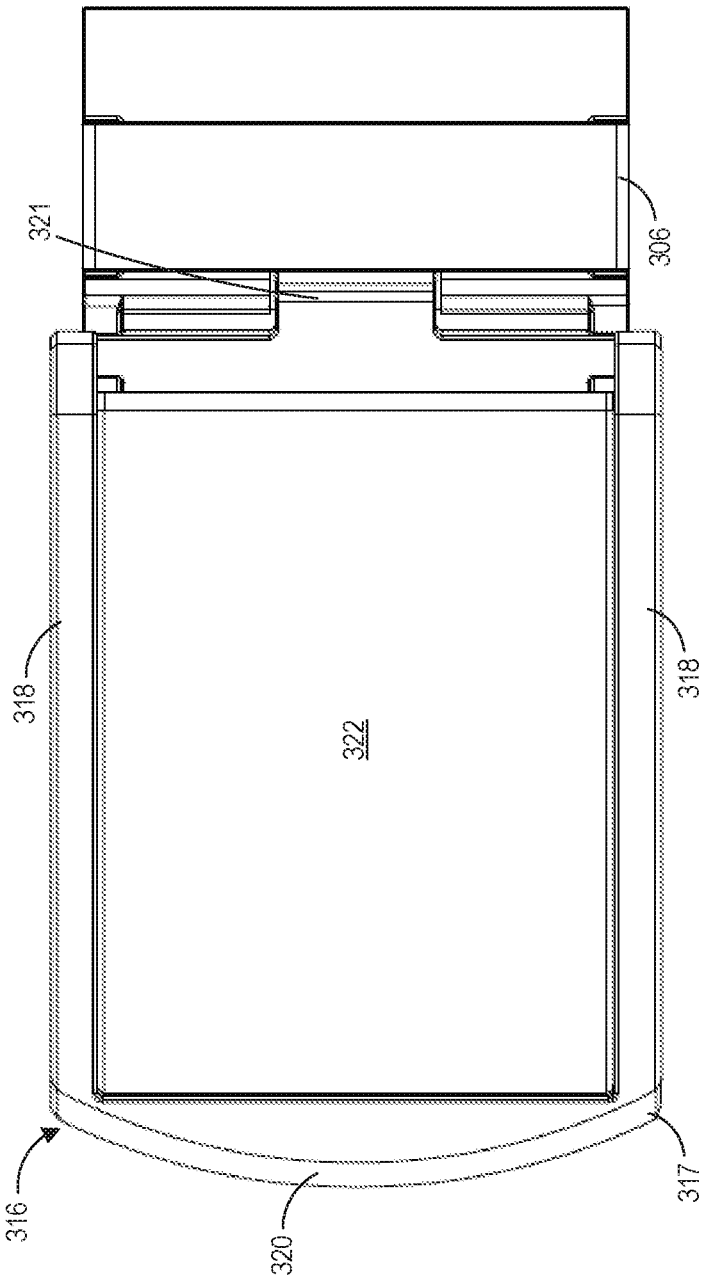

FIG. 22

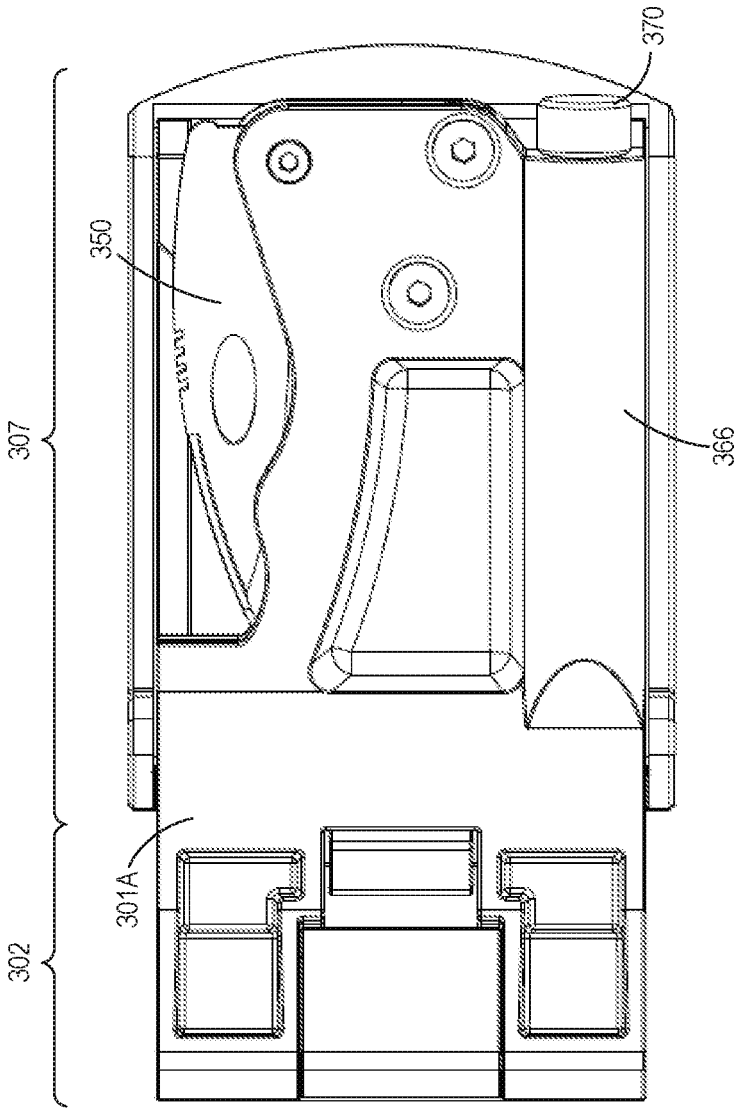

FIG. 23

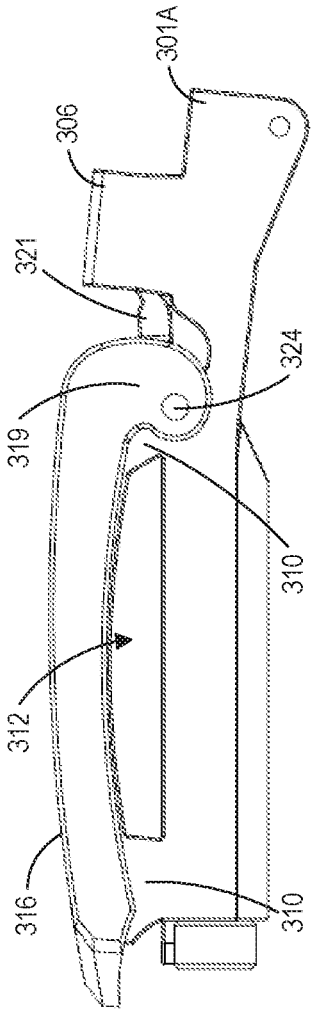
301A
306
321
319
324
310
312
316
310

FIG. 24

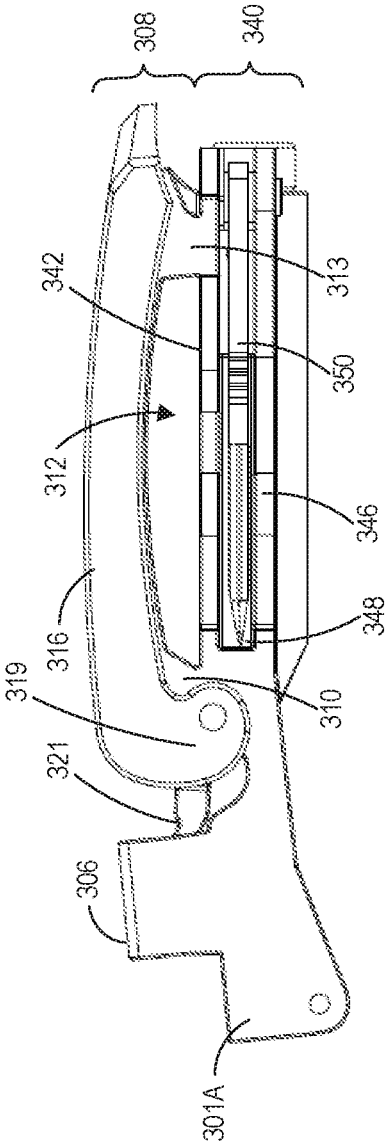
308
340
342
313
350
312
346
316
348
319
310
321
306
301A

FIG. 25

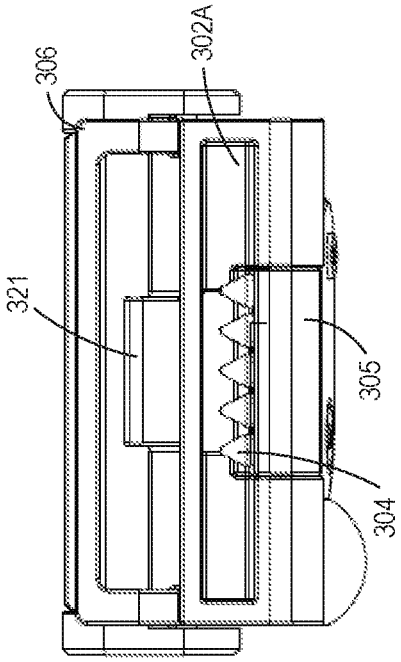

FIG. 27

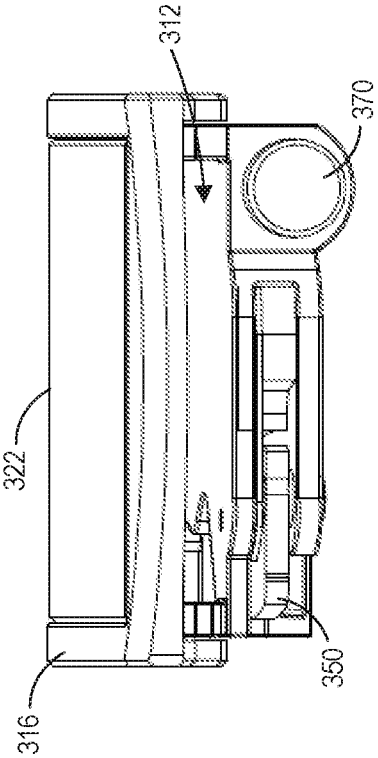

FIG. 26

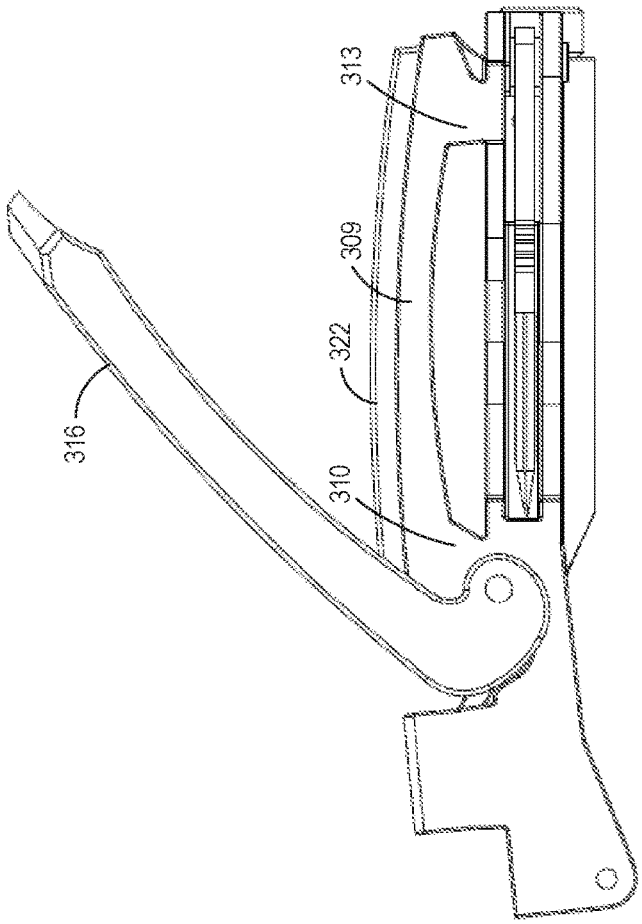

FIG. 28

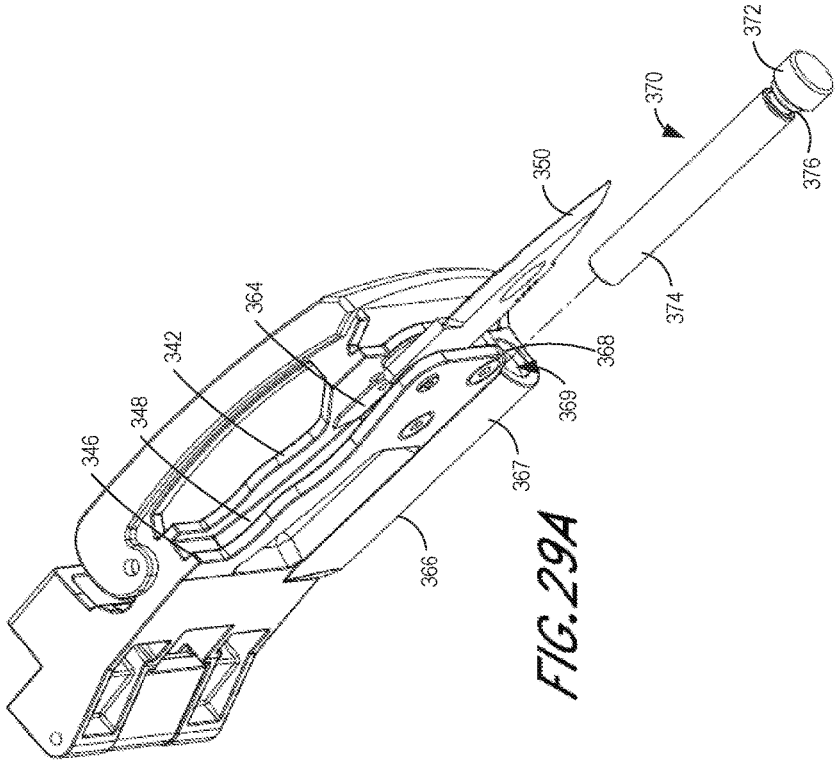

FIG. 29A

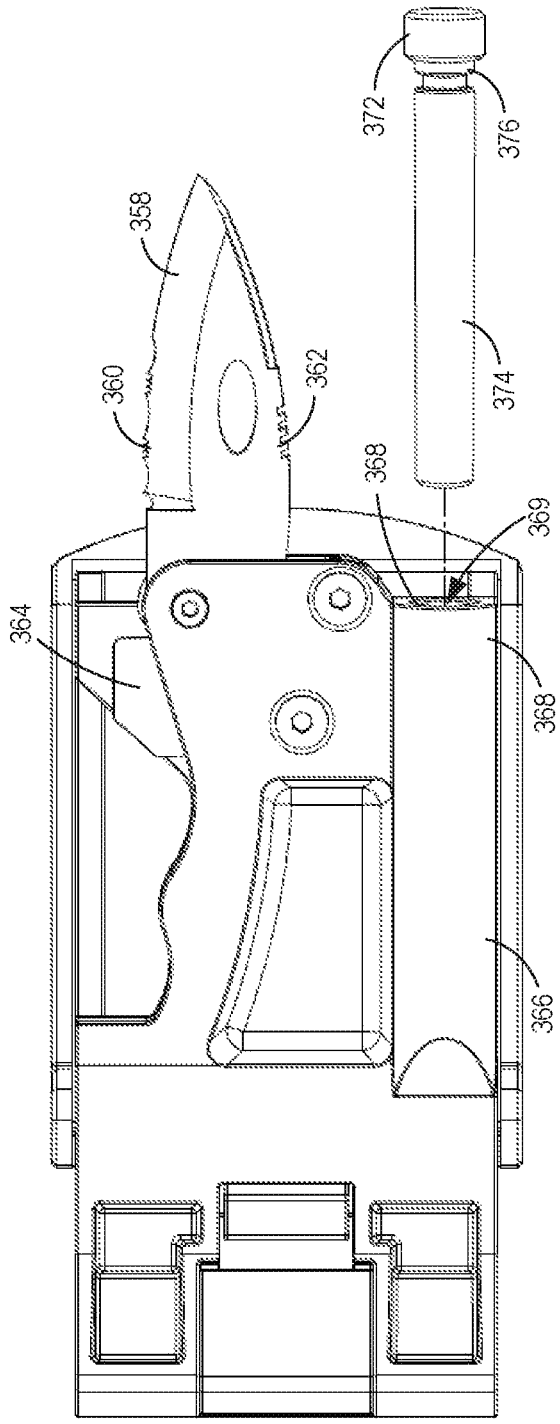

FIG. 29B

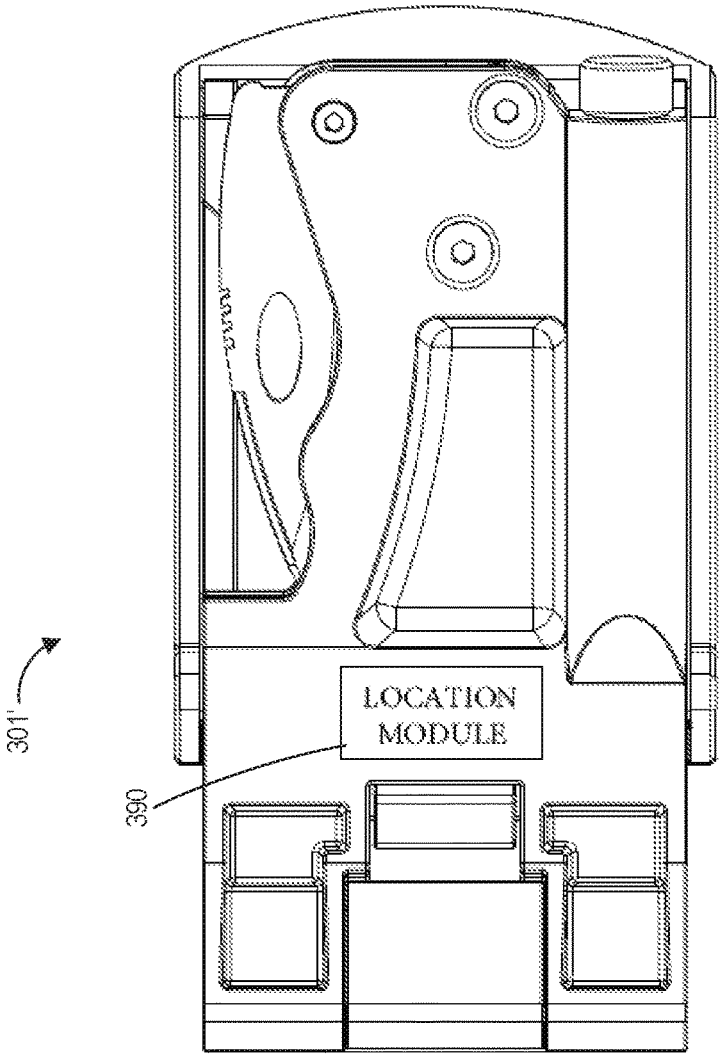

FIG. 30

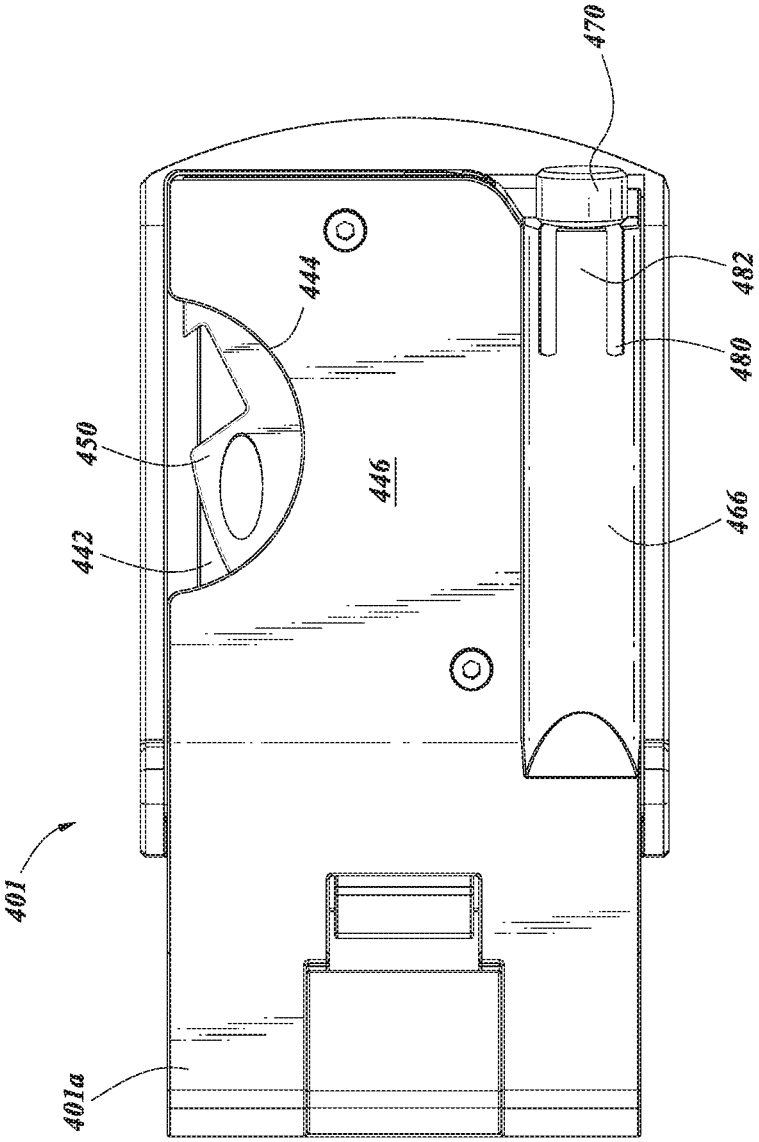

FIG. 31

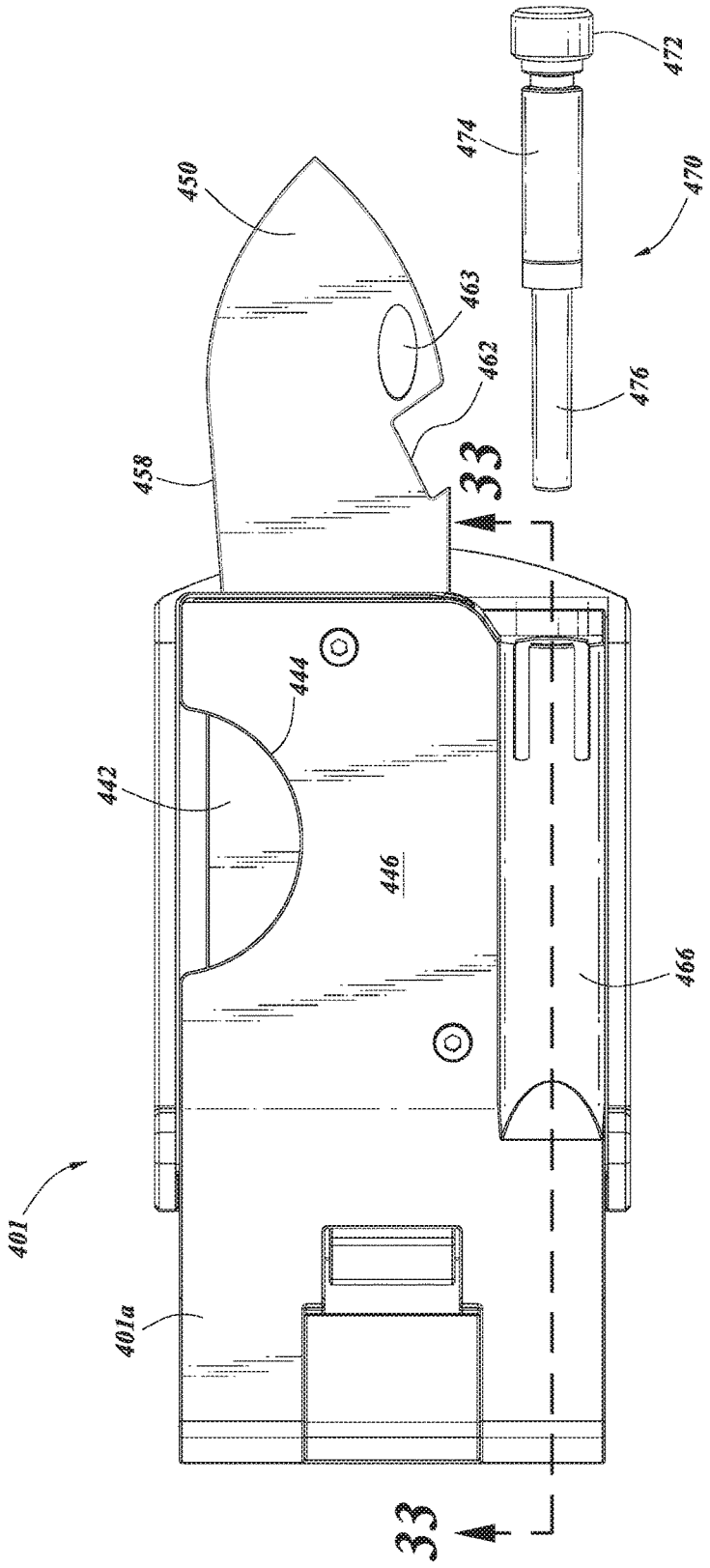

FIG. 32

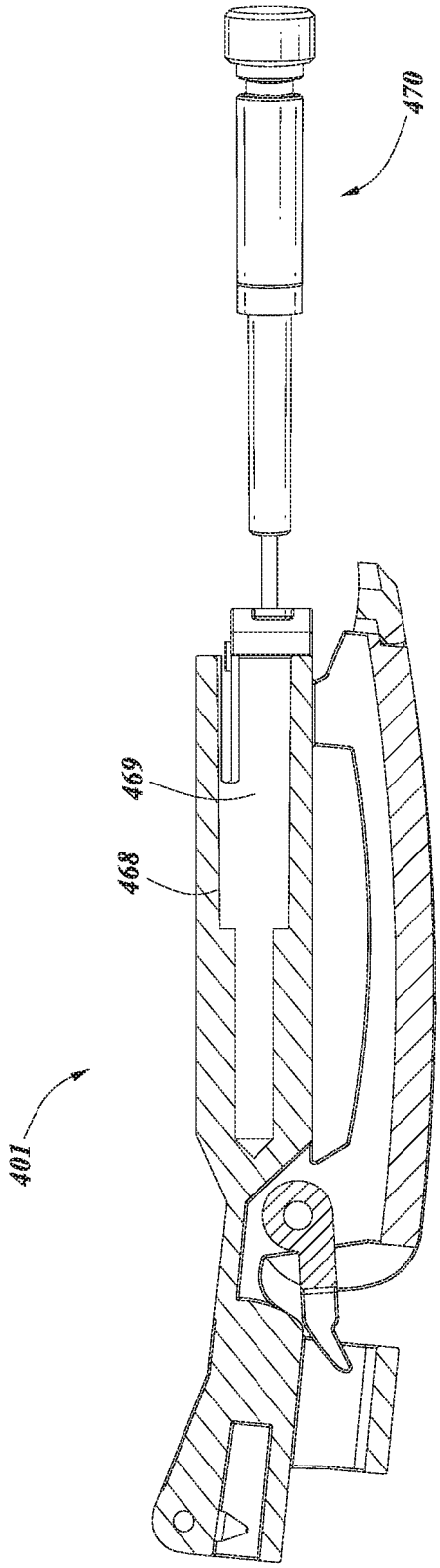

FIG. 33

BELT BUCKLE WITH INTEGRATED TOOL

INCORPORATION BY REFERENCE TO ANY PRIORITY APPLICATIONS

Any and all applications for which a foreign or domestic priority claim is identified in the Application Data Sheet as filed with the present application are hereby incorporated by reference under 37 CFR 1.57.

BACKGROUND

Conventional belt adjustment systems may utilize a single lever which actuates an adjustment mechanism that interacts with grooved teeth on a belt. Such an adjustment mechanism allows the belt to be adjusted along a continuum of diameters to accommodate waists of corresponding sizes. However, utilization of a single lever to actuate the adjustment mechanism may be cumbersome for some users. Due to the manner in which the adjustment mechanism interacts with the teeth in the belt, the user may be required to depress the lever of the buckle with extreme force while dislodging the belt from the adjustment mechanism in a back-and-forth motion.

SUMMARY OF SOME EMBODIMENTS

The systems, methods, and devices of this disclosure each have several innovative aspects, no single one of which is solely responsible for the all of the desirable attributes disclosed herein.

One embodiment discloses a belt adjustment system, comprising: a belt comprising a plurality of belt teeth; a buckle comprising: a belt clamp configured to couple the belt to the buckle; a lever movable between a first position and a second position; a tooth-engaging tab, the tooth-engaging tab positionable between a tooth-engaging position when the lever is in the first position, and a tooth-disengaging position the lever is in the second position; a tool housing comprising a first wall and a second wall, a slot formed between the first wall and the second wall; and a tool comprising a distal end and a proximal end, wherein the proximal end is coupled to the tool housing, the tool positionable between a closed position and an open position.

Another embodiment discloses a belt adjustment system, comprising: a buckle frame portion comprising: a belt clamp configured to couple a belt to the belt adjustment system; a lever movable between a first position and a second position; a belt-engaging tab, the belt-engaging tab positionable between a belt-engaging position when the lever is in the first position, and a belt-disengaging position the lever is in the second position, wherein the belt-engaging tab is configured to engage a belt positioned within a belt space of the belt adjustment system; a tool housing portion comprising: a first wall and a second wall, a slot formed between the first wall and the second wall; and a tool comprising a distal end and a proximal end, wherein the proximal end is coupled to the tool housing, the tool positionable between a closed position and an open position.

Although certain embodiments and examples are disclosed herein, inventive subject matter extends beyond the examples in the specifically disclosed embodiments to other alternative embodiments and/or uses, and to modifications and equivalents thereof.

BRIEF DESCRIPTION OF THE DRAWINGS

Illustrative embodiments of the disclosure will now be described, by way of example, with reference to the accompanying drawings, in which:

FIG. **1** is a top perspective view of an illustrative embodiment of the belt adjustment system provided on a belt;

FIG. **2** is a bottom perspective view of an illustrative embodiment of the belt adjustment system provided on a belt;

FIG. **3** is a side view of an illustrative embodiment of the belt adjustment system provided on a belt and deployed in a belt-securing configuration;

FIG. **4** is a side view of an illustrative embodiment of the belt adjustment system, provided on a belt and deployed in a belt-releasing configuration;

FIG. **5** is a bottom view of an illustrative embodiment of the belt adjustment system, provided on a belt;

FIG. **6** is a side view of an illustrative embodiment of the belt adjustment system provided on a belt and deployed in the belt-securing configuration, with a belt clamp removed from the belt adjustment system for clarity;

FIG. **7** is a side view of an illustrative embodiment of the belt adjustment system provided on a belt and deployed in the belt-releasing configuration, with the belt clamp removed from the belt adjustment system for clarity;

FIG. **8** is a bottom view of an illustrative embodiment of the belt adjustment system provided on a belt;

FIG. **9** is a front view, taken along viewing lines **9-9** in FIG. **6**, of an illustrative embodiment of the belt adjustment system deployed in the belt-securing configuration;

FIG. **10** is a front view, taken along viewing lines **10-10** in FIG. **7**, of an illustrative embodiment of the belt adjustment system deployed in the belt-releasing configuration;

FIG. **11** is a view of the inside surface of an exemplary belt, partially in section, which is suitable for implementation of an illustrative embodiment of the belt adjustment system;

FIG. **12** is a perspective view of the inside surface of an alternative exemplary belt, partially in section, which is suitable for implementation of an illustrative embodiment of the belt adjustment system;

FIG. **13** is a longitudinal sectional view, taken along section lines **13-13** in FIG. **12**;

FIG. **14** is a bottom view of an illustrative embodiment of the belt adjustment system, provided on the belt illustrated in FIGS. **12** and **13**;

FIG. **14**A is a front view of an illustrative embodiment of the belt adjustment system, provided on the belt illustrated in FIGS. **12** and **13** and deployed in the belt-securing configuration;

FIG. **14**B is a front view of an illustrative embodiment of the belt adjustment system provided on the belt illustrated in FIGS. **12** and **13** and deployed in the belt-releasing configuration;

FIG. **14**C is a top perspective view of an illustrative embodiment of the belt adjustment system provided on the belt illustrated in FIGS. **12** and **13** (illustrated in phantom);

FIG. **14**D is a bottom perspective view of an illustrative embodiment of the belt adjustment system provided on the belt illustrated in FIGS. **12** and **13** (illustrated in phantom);

FIGS. **15-17** illustrate sequential fabrication of a belt according to an illustrative embodiment of a belt fabrication method;

FIG. **18** is an inside surface view of an exemplary die which is suitable for fabrication of the belt illustrated in FIGS. **12** and **13** according to an illustrative embodiment of a belt fabrication method;

FIG. **19** is an inside surface view of an exemplary die which is suitable for fabrication of the belt illustrated in FIG. **11** according to an illustrative embodiment of a belt fabrication method; and

FIG. **20** is a flow diagram of an illustrative embodiment of a belt fabrication method;

FIG. **21** is a bottom perspective view of an illustrative embodiment of the belt adjustment system;

FIG. **22** is a top view of an illustrative embodiment of the belt adjustment system;

FIG. **23** is a bottom view of an illustrative embodiment of the belt adjustment system;

FIG. **24** is a left side view of an illustrative embodiment of the belt adjustment system;

FIG. **25** is a right side view of an illustrative embodiment of the belt adjustment system;

FIG. **26** is a front end view of an illustrative embodiment of the belt adjustment system;

FIG. **27** is a back end view of an illustrative embodiment of the belt adjustment system;

FIG. **28** is a right side view of an illustrative embodiment of the belt adjustment system with the lever in an actuated position;

FIGS. **29**A and **29**B are views of an illustrative embodiment of the belt adjustment system with the tool in an open position and the cavity tool removed from the cavity;

FIG. **30** is a bottom view of an illustrative embodiment of the belt adjustment system with a location module;

FIG. **31** is a bottom view of another illustrative embodiment of a belt adjustment system;

FIG. **32** is a view of an illustrative embodiment of the belt adjustment system of FIG. **31** with the tool in an open position and the cavity tool removed from the cavity;

FIG. **33** is a cross section view of illustrative embodiment of the belt adjustment system of FIG. **32**.

DETAILED DESCRIPTION OF EMBODIMENTS

The following detailed description is merely exemplary in nature and is not intended to limit the described embodiments or the application and uses of the described embodiments. As used herein, the word "exemplary" or "illustrative" means "serving as an example, instance, or illustration." Any implementation described herein as "exemplary" or "illustrative" is nonlimiting and is not necessarily to be construed as preferred or advantageous over other implementations. All of the implementations described below are exemplary implementations provided to enable persons skilled in the art to practice the disclosure and are not intended to limit the scope of the appended claims. Moreover, the illustrative embodiments described herein are not exhaustive and embodiments or implementations other than those which are described herein and which can be claimed. Furthermore, there is no intention to be bound by any expressed or implied theory presented in the preceding technical field, background, brief summary or the following detailed description. Relative terms such as "front" and "rear" as used herein are intended for descriptive purposes only and are not necessarily intended to be construed in a limiting sense.

Referring to the drawings, an illustrative embodiment of the belt adjustment system is generally indicated by reference numeral **1**. As will be hereinafter described, the belt adjustment system **1** facilitates ease and convenience for a user (not illustrated) in selective adjustment of a belt **32** around the waist of a user. As illustrated in FIGS. **8** and **11**, the belt **32** may have an inside belt surface **33** which faces the waist of the user. An elongated belt groove **34** extends along at least a portion of the inside belt surface **33**. Multiple, spaced-apart belt teeth **35**, which may be plastic or other material, are provided in the belt groove **34**. The belt adjustment system **1** engages the belt teeth **35** in the belt groove **34** to secure the belt **32** at a selected diameter around the waist of the user, as will be hereinafter further described.

As illustrated in FIGS. **1-5**, the belt adjustment system **1** includes a belt clamp **2**. In some embodiments, the belt clamp **2** may have a belt clamp interior **2***a* (FIG. **1**). A tab opening **5** (FIG. **2**) in the belt clamp **2** may communicate with the clamp interior **2***a*. A belt tooth tab **3** may be pivotally attached to the belt clamp **2** adjacent to the tab opening **5**. Multiple belt teeth **4** may extend from the belt tooth tab **3**. The belt tooth tab **3** may be positional between an open, belt-releasing configuration illustrated in FIG. **2**, in which the belt tooth tab **3** is unseated from the tab opening **5** and the belt teeth **4** are disposed outside the belt clamp interior **2***a*, and a closed, belt-engaging configuration (FIG. **1**) in which the belt tooth tab **3** is seated in the tab opening **5** and the belt teeth **4** extend into the belt clamp interior **2***a*. In use of the belt adjustment system **1**, which will be hereinafter described, the belt teeth **4** are adapted to engage and secure an attachment end **32***a* of the belt **32** (illustrated in phantom) which is inserted in the belt clamp interior **2***a* of the belt clamp **2** to attach the belt adjustment system **1** to the belt **32**. A belt stay **6** may be attached to the belt clamp **2** to secure a free adjustable end **32***b* of the belt **32**, as will be hereinafter described. In other embodiments, the belt clamp **2** may have any design which facilitates attachment of the belt adjustment system **1** to the attachment end **32***a* of the belt **32** according to the knowledge of those skilled in the art.

A buckle **8** is attached to the belt clamp **2**. As illustrated in FIG. **2**, the buckle **8** may include a pair of elongated, parallel, spaced-apart side buckle members **9** which terminate in a pair of buckle flanges **10**, respectively. The buckle flanges **10** may be attached to opposite sides of the belt clamp **2** such as via a pair of buckle fasteners **14**. As further illustrated in FIG. **2**, a front connecting member **11** and a rear connecting member **13** may extend between the side buckle members **9** in generally parallel, spaced-apart relationship to each other. The side buckle members **9**, the front connecting member **11** and the rear connecting member **13** together form a belt space **12** which accommodates the adjustment end **32***b* of the belt **32**. In some embodiments, a pair of lever seat flanges **9***a* (one of which is illustrated in FIG. **4**) may extend from the respective side buckle members **9** for purposes which will be hereinafter described.

A lever **16** is pivotally attached to the buckle **8**. As illustrated in FIG. **1**, the lever **16** may include a lever frame **17** which may be generally elongated and rectangular. The lever frame **17** may have a pair of generally elongated, parallel, spaced-apart side lever frame members **18** which terminate in a pair of lever frame flanges **19**. The lever frame flanges **19** may be pivotally attached to the buckle flanges **10**, respectively, of the buckle **8** via pivot pins **24**. A connecting frame member **20** may extend between the spaced-apart rear ends of the side lever frame members **18**. As illustrated in FIG. **1**, a belt engaging member **21** extends between the spaced-apart lever frame flanges **19** on the respective front ends of the side lever frame members **18**. Accordingly, as the lever **16** is pivoted between the belt-securing configuration illustrated in FIGS. **3** and **9** and the belt-releasing configuration illustrated in FIGS. **4** and **10**, the belt engaging member **21** pivots along with the lever **16**. A lever plate **22** may be mounted in the lever frame **17**. As illustrated in FIGS. **9** and **10**, a belt slot **23** may be formed by and between the side lever frame members **18**, the belt-engaging member **21**, and the lever plate **22**. The belt slot **23** is sized and configured to accommodate the belt **32** in use of the belt adjustment system **1**. Multiple serrations

21*a* may be provided on the belt engaging member **21** in facing relationship to the belt slot **23**.

As further illustrated in FIGS. **9** and **10**, a belt engaging assembly **26** may include a tab plate **30** which is provided on the belt engaging member **21**. A generally elongated tooth-engaging tab **27** having a distal tab end **27***a* extends from the tab plate **30**. As illustrated in FIGS. **6** and **7**, the tooth-engaging tab **27** may have a tab bend **28**, from which the angled distal tab end **27***a* extends forwardly. When the lever **16** is deployed in the belt-securing configuration illustrated in FIG. **9**, the distal tab end **27***a* is disposed adjacent to the belt slot **23** and inserts in the belt groove **34** in the inside belt surface **33** of the belt **32** and engages one of the belt teeth **35**, preventing movement of the belt **32** through the belt slot **23** and the belt space **12** of the buckle **8**. Conversely, when the lever **16** is deployed in the belt-releasing configuration illustrated in FIG. **10**, the distal tab end **27***a* of the tooth-engaging tab **27** clears the belt slot **23** and disengages the belt groove **34** and the belt teeth **35**, facilitating free back-and-forth movement of the belt **32** through the belt slot **23** and the belt space **12**.

A tab biasing mechanism such as a coiled tab spring **29**, for example and without limitation, is sandwiched between the front connecting member **11** of the buckle **8** and the tab plate **30**. Accordingly, the tab spring **29** normally biases the tooth-engaging tab **27** in the groove insert position illustrated in FIG. **9** and the lever **16** in the buckle-engaging configuration illustrated in FIGS. **3** and **6**. Conversely, the lever **16** can be selectively pivoted against the bias which is imparted by the tab spring **29** to the buckle-disengaging configuration illustrated in FIGS. **4** and **7** such that the tooth-engaging tab **27** disengages the belt groove **34** and the belt teeth **35** in the belt **32**. When the lever **16** is deployed in the buckle-engaging configuration, the spaced-apart side lever frame members **18** of the lever frame **17** may be nested on the outsides of the lever seat flanges **9***a*, respectively, on the buckle **8**.

In exemplary use of the belt adjustment system **1**, the attachment end **32***a* of the belt **32** is inserted in the belt clamp interior **2***a* of the belt clamp **2** with the clamp tooth tab **3** initially disposed in the open configuration illustrated in FIG. **2**. The clamp tooth tab **3** is then pivoted to the closed position illustrated in FIG. **5** such that the clamp teeth **4** extend into the belt clamp interior **2***a* and engage and secure the attachment end **32***a* of the belt **32** in the belt clamp **2**. The free adjustable end **32***b* and the remaining unsecured portion of the belt **32** may then be inserted through belt loops (not illustrated) in the pants of a user typically in the conventional manner.

The tab spring **29** normally biases the tooth-engaging tab **27** in the tooth-engaging position illustrated in FIG. **9** and the lever **16** in the buckle-engaging position illustrated in FIGS. **3** and **6**. Therefore, the lever **16** is manually pivoted to the buckle-disengaging position illustrated in FIGS. **4** and **7** such that the tooth-engaging tab **27** is deployed in the tooth-disengaging position illustrated in FIG. **10** to enable free passage of the belt **32** through the belt slot **23** and the belt space **12** of the belt adjustment system **1**. Accordingly, the free adjustable end **32***b* of the belt **32** is inserted through the belt space **12** in the buckle **8** and then through the registering belt slot **23** (FIG. **9**) and the belt stay **6**, respectively, on the belt clamp **2**. The lever **16** is then released such that the tab spring **29** returns the lever **16** to the buckle-engaging position such that the distal tab end **27***a* of the tooth-engaging tab **27** inserts into the belt groove **34** and engages one of the belt teeth **35** (FIG. **8**) in the belt groove **34**. Therefore, the tooth-engaging tab **27** prevents further movement of the belt **32** through the belt slot **23** and secures the belt **32** at a selected size or diameter around the waist of the user. The user can selectively subsequently pivot the lever **16** against the bias imparted by the tab spring **29** to the buckle-disengaging position to disengage the tooth-engaging tab **27** from the belt teeth **35** and the belt groove **34** and facilitate free movement of the adjustable end **32***b* of the belt **32** through the belt slot **23** until the belt **32** is tightened or loosened according to the preferences of the user. The lever **16** can subsequently again be released such that the tab spring **29** returns the tooth-engaging tab **27** to the tooth-engaging position in the belt groove **34** and the lever **16** to the buckle-engaging position to secure the belt **32** at the selected size or diameter.

It will be appreciated by those skilled in the art that the belt adjustment system **1** allows a user to actuate the lever **16** with one hand to selectively tighten or loosen the belt **32**. The belt adjustment system **1** can be selectively removed from the belt **32** by disengaging the clamp teeth **4** on the clamp tooth tab **3** from the attachment end **32***a* of the belt **32**, pivoting the lever **16** to the belt-releasing position and sliding the adjustable end **32***b* of the belt **32** from the belt slot **23** (FIGS. **9** and **10**) and the belt space **12** (FIG. **2**).

Referring next to FIGS. **12-14**D of the drawings, an alternative belt which is suitable for implementation of an illustrative embodiment of the belt adjustment system **101** (FIG. **14**) is generally indicated by reference numeral **132**. The belt adjustment assembly **101** may have a design which is the same as or similar to that of the assembly **1** that was heretofore described with respect to FIGS. **1-11**. Accordingly, in the belt adjustment assembly **101**, elements which are analogous to the respective elements of the assembly **1** are designated by the same numeral in the **100** series in FIGS. **12-14**. A belt **132** which is suitable for implementation of the belt adjustment system **101** includes an inside belt surface **133**. A generally elongated, rectangular belt groove **134** is provided in the inside belt surface **133**. Multiple belt teeth **135** are provided in the belt groove **134**. The belt teeth **135** may span the width of the belt groove **134** in adjacent, spaced-apart relationship to each other. As illustrated in FIG. **13**, in some embodiments, belt adjustment slots **136** may separate adjacent belt teeth **135** from each other in the belt groove **134**. Each belt tooth **135** may include a generally flat or planar tab stop surface **137** which is generally perpendicular to a plane of the inside belt surface **133**, a generally flat or planar tooth outer surface **138** which extends forwardly from the tab stop surface **137** and is generally parallel to the plane of the inside belt surface **133** and a sloped or beveled tab slide surface **139** which extends forwardly from the tooth outer surface **138** and is opposite the tab stop surface **137** and sloped relative to the inside belt surface **133**.

Exemplary use of the belt adjustment system **101** may be as was heretofore described with respect to the belt adjustment system **1**. The tab spring **129** normally biases the tooth-engaging tab **127** in the tooth-engaging position and the lever **116** in the buckle-engaging position (FIGS. **3** and **6**). Therefore, the lever **116** is manually pivoted to the buckle-disengaging position (FIGS. **4** and **7**) such that the tooth-engaging tab **127** is deployed in the tooth-disengaging position (FIG. **10**) to enable free passage of the belt **132** through the belt slot **123** of the belt adjustment system **101**. The lever **116** is released such that the tab spring **129** returns the lever **116** to the buckle-engaging position and the distal tab end **127***a* of the tooth-engaging tab **127** inserts into the belt groove **134** and engages the tab stop surface **137** (FIG. **13**) of one of the belt teeth **135** in the belt groove **134**.

Therefore, the tooth-engaging tab **127** prevents further movement of the belt **132** and secures the belt **132** at a selected size or diameter around the waist of the user. The user can selectively pull the belt **132** through the belt slot **123** of the belt adjustment system **101** to tighten the belt **132** around the waist of the user without pivoting the lever **116** such that the tooth-engaging tab **127** slides along the tab slide surfaces **139** of the respective belt teeth **135** and catches on the tab stop surface **137** of one of the belt teeth **135** to stop the belt **132** at the selected diameter. Alternatively, the user can selectively pivot the lever **116** against the bias imparted by the tab spring **129** to the buckle-disengaging position to disengage the tooth-engaging tab **127** from the belt teeth **135** and the belt groove **134** and facilitate free movement of the adjustable end **132***b* of the belt **132** through the belt slot **123** until the belt **132** is tightened or loosened according to the preferences of the user. The lever **116** can subsequently again be released such that the tab spring **129** returns the tooth-engaging tab **127** to the tooth-engaging position in the belt groove **134** and the lever **116** to the buckle-engaging position to secure the belt **132** at the selected size or diameter.

Referring next to FIGS. **15-19** of the drawings, sequential fabrication of a belt **132** according to an illustrative embodiment of a belt fabrication method is illustrated. In FIG. **15**, a belt blank **150** having a selected length is provided. The belt blank **150** may be a webbing strap material of polyester, nylon or other suitable material. The belt blank **150** has an inside belt surface **133**.

In FIG. **16**, a belt coating layer **151** is provided on the inside belt surface **133** of the belt blank **150**. The belt coating layer **151** may be rubber, plastic or other moldable or deformable material. The belt coating layer **151** may be applied to the inside belt surface **133** by immersion or other coating or deposition processes known by those skilled in the art.

In FIG. **17**, a belt die **154** is applied to the belt coating layer **151** to form the belt groove **134** and the belt teeth **135**. The belt die **154** has multiple die teeth **155** which are complementary mirror-images of the belt teeth **135** which are formed in the belt coating layer **151**. An inside surface view of an exemplary belt die **154** which is suitable for the purpose of forming the belt groove **134** and the belt teeth **135** in the belt **132** is illustrated in FIG. **18**. An inside surface view of an exemplary belt die **55** which is suitable for the purpose of forming the belt groove **34** and the belt teeth **35** in the belt **32** which was heretofore described with respect to FIGS. **1-11** is illustrated in FIG. **18**. Post-processing steps may include curing of the belt coating layer **151** according to the knowledge of those skilled in the art.

In some embodiments of the method, the structural webbing and the plastic belt coating layer **151** and the imprinting of the belt groove **134** and the belt teeth **135** in the belt coating layer **151** may be formed in a continuous process. Therefore, lengths of the belt **132** of greater than 100 feet and up to 1000 feet may be fabricated in a continuous operation. Thereafter, the individual belts **132** may be cut to the exact length, as needed, and shorter-length belts may be cut from a continuous roll of integrated belt material. The fabrication process may be significantly more economical than conventional processes used to fabricate slotted and ratchet-operable or slide belts. The method may eliminate the need to sew a separate plastic slotted strip into the inside belt surface **133** of the belt **132**.

Referring next to FIG. **20** of the drawings, a flow diagram **200** of an illustrative embodiment of a belt fabrication method is illustrated. In block **202**, a belt blank having an inside belt surface is provided. In some embodiments, the belt blank may be a webbing strap material of polyester, nylon or other suitable material. In block **204**, a belt coating layer is provided on the inside belt surface of the belt blank. The belt coating layer may be rubber, plastic or other moldable or deformable material. In block **206**, a belt die having die teeth is pressed into the belt coating layer to form the belt groove and the belt teeth in the belt coating layer. In some embodiments, the belt groove and the belt teeth may be formed in the belt coating layer in a continuous process.

With reference to FIGS. **21-29**B, another embodiment of a belt adjustment system **301** is illustrated. The belt adjustment system **301** may be coupled with a belt **132**, as described above in FIGS. **12**, **13**, and **14**. The belt **132** may have an inside belt surface **133** which faces the waist of the user and an elongated belt groove **134** extends along at least a portion of the inside belt surface **133**. Multiple, spaced-apart belt teeth **135**, which may be plastic or other material, are provided in the belt groove **134**. The belt adjustment system **301** engages the belt teeth **135** in the belt groove **134** to secure the belt **132** at a selected diameter around the waist of the user. Other belts, such as the belt **32** illustrated in FIGS. **8** and **11**, can be used with the belt adjustment system **301**.

As illustrated in FIGS. **21-29**B, the belt adjustment system **301** includes a body **301***a* that includes a belt clamp portion **302** and a buckle portion. In some embodiments, the body **301***a* can manufactured as a single unit. In some embodiments, the belt adjustment system **301** can be manufactured from a polymer mixture, such as glass filled nylon. In some embodiments, the belt adjustment system can be manufactured from a metal, such as stainless steel, aluminum, or other materials. In some embodiments, the body **301***a* can be assembled from multiple sections coupled together by fasteners, such as the embodiment of the belt adjustment system **1** illustrated in FIG. **1**.

In some embodiments, the belt clamp portion **302** may have a belt clamp interior **302***a* (FIG. **27**). A tab opening **305** (FIG. **21**) in the belt clamp **2** may communicate with the clamp interior **302***a*. A belt tooth tab **303** may be pivotally attached to the belt clamp portion **302** adjacent to the tab opening **305**. Multiple belt teeth **304** may extend from the belt tooth tab **303**. The belt tooth tab **303** may be positional between an open, belt-releasing configuration, similar to the position of the belt tooth tab **3** illustrated in FIG. **2**, in which the belt tooth tab **303** is unseated from the tab opening **305** and the belt teeth **304** are disposed outside the belt clamp interior **302***a*, and a closed, belt-engaging configuration (FIG. **27**) in which the belt tooth tab **303** is seated in the tab opening **305** and the belt teeth **304** extend into the belt clamp interior **302***a*. The belt teeth **304** are adapted to engage and secure an attachment end **132***a* of the belt **132** which is inserted in the belt clamp interior **302***a* of the belt clamp portion **302** to attach the belt adjustment system **301** to the belt **132**. In other embodiments, the belt clamp portion **302** of the belt adjustment system may include any design which facilitates attachment of the belt adjustment system **301** to the attachment end **132***a* of the belt **132** according to the knowledge of those skilled in the art.

A belt stay **306** may be positioned on a top side of body **301***a*. The belt stay **306** can form an opening that accommodates the free adjustable end **132***b* of the belt **132**. The belt stay **306** can function as a bottle opener. For example, a bottle cap can be positioned between the top side of the body **301***a* and the belt stay **306**. The edge of the bottle cap would rest on the edge of the belt stay **306** to pry the bottle cap off.

The belt adjustment system **301** includes a buckle portion **307**. In some embodiments, the buckle portion **307** can be a separate piece, and can connected to the belt clamp portion **302**, such as in the embodiment illustrated in FIGS. **1-5**. The buckle portion **307** includes a buckle frame portion **308** and a tool housing portion **340**.

The buckle frame portion **308** may include a buckle plate **322**, side buckle members **309**, rear buckle connecting members **310**, and front buckle connecting members **313**. The elongated, spaced-apart side buckle members **309** extend from the buckle plate **322**. In some embodiments, the buckle plate **322** may be offset from an outer edge of the side buckle members **309** (as illustrated in FIG. **28**). Rear buckle connecting members **310** may extend between the side buckle members **309** and the tool housing portion **340**. The rear buckle connecting members **310** can be in a generally spaced-apart relationship to each other, in some embodiments the rear buckle connecting members **310** may be substantially parallel. Front buckle connecting members **313** may extend between the side buckle members **309** and the tool housing portion **340**. The front buckle connecting members **313** can be in a generally spaced-apart relationship to each other, in some embodiments the front buckle connecting members **313** may be substantially parallel. The side buckle members **309**, the front buckle connecting members **313**, the rear buckle connecting members **313**, and the inner wall **342** together form a belt space **312** which accommodates the adjustment end **132***b* of the belt **132**.

A tool housing portion **340** is positioned under the buckle frame portion **308**. The belt space **312** is between the buckle frame portion **308** and the tool housing portion **340**. When in use by the user the tool housing portion **340** is positioned between wearer and the belt space. The tool housing portion **340** includes an inner wall **342** that extends at least a portion of the width of the buckle portion **308**. In some embodiments, the inner wall **342** may be contoured and have portions of the wall removed, such as cut out **344**. The cutout may be sized and shaped to accommodate components of the tool housing. The tool housing portion **340** can include an outer wall **346**. In some embodiments, the outer wall **346** can be generally parallel to the inner wall **342**. The outer wall **346** can extend at least a portion of the width of the buckle portion **307**. The inner wall **342** and the outer wall **346** cooperate to form a tool slot **348**. In some embodiments, the inner wall **342** and outer wall **346** are formed as a single component as illustrated in FIG. **21**. In some embodiments, the inner wall **342** and outer wall **346** are separate components that are coupled together. For example, the inner wall **342** may be formed as part of the buckle portion **308** during manufacturing and the outer wall **346** may be coupled to the body **301***a* during assembly of the belt adjustment system **301**. In such embodiments, the outer wall **346** may be coupled to the body **301***a* with fasteners, welding, or other attachment mechanism known to those skilled in the art. One or both of walls **342** and **346** can be integrally formed as a single component with the body **301***a* and/or the buckle frame portion **308**.

The tool slot **348** formed by the inner wall **342** and outer wall **344** is configured to accommodate a tool **350** coupled to the body **301***a*. In some embodiments, the tool **350** can be pivotally coupled with a pivoting fastener **356**. In some embodiments, the tool **350** may be linearly coupled to the body **301***a*. A spacer **352** can be positioned between the inner wall **342** and outer wall **346**. The spacer **352** can be coupled between the outer wall **346** and inner wall **342** by one or more fasteners **354**. In some embodiments, the spacer **352** can be integrally formed with one or both walls **342** and **346**. The spacer **352** can be positioned between the inner wall **342** and the outer wall **346** to increase the structural integrity of the body **301***a*. For example, the spacer **352** can help prevent deflection of the outer wall **346** during use of the tool **350**. The spacer **352** can be positioned and configured to function as a positioning mechanism for limiting movement of the tool **350** between the closed and/or open positions. For example, the spacer **352** can operate as a rotational stop for positioning the tool **350** in an open position. The outer wall **346** and inner wall **346** can have contoured top edges that are configured to allow for a user to rotate and manipulate the tool **350** within the slot **348**. A sharp end and/or edge of the tool **350** (such as blade edge **358**) can be positioned within slot **348** such that the sharp edge of the tool is not exposed and does not extend out of the slot **348** when the tool **350** is in the closed position. In some embodiments, the tool housing portion **340** may include a bottle opener, such as the belt stay **306**, or the bottle opener **13***a* illustrated in FIG. **2**. In some embodiments, a bottle opener may extend from the outer wall **346** into the cavity **344** or out from a distal end of the outer wall.

The tool **350** can be sized and configured to be positioned within the slot **348** and coupled (e.g., pivotally) to the tool housing portion **340** between the inner wall **342** and the outer wall **346**. The tool **350** can be manipulated by a user between a closed position (FIG. **21**) and an open position (FIGS. **29**A and **29**B). The tool **350** can be configured to be secured in the open position by a locking mechanism **364**, such a biased plate (illustrated) or a spring, that functions to lock the tool in the open position. The biasing mechanism **364**, also referred to as a locking mechanism, can help to prevent the tool **350** from moving to the closed position unintentionally when in use by the user. The plate biases to the locking position so that it moves behind the tool in the open position, thereby preventing the tool from closing. The biasing mechanism **364** and/or the tool **350** can be manipulated by the user in order to move the tool **350** from the open position to the closed position, such as by pressing the locking mechanism against the inner wall **342**. The illustrated tool **350** includes a number of features, such as a blade edge **358**, a serrated portion **360**, notches **362**, and a hole **363**. The hole **363** may be provided to facilitate grasping and manipulating the tool **350** by the user. In some embodiments, the hole **363** may be replaced with an indent or other feature to provide similar functionality. The tool **350** is shown for illustrative purposes and the belt adjustment system **301** is not limited to the illustrated tool. Rather the tool **350** can be any type of tool that can be configured to be coupled to the belt adjustment system **301**. In some embodiments, the tool **350** can incorporate functional elements, such as a knife blade, a bottle opener a nail pry, a scraper, a saw blade, a screwdriver (phillips, flat head, socket), can opener, and the like. The tool **350** can incorporate a single functional element, or incorporate any number of functional elements. In some embodiments, the tool **350** is coupled to the tool portion and cannot be easily removed without additional tools. In some embodiments, the tool **350** may be decoupled from the tool portion without the use of tools. In such embodiments, the tool **350** may be usable without being coupled to the belt adjustment system **301**. In some embodiments, the tool **350** is swappable and can be decoupled and replaced with a variety of tools **350**. In some embodiments, more than one tool **350** may be positioned within the slot **348**. For example, a plurality of tools **350** may be positioned within the slot **348**, and each tool can be individually manipulated and moved between open and closed positions.

The tool housing portion **340** can also include a tool cavity portion **366**. The tool cavity portion can be positioned below the outer wall **346**. The tool cavity portion **366** can be configured to house a cavity tool **370** within a cavity **369** (e.g., formed within the body **301***a*). In some embodiments, the tool cavity is positioned between the inner wall **342** and the outer wall **346**. The tool cavity portion **366** comprises an inner cavity wall **368** and an outer cavity wall **367**. The inner cavity wall **368** forms a cavity **369**. The inner cavity wall **368** can be sized and configured to engage a cavity tool **370**. In this embodiment, the tool cavity portion **366** includes a cylindrical, or substantially cylindrical, cavity **369**. In some embodiments, the cavity **369** can be a different shape and size. For example, the outer cavity **367** wall may be flush with the outer wall **346**, or the outer cavity wall **367** may be the same as the outer wall **346**. The cavity **369** extends a defined length within the body **301***a*. The inner cavity wall **368** can be rectangular, oval, or another shape in order to accommodate the cavity tool **370**. The cavity tool **370** can include a handle portion **372** and a body portion **374**. The handle portion **372** is sized and configured to be positioned exterior to the cavity **369**. The body portion **374** is sized and configured to be positioned within the cavity **366**. The cavity tool **370** can include a seal **376** to help secure the cavity tool **370** within the cavity **366**. The seal **376** can help provide an environment that is air and/or water tight. For example, the seal **376** may be an o-ring that is deformed on insertion to seal against the inner wall **368** and prevent water from entering the cavity. In an alternative embodiment, the cavity **369** can include a threaded engagement portion, such as on the outer cavity wall **367** or on the inner cavity wall **368**. The threaded engagement can be used to securely mount the cavity tool **370** within the cavity **369**.

In one embodiment, the cavity tool **370** can be a firestarter rod, such as a cerium mischmetal rod or a ferrocerium rod, for use in generating sparks to start a fire. In such an embodiment, a portion of the body **301***a* can be used as a striker for the firestarter rod to generate sparks. In some embodiments, the cavity tool **370** can be another type of tool, such as a flashlight. In some embodiments, the tool may be permanently secured within the body **301***a*. For example, a flashlight may be permanently secured in place of the illustrated cavity tool and a switch or other manipulatable element for controlling operation of the flashlight. The tool cavity portion **366** can house any number of functional tools or elements that are configured to be positioned the cavity **369**. In some embodiments, the cavity **369** may be configured to have a specific mechanical shape and size that corresponds to a matching mechanical configuration on multiple tools, such that a range of tools can be used with the same cavity configuration. In some embodiments, the belt adjustment system **301** may include a plurality of tool cavities **366**. For example, two or more cavities may be positioned with the body **301***a*.

A lever **316** is pivotally attached to the buckle portion **308** of the body **301***a*. The lever **316** may include a lever frame **317** which may be generally elongated and rectangular. The lever frame **317** may have a pair of generally elongated, parallel, spaced-apart side lever frame members **318** which terminate in a pair of lever frame flanges **319**. The lever frame flanges **319** may be pivotally attached to the rear buckle connecting members **310**, respectively, of the buckle **308** via pivot pins **324**. A connecting frame member **320** may extend between the spaced-apart rear ends of the side lever frame members **318**. As illustrated in FIGS. **22** and **25**, a belt engaging member **321** extends between the spaced-apart lever frame flanges **319**. As the lever **316** is pivoted between a belt-securing configuration illustrated, for example, in FIGS. **3**, **9**, and **24**, and a belt-releasing configuration illustrated, for example, in FIGS. **4**, **7**, **10**, **14**B, **14**D, and **28**, the belt engaging member **321** pivots along with the lever **316**, as described herein. A belt slot **312** may be formed by and between the side lever frame members **318**, the belt-engaging member **321**, and the buckle plate **322**. The belt slot **312** can be sized and configured to accommodate the belt **132** in use with the belt adjustment system **301**. In some embodiments, a plurality of serrations may be provided on the belt engaging member **321** in facing relationship to the belt slot **312**, which can help engage the belt groove **134** and the belt teeth **135**.

The belt adjustment system **301** can be configured to have a high tensile strength. In some embodiments, when the belt adjustment system **301** is coupled to a belt strap, such as belt strap **32** or **132**, the tensile strength can be 2,000 pounds or more. In some embodiments, the tensile strength can be between 1,000 pounds and 2,000 pounds, or less than 1,000 pounds. In some embodiments, tensile strength can be about 500 pounds, about 750 pounds, about 1000 pounds, about 1250 pounds, about 1500 pounds, about 1750 pounds, about 2000 pounds, about 2250 pounds, about 2500 pounds, about 2750 pounds, about 3000 pounds, or any values there between, and all ranges bounded by these values.

FIG. **30** illustrates another embodiment of the belt adjustment system **301'** with an integrated location module **390**. The location module **390** can use a Global Positioning System (GPS) component. The location module **390** can include Global Positioning System (GPS) componentry, a power supply, and operational circuitry housed within the body **301***a*. The power supply can be a battery or a plurality of batteries housed within the body **301***a*. In some embodiments, the power supply may be a rechargeable power supply such as a lithium-ion battery. In some embodiments, the power supply may be removable. In some embodiments, the belt adjustment system **301'** may include a port for recharging the power supply. The location module **390** can have user interface components such as button or other indicators for controlling the operation of the location module. For example, the location module **390** may include one or more light-emitting diodes (LED) for displaying a status of the location module. The LEDs may be configured to display different color and or display patterns based on the operational status of the location module **390**. In one embodiment, the location module may include active, sleep, and standby modes of operation. The location module **390** can use satellite-based tracking technology to determine the location of the belt adjustment system **301'** when activated. The location module **390** can be configured to have low power consumption and reliability by providing transmissions at regular intervals during operation. In some embodiments, the location module **390** can be used globally. In some embodiments, the location module **390** can last multiple months without replacing or recharging the power supply. In some embodiments, the location of the device may be accessible on a web-based interface. For example, a user may log into a web-based interface and can track the current location of the location module **390**. In some embodiments, the belt adjustment system **301'** can provide a waterproof housing for the location module **390**. The location module **390** can provide emergency tracking of a user.

FIGS. **31-33** illustrate another embodiment of a belt adjustment system **401**. The belt adjustment system **401** can include substantially the same features as described in relation to the belt adjustment system **301** with reference to FIGS. **21-29**B. The belt adjustment system includes a buckle

frame portion **308** and an a tool housing portion **440**, including additional embodiments of the tool **450**, cavity tool **470**, and tool cavity portion **466** as described below.

A tool housing portion **440** is positioned under the buckle frame portion **308**. The tool housing portion **440** can have an inner wall **442** and an outer wall **446** that can have substantially the same configuration as the inner wall **342** and the outer wall **346** described with reference to the belt adjustment system **301**. The outer wall **446** and/or inner wall **442** extend substantially the width of the body **401***a* of the belt adjustment system **440**. The outer wall **446** and/or inner wall may be contoured and have portions of the wall removed, such as cutout **444**. The cutout **444** may be sized and shaped to accommodate one or more fingers in order to facilitate manipulation of the tool **450** by a person. In some embodiments, the inner wall and outer wall **446** are formed as a single component or as illustrated in FIG. **21**. In some embodiments, the inner wall and outer wall are separate components that are coupled together. In some embodiments, one or more additional plates may be coupled to the outer wall and/or inner wall. The plates may be coupled to the body **401***a* with fasteners, welding, or other attachment mechanism known to those skilled in the art. The plates may be configured to increase the structural integrity of the belt adjustment system.

A tool slot formed by the inner wall **442** and outer wall **446** is configured to accommodate the tool **450** coupled to the body **401***a*. In the illustrated embodiment, the tool **450** is pivotally coupled to the body **401***a*. In some embodiments, the tool **450** may be linearly coupled to the body **401***a*. The tool **450** may be coupled to the body as further described above with reference to belt adjustment system **301**. The outer wall **446** and inner wall can have contoured top edges that are configured to allow for a user to rotate and manipulate the tool **450** within the slot. A sharp end and/or edge of the tool **450** (such as blade edge **458**) can be positioned within slot such that the sharp edge of the tool is not exposed and does not extend out of the slot when the tool **450** is in the closed position.

The tool **450** can be sized and configured to be positioned within the slot and coupled (e.g., pivotally) to the tool housing portion **440** between the inner wall and the outer wall **446**. The tool **450** can be manipulated by a user between a closed position (FIG. **30**) and an open position (FIG. **32**). The tool **450** can be configured to be secured in the open position by a locking mechanism, such a biased plate or a spring, that functions to lock the tool in the open position. The biasing mechanism (such as, biasing mechanism **364** illustrated in FIG. **29**A) can help to prevent the tool **450** from moving to the closed position unintentionally when in use by the user. The plate can biases to the locking position so that it moves behind the tool in the open position, thereby preventing the tool from closing. The biasing mechanism and/or the tool **450** can be manipulated by the user in order to move the tool **450** from the open position to the closed position, such as by pressing the biasing mechanism against the inner wall **342**.

The illustrated tool **450** includes a number of features, such as a blade edge **458**, a notch **462**, and a hole **463**. The hole **463** may be provided to facilitate grasping and manipulating the tool **450** by the user. In some embodiments, the hole **463** may be replaced with an indent or other feature to provide similar functionality. The tool **450** is shown for illustrative purposes and the belt adjustment system is not limited to the illustrated tool. Rather the tool **450** can be any type of tool that can be configured to be coupled to the belt adjustment system. In some embodiments, the tool **450** can incorporate additional functional elements, such as a knife blade, a bottle opener a nail pry, a scraper, a saw blade, a screwdriver (phillips, flat head, socket), can opener, and the like. The tool **450** can incorporate a single functional element, or incorporate any number of functional elements. In some embodiments, the tool **450** is securely coupled to the tool portion and cannot be easily removed without additional tools. In some embodiments, the tool **450** may be decoupled from the tool portion without the use of tools. For example, the tool **450** may include a quick release mechanism, such as a detent, that allows the tool to be held in place until it is decoupled from the belt adjustment system by the user. In such embodiments, the tool **450** may be usable without being coupled to the belt adjustment system **301**. In some embodiments, the tool **450** is swappable and can be decoupled and replaced with a variety of tools. In some embodiments, more than one tool may be positioned within the slot **348**. For example, a plurality of tools may be positioned within the slot **348**, and each tool can be individually manipulated and moved between open and closed positions.

The tool housing portion **440** can also include a tool cavity portion **466**. The tool cavity portion **466** can be positioned below the outer wall **446**. The tool cavity portion **466** can be configured to house a cavity tool **470** within a cavity **469** (e.g., formed within the body **401***a*). FIG. **33** illustrates a cutout view of the interior of the cavity **469**. In some embodiments, the tool cavity **480** is positioned between the inner wall and the outer wall **446**. The inner cavity wall **468** forms the cavity **469**. The inner cavity wall **468** can be sized and configured to engage a cavity tool **470**. For example, in the illustrated embodiment, the inner cavity wall **468** includes two cylindrical, or substantially cylindrical, portions that match the shape of the cavity tool **470**. The first portion has a larger diameter than the second portion. In some embodiments, the cavity **369** can be a different shape and size. The cavity **469** may be sized and shaped to match a different size or shaped tool. For example, the inner cavity wall **468** may be rectangular, oval, or another shape in order to accommodate the cavity tool. The cavity portion **466** can include slots or grooves **480** that extend at least a portion of the length of the cavity portion **466**. The slots **480** extend though the outer cavity wall **467** to the interior cavity **469**. The slots **480** form a tab **482** that can be configured to help secure the cavity tool within the cavity **469**. The tab **482** can be function as a compliant mechanism to apply a securing force to the cavity tool **470** so that it remains in place. For example, the tab **482** can be biased inward toward the interior cavity **469**. The tab **482** can elastically deform when the cavity tool **470** is inserted or removed from the cavity **469**. The size and shape of the slots **480** and tab **482** can be configured to determine the amount of retention force applied to the cavity tool **470**, and the amount of force required to remove the cavity tool **470** from the cavity **469**. In some embodiments, the outer edge of the cavity **469** may include a lip or other protrusion to help secure the cavity tool **470** within the cavity.

The cavity tool **470** can be include a handle portion **472** and an upper body portion **474** and a lower body portion **476**. The handle portion **472** is sized and configured to be positioned exterior to the cavity **469**. The upper body portion **474** and the lower body portion **476** are sized and configured to be positioned within the cavity **469**. In some embodiments, the cavity tool **470** can include a lip, protrusion, or seal to help secure the cavity tool **470** within the cavity **469**. In an alternative embodiment, the cavity **369** can include a threaded engagement portion, such as on the outer cavity

wall **467** or on the inner cavity wall **468**. The threaded engagement can be used to securely mount the cavity tool **470** within the cavity **469**.

In some embodiments, the lower body portion **476** can be a firestarter rod, such as a cerium mischmetal rod or a ferrocerium rod, for use in generating sparks to start a fire. In such an embodiment, a portion of the body **401***a* may be used as a striker for the firestarter rod to generate sparks. In some embodiments, the handle portion **472** and the upper body portion **474** may be a flashlight. The power supply for the flashlight can be positioned within the upper body portion **474**, The power supply can be a battery or a plurality of batteries housed within the upper body portion **474**. In some embodiments, the power supply may be a rechargeable power supply such as a lithium-ion battery. In some embodiments, the power supply may be accessibly by removing the handle portion **472** from the upper body portion **474**. For example, the upper body portion may have a threaded engagement portion for coupling the handle portion **472** to the upper body portion **474**.

While the embodiments of the disclosure have been described above, it will be recognized and understood that various modifications can be made to cover modifications which may fall within the spirit and scope of the disclosure. For example the tools **350** or **450**, the cavity tools **370** or **470**, and/or the location module **390** can be used with any of the other features disclosed herein.

What is claimed is:

1. A belt adjustment system, comprising:
a belt comprising a plurality of belt teeth;
a buckle comprising:
a belt clamp configured to couple the belt to the buckle;
a lever movable between a first position and a second position;
a tooth-engaging tab, the tooth-engaging tab positionable between a tooth-engaging position when the lever is in the first position, and a tooth-disengaging position when the lever is in the second position;
a tool housing comprising a first wall and a second wall, a slot formed between the first wall and the second wall;
a tool comprising a distal end and a proximal end, wherein the proximal end is coupled to the tool housing, the tool positionable between a closed position and an open position;
a second tool housing comprising an outer wall and an inner wall forming a cavity; and
a second tool comprising a tool handle at a proximal end, and a tool body extending out distally, wherein the tool body is configured to be positioned within the cavity.

2. The belt adjustment system of claim **1**, wherein the second tool includes a firestarter rod.

3. The belt adjustment system of claim **2**, wherein the second tool includes a flashlight positioned in the tool handle portion and the firestarter rod in the tool body.

4. The belt adjustment system of claim **1**, wherein tool body is sized and shaped to match the shape of the inner wall.

5. The belt adjustment system of claim **1**, further comprising a locking mechanism configured to lock the tool in the open position, wherein the locking mechanism is manipulatable by a user to move the tool to the closed position.

6. The belt adjustment system of claim **1**, wherein the tool is a multitool comprising multiple functional elements.

7. The belt adjustment system of claim **1**, wherein in the closed position, a distal end of the tool is disposed within the slot, and wherein in the open position the distal end is positioned outside of the slot.

8. A belt adjustment system, comprising:
a buckle comprising:
a belt clamp configured to couple a belt to the belt adjustment system;
a lever movable between a first position and a second position;
a belt-engaging element, the belt-engaging element positionable between a belt-engaging position when the lever is in the first position, and a belt-disengaging position when the lever is in the second position, wherein the belt-engaging member is configured to engage a belt positioned within a belt space of the belt adjustment system;
a tool housing comprising a first wall and a second wall, a slot formed between the first wall and the second wall; and
a tool comprising a distal end and a proximal end, wherein the proximal end is coupled to the tool housing, the tool positionable between a closed position and an open position;
a second tool housing comprising an outer wall and an inner wall forming a cavity; and
a second tool comprising a tool handle at a proximal end, and a tool body extending out distally, wherein the tool body is configured to be positioned within the cavity.

9. The belt adjustment system of claim **8**, further comprising a locking mechanism configured to lock the tool in the open position, wherein the locking mechanism is manipulatable by a user to move the tool to the closed position.

10. The belt adjustment system of claim **8**, wherein in the closed position, a distal end of the tool is disposed within the slot, and wherein in the open position the distal end is positioned outside of the slot.

11. The belt adjustment system of claim **8** wherein the tool handle is positioned exterior to the cavity when the tool body is positioned within the cavity.

12. The belt adjustment system of claim **8**, wherein the tool is pivotally coupled to the tool housing portion.

13. The belt adjustment system of claim **8**, wherein the tool is linearly coupled to the tool housing portion.

14. The belt adjustment system of claim **8**, wherein a tool housing portion is configured to be positioned between the belt and a wearer of the belt.

15. The belt adjustment system of claim **8**, wherein the cavity cylindrical.

16. The belt adjustment system of claim **8**, wherein the second tool further comprises a seal configured to secure the second tool body within the cavity.

17. The belt adjustment system of claim **8**, wherein the second tool housing further comprises a threaded engagement portion configured to secure the second tool within the cavity.

18. The belt adjustment system of claim **8**, wherein the second tool housing comprises grooves that extend at least a portion of the cavity and form tabs that are configured to apply a securing force to secure the second tool within cavity.

19. The belt adjustment system of claim **8**, wherein, when the second tool is removed from the second tool housing, the second tool decoupled and separate from the buckle.

* * * * *