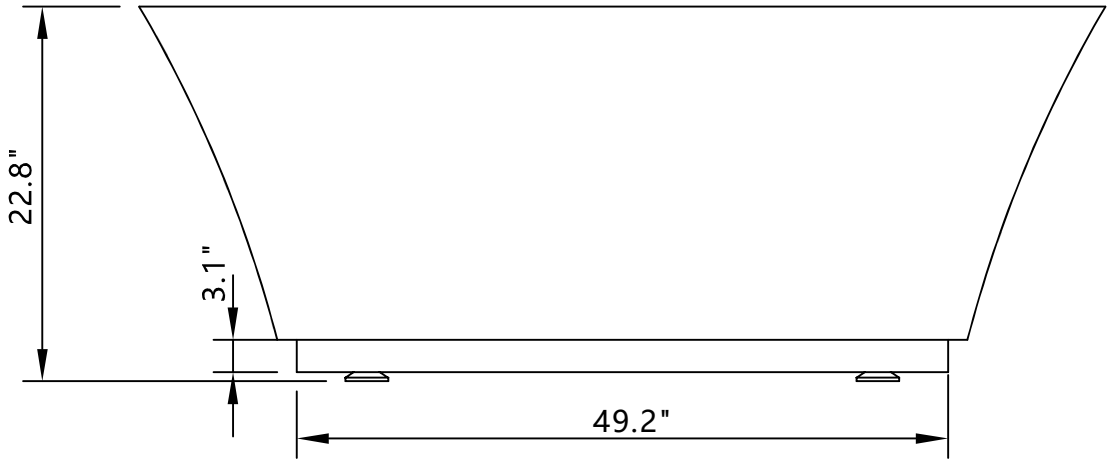
22.8"
3.1"
49.2"

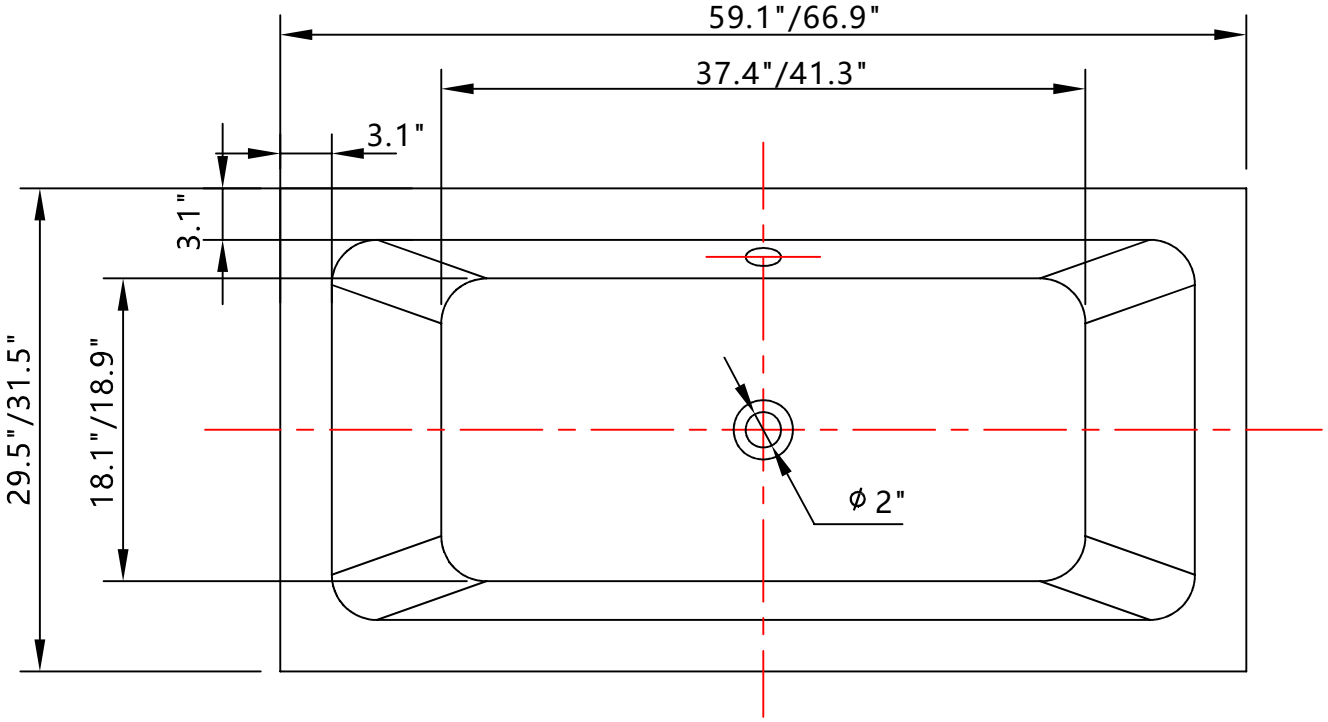
59.1"/66.9"
37.4"/41.3"
3.1"
3.1"
29.5"/31.5"
18.1"/18.9"
ϕ 2"

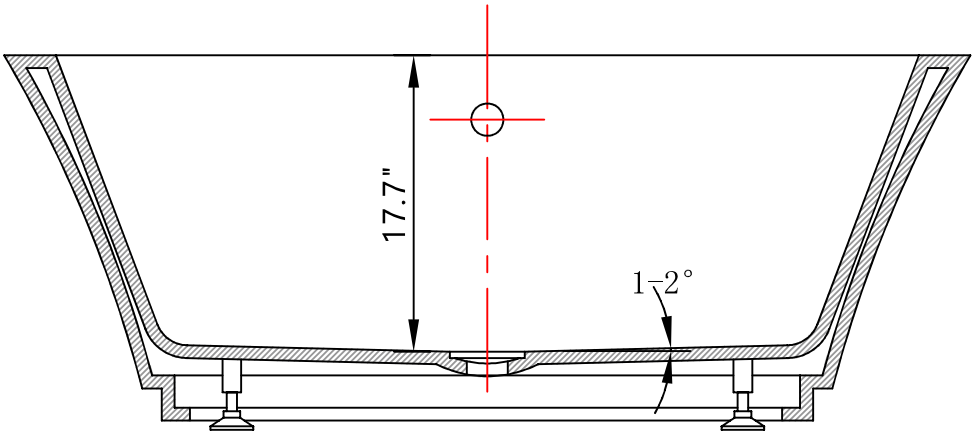
17.7"
1-2°