REVISIONS				
CHANGE CONTROL	REV	DESCRIPTION	ISSUE DATE	APPROVED DATE
N/A	N/A	ENGINEERING USE	N/A	N/A

NOTES:
1. MATERIAL: 25 DURO SILICONE
2. MATERIAL COMPLIANT WITH USP CLASS VI AND REACH EC REGULATION 1907/2006

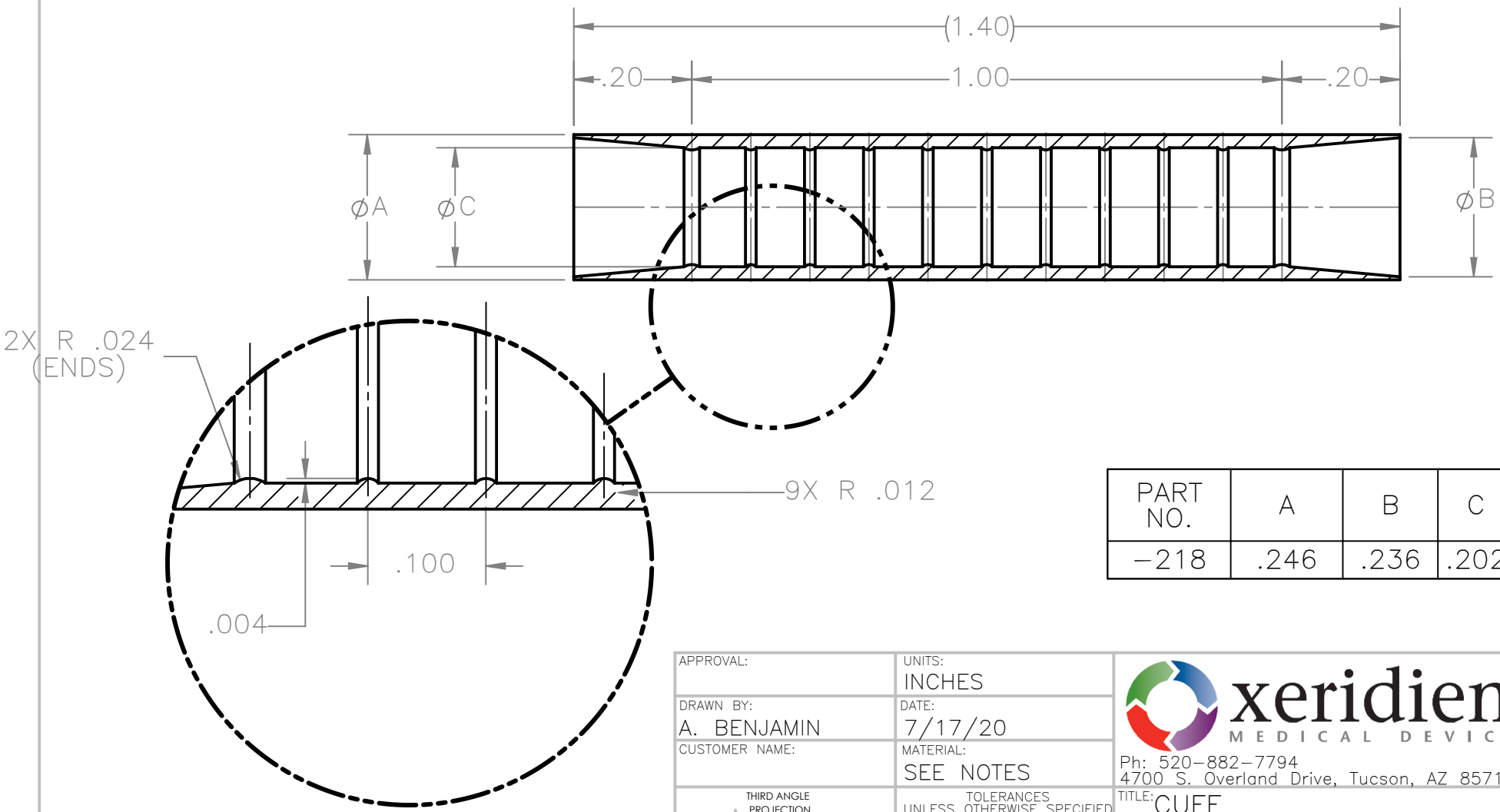

PART NO.	A	B	C
−218	.246	.236	.202

APPROVAL:	UNITS: INCHES	xeridiem MEDICAL DEVICES
DRAWN BY: A. BENJAMIN	DATE: 7/17/20	Ph: 520−882−7794 4700 S. Overland Drive, Tucson, AZ 85714
CUSTOMER NAME:	MATERIAL: SEE NOTES	
THIRD ANGLE PROJECTION	TOLERANCES UNLESS OTHERWISE SPECIFIED INCHES .X ±.03 .XX ±.01 .XXX ±.005 FRACTIONS ±1/32	TITLE: CUFF
ANGLES ±1°		DRAWING NO. 30−0416−XXX REV. N/A
		SCALE: 2:1 SHEET 1 OF 1

5 4 3 2 1