Streamline

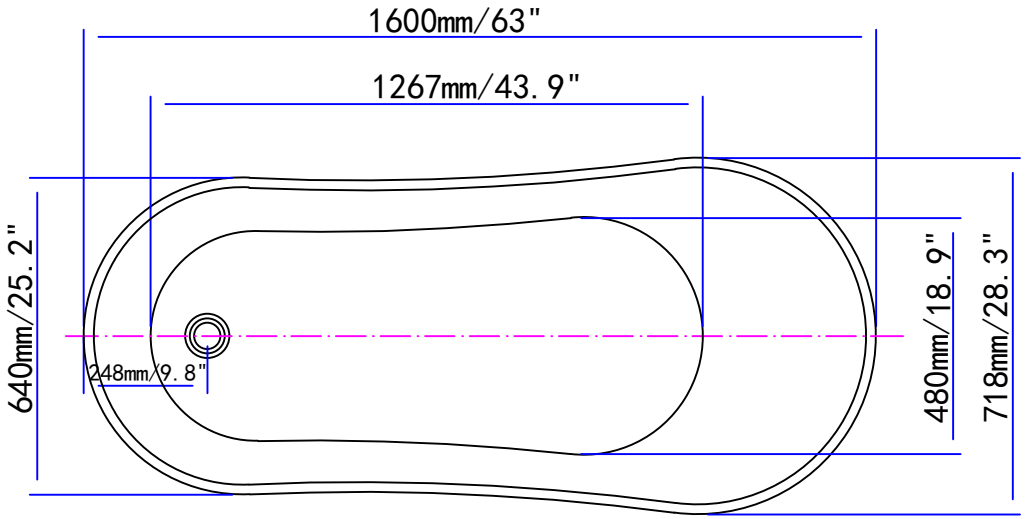
1600mm/63"
1267mm/43.9"
640mm/25.2"
248mm/9.8"
480mm/18.9"
718mm/28.3"

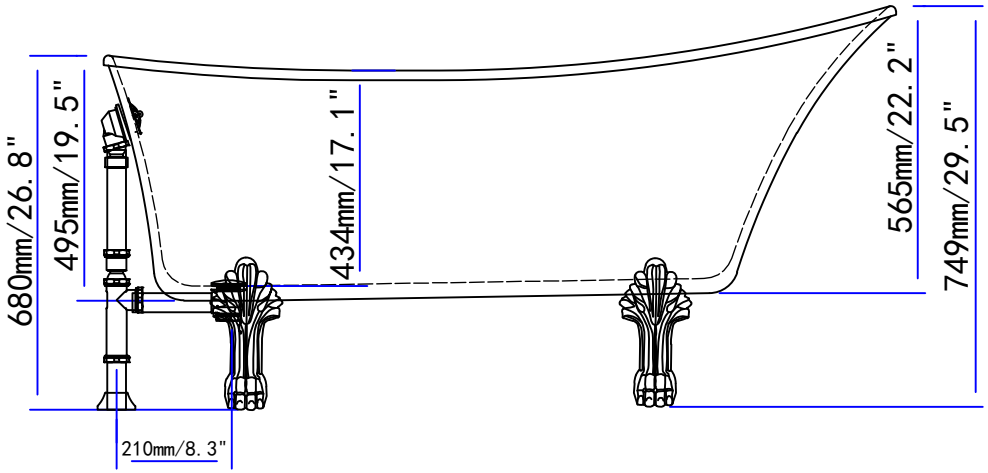
680mm/26.8"
495mm/19.5"
434mm/17.1"
565mm/22.2"
749mm/29.5"
210mm/8.3"