BYS-M007 Cruise
BACK HEIGHT 88cm/34.5 "
Console HEIGHT 81cm/31.75 "

Remark: the dimension will be squeezed to reduce 2cm/seat while combinated into multi-seats

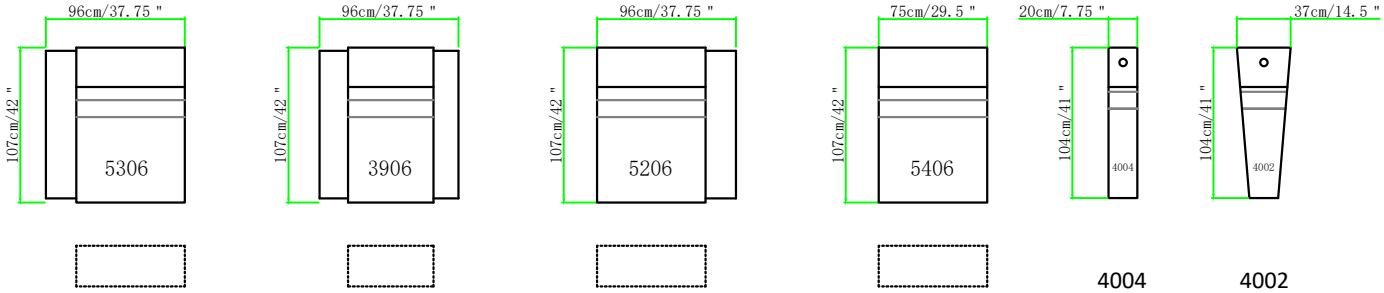

4004 Straight Console

4002 Wedge Console

5306-LAF Chair
Power Recline
Power Headrest

3906-2 Arm Chair
Power Recline
Power Headrest

5206-LAF Chair
Power Recline
Power Headrest
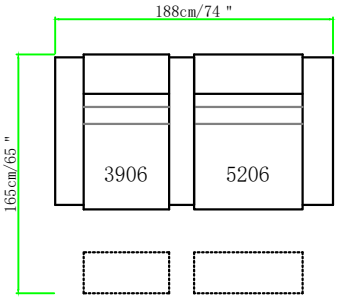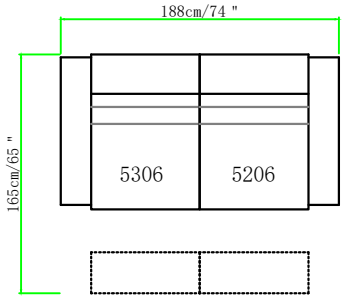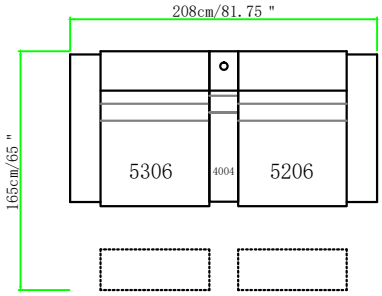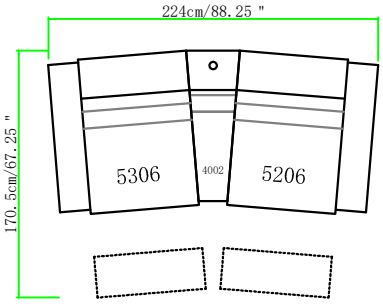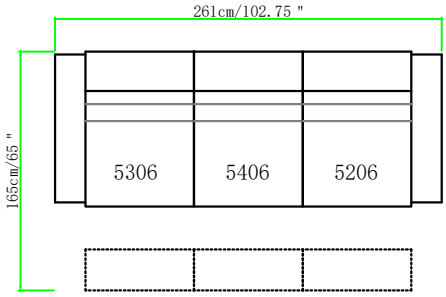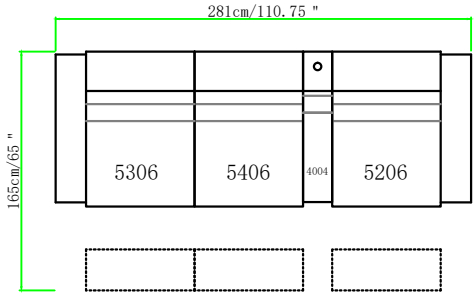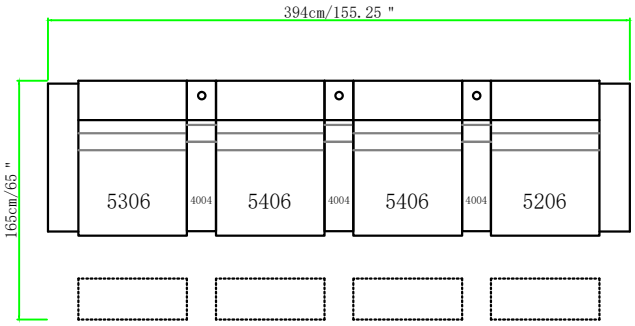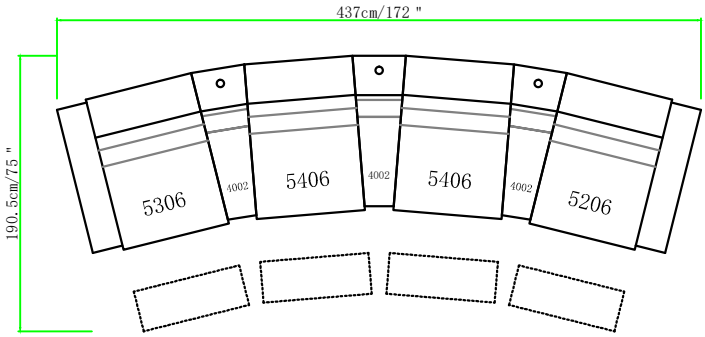
5406-Armless Chair
Power Recline
Power Headrest