WRITE YOUR OWN

CHOOSE YOUR OWN ADVENTURE®

TITLE

WRITTEN BY

ILLUSTRATED BY

CHOOSECO®
WAITSFIELD, VERMONT
WWW.CYOA.COM

CHOOSE YOUR OWN ADVENTURE and the CHOOSE YOUR OWN ADVENTURE IN OVAL are trademarks of Chooseco LLC and are registered in the United States and may be registered in jurisdictions internationally. Chooseco's trademarks, service marks, and trade dress may not be used in connection with any product or service that is not affiliated with Chooseco LLC, or in any manner that is likely to cause confusion among customers, or in any manner that disparages or discredits Chooseco LLC.

No part of this publication may be reproduced, stored in a retrieval system, or transmitted in any form or by any other means, electronic, mechanical, photocopying, recording, or otherwise, without the prior written permission of the publisher and Chooseco LLC.

Write Your Own Choose Your Own Adventure
© 2020, Chooseco LLC, Waitsfield, Vermont. All Rights Reserved.

Additional Content:

Book Title _____

© Year _____

Author _____

Location _____

All Rights Reserved

Artist _____

© Year _____

Location _____

All Rights Reserved

This blank book is intended solely for your own educational and entertainment purposes. Please do not copy or distribute your finished book without the permission of Chooseco LLC.

ISBN: 978-1-937133-85-6

Printed in the United States

13 12 11 10 9 8 7 6 5 4

BEWARE and WARNING!

This book is different from other books.

You and YOU ALONE are in charge of what happens in this story.

There are dangers, choices, adventures, and consequences. YOU must use all of your numerous talents and much of your enormous intelligence. The wrong decision could end in disaster—even death. But don't despair. At any time, YOU can go back and make another choice, alter the path of your story, and change its result.

This book is dedicated to:

_____

Turn to page 2.

Turn to page 4.

Go on to the next page.

Turn to page 7.

6

_____

_____

_____

_____

_____

_____

_____

_____

_____

_____

_____

_____

_____

_____

If you _____

_____

turn to page _____.

If you _____

_____

turn to page _____.

_____

_____

_____

_____

_____

_____

_____

_____

_____

_____

_____

_____

_____

_____

If you _____

_____

turn to page _____.

If you _____

_____

turn to page _____.

turn to page _____.

_____

_____

_____

_____

_____

_____

_____

_____

_____

_____

_____

_____

If you _____

_____

turn to page _____.

If you _____

_____

turn to page _____.

If you _____

_____

turn to page _____.

Go on to the next page.

_____

_____

_____

_____

_____

_____

_____

_____

_____

_____

_____

_____

_____

_____

If you _____

_____

turn to page _____.

If you _____

_____

turn to page _____.

turn to page _____.

turn to page _____.

_____

_____

_____

_____

_____

_____

_____

_____

_____

_____

_____

_____

_____

_____

If you _____

_____

turn to page _____.

If you _____

_____

turn to page _____.

The End

turn to page _____.

_____

_____

_____

_____

_____

_____

_____

_____

_____

_____

_____

_____

_____

_____

If you _____

_____

turn to page _____.

If you _____

_____

turn to page _____.

_____

_____

_____

_____

_____

_____

_____

_____

_____

_____

_____

_____

_____

_____

If you _____

_____

turn to page _____.

If you _____

_____

turn to page _____.

_____

_____

_____

_____

_____

_____

_____

_____

_____

_____

_____

_____

_____

_____

If you _____

_____

turn to page _____.

If you _____

_____

turn to page _____.

The End

The End

turn to page _____.

turn to page _____.

The End

turn to page _____.

turn to page _____.

The End

turn to page _____.

_____

_____

_____

_____

_____

_____

_____

_____

_____

_____

_____

_____

_____

_____

If you _____

_____

turn to page _____.

If you _____

_____

turn to page _____.

The End

The End

_____

_____

_____

_____

_____

_____

_____

_____

_____

_____

_____

_____

_____

_____

If you _____

_____

turn to page _____.

If you _____

_____

turn to page _____.

_____

_____

_____

_____

_____

_____

_____

_____

_____

_____

_____

_____

_____

_____

If you _____

_____

turn to page _____.

If you _____

_____

turn to page _____.

_____

_____

_____

_____

_____

_____

_____

_____

_____

_____

_____

_____

_____

_____

If you _____

_____

turn to page _____.

If you _____

_____

turn to page _____.

turn to page _____.

_____

_____

_____

_____

_____

_____

_____

_____

_____

_____

_____

_____

_____

_____

If you _____

_____

turn to page _____.

If you _____

_____

turn to page _____.

turn to page _____.

turn to page _____.

The End

turn to page _____.

turn to page _____.

The End

The End

turn to page _____.

The End

turn to page _____.

turn to page _____.

The End

The End

turn to page _____.

The End

The End

The End

The End

The End

The End

The End

The End

turn to page _____.

The End

The End

turn to page _____.

_____

_____

_____

_____

_____

_____

_____

_____

_____

_____

_____

_____

_____

_____

If you _____

_____

turn to page _____.

If you _____

_____

turn to page _____.

turn to page _____.

_____

_____

_____

_____

_____

_____

_____

_____

_____

_____

_____

_____

_____

_____

If you _____

_____

turn to page _____.

If you _____

_____

turn to page _____.

The End

turn to page _____.

_____

_____

_____

_____

_____

_____

_____

_____

_____

_____

_____

_____

_____

_____

If you _____

_____

turn to page _____.

If you _____

_____

turn to page _____.

The End

turn to page _____.

_____

_____

_____

_____

_____

_____

_____

_____

_____

_____

_____

_____

_____

_____

If you _____

_____

turn to page _____.

If you _____

_____

turn to page _____.

turn to page _____.

_____

_____

_____

_____

_____

_____

_____

_____

_____

_____

_____

_____

_____

_____

If you _____

_____

turn to page _____.

If you _____

_____

turn to page _____.

turn to page _____.

_____

_____

_____

_____

_____

_____

_____

_____

_____

_____

_____

_____

_____

_____

If you _____

_____

turn to page _____.

If you _____

_____

turn to page _____.

turn to page _____.

_____

_____

_____

_____

_____

_____

_____

_____

_____

_____

_____

_____

_____

_____

If you _____

_____

turn to page _____.

If you _____

_____

turn to page _____.

The End

The End

turn to page _____.

_____

_____

_____

_____

_____

_____

_____

_____

_____

_____

_____

_____

_____

_____

If you _____

_____

turn to page _____.

If you _____

_____

turn to page _____.

turn to page _____.

_____

_____

_____

_____

_____

_____

_____

_____

_____

_____

_____

_____

_____

_____

If you _____

_____

turn to page _____.

If you _____

_____

turn to page _____.

The End

turn to page _____.

_____

_____

_____

_____

_____

_____

_____

_____

_____

_____

_____

_____

_____

_____

If you _____

_____

turn to page _____.

If you _____

_____

turn to page _____.

turn to page _____.

_____

_____

_____

_____

_____

_____

_____

_____

_____

_____

_____

_____

_____

_____

If you _____

_____

turn to page _____.

If you _____

_____

turn to page _____.

turn to page _____.

_____

_____

_____

_____

_____

_____

_____

_____

_____

_____

_____

_____

_____

_____

If you _____

_____

turn to page _____.

If you _____

_____

turn to page _____.

turn to page _____.

_____

_____

_____

_____

_____

_____

_____

_____

_____

_____

_____

_____

_____

_____

If you _____

_____

turn to page _____.

If you _____

_____

turn to page _____.

The End

The End

ABOUT THE ARTIST

YOUR PHOTO HERE

The End

ABOUT THE AUTHOR

YOUR PHOTO HERE

The End

SOME STORY OPENINGS

By R. A. Montgomery

1. You are a deep sea explorer aboard a small, one-occupant submarine in search of the legendary lost city of Atlantis. You can travel safely into the most dangerous and unknown places in the deep sea. Places where no one has been before! As you venture deeper, a strange feeling overcomes you, part warning, part terror. Is there a giant squid up ahead? Are there poisonous bubbles inside your ship? Should you dive deeper and explore the grotto, taking the risk that you'll be sucked down into the deep sea…forever?

2. You are a serf in ancient Egypt working on the pyramids. Your colony is divided into several feuding camps. You and your cousin Emet, who is also a serf, are working to unite the camps to stage a revolt against the cruel overseers. There is a secret meeting for tonight. You are preparing to leave for the meeting when another serf rushes in to tell you that Emet is missing and may have been taken into custody by the Pharoah's people.

3. You are an explorer in Africa. The year is 1844. You are searching for the headwaters of the Nile in the area near Lake Victoria. But you keep hearing about a region nearby where the tribal chieftain has concocted a potion for everlasting life. What's so interesting, is that some old papyrus records recently discovered in some buried urns near Cairo refer to a region right near you, where inhabitants seemed to live forever, at least six or seven hundred years. Could the rumors be true? Should you change your search and head to find this chieftain?

4. You are a detective with Interpol, assigned to a case involving computer hackers who have developed a technique for stealing a few pennies from bank accounts all over the world. While a few pennies may not seem like much, their total haul is estimated to be $2 BILLION DOLLARS. You are hot on the trail of the ringleader, who moves around the Belgian countryside using anonymous internet cafés and multiple email addresses. But suddenly you come across a clue that indicates there may be a higher-up involved, who runs the hackers. And the higher-up leads straight to highest offices of your own government.

5. You are a member of the Hopi tribe living in the Taos, New Mexico pueblo at the turn of the last century, in early 1902. Your sister and younger brother were last seen headed up the ancient rail to visit the Kachinas (mysterious figure in Hopi mythology) in their mountain home. That was eleven days ago. You have been told to find them. Where should you start?

GUIDELINES FOR WRITING A CHOOSE YOUR OWN ADVENTURE® GAMEBOOK

1. Make sure to use a pencil to write, and keep an eraser handy.

2. Every *Choose Your Own Adventure®* gamebook has a goal or a quest. You will need one too. In *Journey Under the Sea,* you are looking for the lost continent of Atlantis. In *The Abominable Snowman,* you are looking for your friend Carlos, who has gone missing while in search of the mythic *yeti.* Whatever else in the story side-tracks you, and lots can side-track you, you need to tie things back to your primary goal or quest. Before you write a word, you need to define this story purpose. It is like the engine of the story: it keeps you moving forward no matter what else occurs. For some story ideas, go to page 114. Or use your own experiences or interests. If you like fishing, maybe there is a famous "River of No Return" where all fishermen disappear. If you like gymnastics, maybe your could create a mystery at gymnastics camp?

3. Your quest or story purpose has a setting: the physical place and time in which your story occurs. If you choose to go with #2 on the list of openings, your setting is the daily life and experience of serf in ancient Egypt. You will need to research the details of this life: what you as an enslaved worker ate and wore, what type of house you lived in, and who ruled your daily existence. You will need to know the climate near the pyramids, and the seasonal dangers, like the annual flooding of the Nile. This research can give you lots of ideas for different choices and endings. Maybe in one ending, the bad guys are washed away in the flood and you are finally free?

4. Now you are ready to write. Remember to have fun. You are trying to entertain your reader and keep them interested. Try to use dialogue to move your story forward some of the time. Don't worry if you get a new idea that is different from your outline as you write. This is part of the process. Just go back to your outline and make a few adjustments. This is where the eraser comes in!

5. We have left the following pages blank for illustrations: 3, 6, 9, 15, 20, 23, 31, 41, 51, 61, 62, 67, 68, 71, 73, 81, 84, 100. You can draw or color these by hand, or clip images from old magazines. You can even create collages of different elements. Remember that illustrations should show some action, or an important moment in your story.

6. After you are finished writing, put your work away for a few days. DO NOT PEEK. Then re-read your story. Problems or places where you can make your story better will pop out. We promise. This is where the eraser comes in a second time.

7. Congratulations. Once you have edited your manuscript and entered the changes, your book is finished. You've just written a *Choose Your Own Adventure®* gamebook!

   This blank book is intended solely for your own educational and entertainment purposes. Please do not copy or distribute your finished book without the permission of Chooseco LLC.

PLOT YOUR OWN MAP

Every CYOA writer needs a "map" of their book to work with during the writing process. Even if you don't have your story fully plotted, that's okay. You can erase and redraw the map as you go along.

Your map will help you sort your ideas and keep your stories on track. Too many turn-to pages in a row and your story is probably getting boring. Too many choices right in a row and your storyline are probably not developed enough.

SECRET TIP: My maps sometimes even give me ideas. I will refer to my map and see that the page I am on needs a choice. If I wasn't planning to write a choice on that page, I ask myself if maybe I should. Usually, the idea is right behind this thought. Seriously.

WHAT YOU NEED: A couple of sheets of blank white paper (the back side of pages is fine!), a pencil and sharpener, and an eraser. (If you want to work from a larger map and keep notes and ideas on it, you will need tape and a few more blank sheets of paper.)

1. If your book is going to be 25 pages long, write the numbers 1 through 25 at the bottom of the page. Separate them with a comma, or enough space so that each number is distinct.

CHOOSE YOUR OWN ADVENTURE®

MAP

1, 2, 3, 4, 5, 6, 7, 8, 9, 10, 11, 12, 13, 14, 15, 16, 17, 18, 19, 20, 21, 22, 23, 24, 25

2. Make your first three or four pages the opening. Draw a bracket to create the first choice point. Image 2. (Secret Tip: make that first bracket wider because each choice will give forth to around one half of your book, and you will need room for all those brackets!)

CHOOSE YOUR OWN ADVENTURE®

MAP

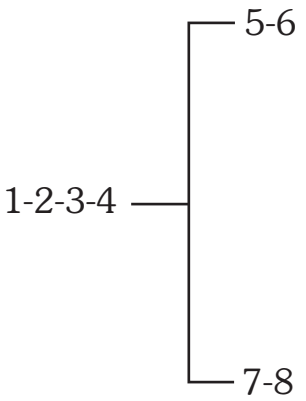

~~1~~, ~~2~~, ~~3~~, ~~4~~, ~~5~~, ~~6~~, ~~7~~, ~~8~~, 9, 10, 11, 12, 13, 14, 15, 16, 17, 18, 19, 20, 21, 22, 23, 24, 25

3. Fill in the rest of the map. Every time you use a number for a page, cross it off at the bottom. I suggest two pages between choices. This leaves room for story and for your illustrations. Sometimes you might use three pages. And sometimes just one.
4. Add more numbers to the bottom of your map if you run out. Just remember to keep crossing them off as you use them.

CHOOSE YOUR OWN ADVENTURE®

MAP

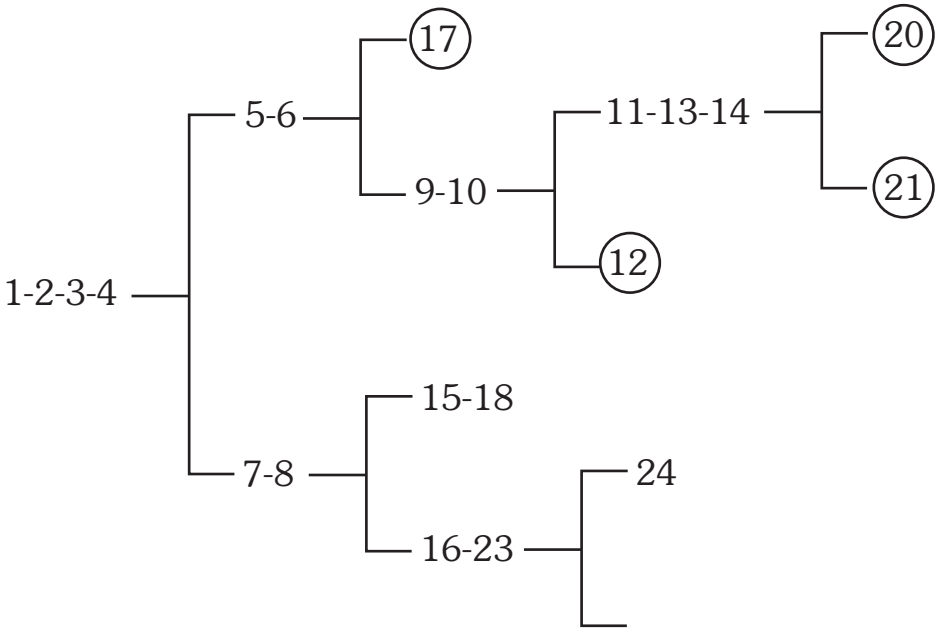

~~1~~, ~~2~~, ~~3~~, ~~4~~, ~~5~~, ~~6~~, ~~7~~, ~~8~~, ~~9~~, ~~10~~, ~~11~~, ~~12~~, ~~13~~, ~~14~~, ~~15~~, ~~16~~, ~~17~~, ~~18~~, 19, ~~20~~, ~~21~~, 22, 23, 24, 25…adding more numbers 26, 27, 28, 29

5. Circle the endings and count them. Endings should be about 15-20% of the pages of your story!
6. The End.

CHOOSE YOUR OWN ADVENTURE®
MAP

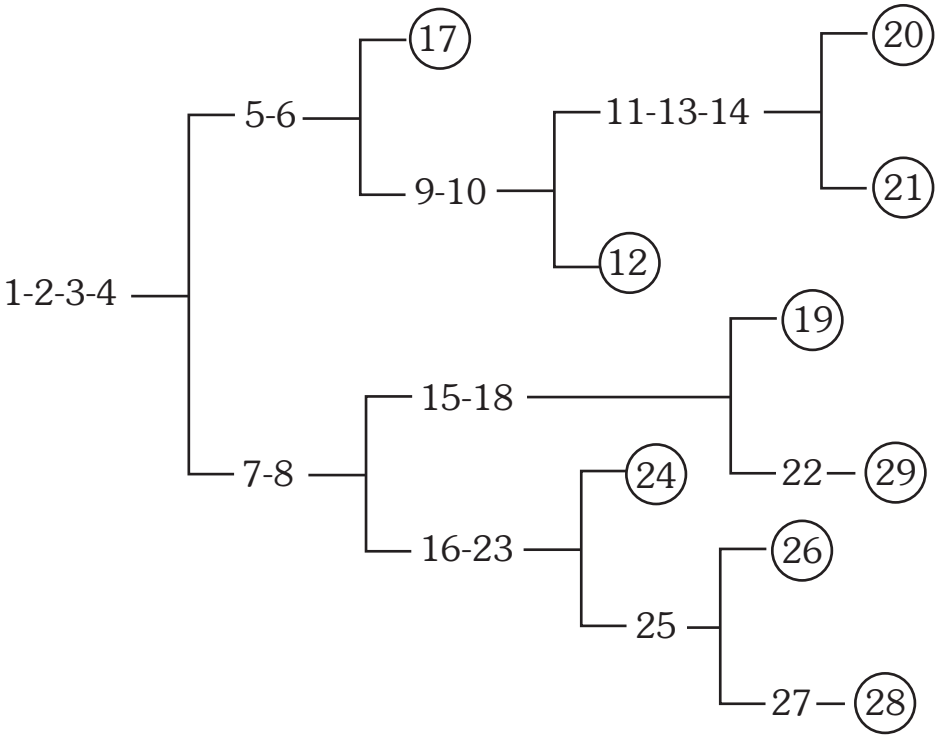

1, 2, 3, 4, 5, 6, 7, 8, 9, 10, 11, 12, 13, 14, 15, 16, 17, 18, 19, 20, 21, 22, 23, 24, 25…adding more numbers 26, 27, 28, 29