APPLICATION:

JOB NAME:

QUANTITY:

ITEM NO.:

PRODUCT NAME:

# CTL VLV SDDLH SVL CK

MODEL:

☐ 13072 CTL VLV SDDLH SVL CK

OPTIONS OR MODIFICATIONS:

☐ OTHER _____

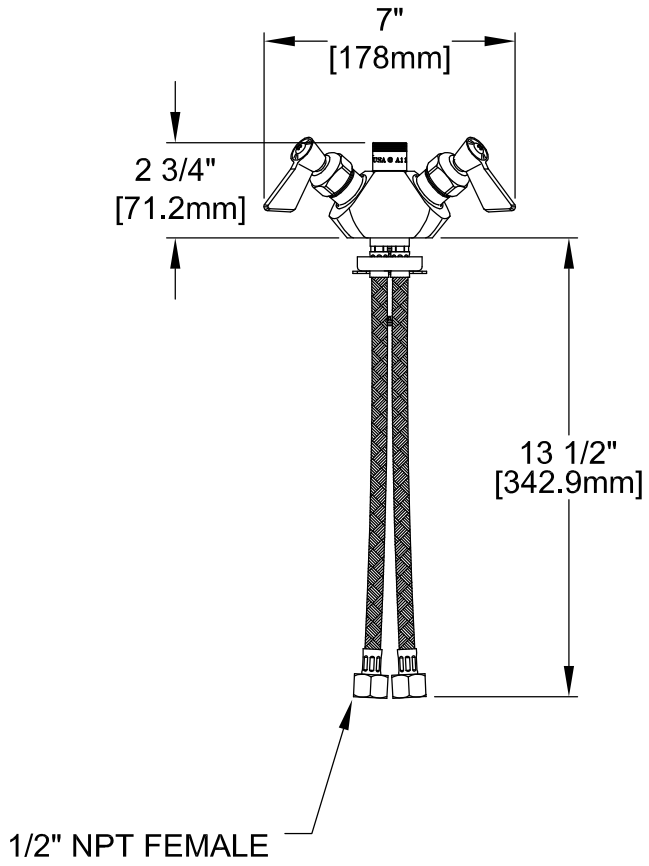


FEATURES

CONTROL VALVE
* SWIVEL OUTLET
* INTERNAL SPRING LOADED CHECK VALVES
* HOT SIDE STEM - RIGHT HAND
* COLD SIDE STEM - LEFT HAND
* SWIVELLING SEAT DISKS
* STAINLESS STEEL SEATS
* STAINLESS STEEL SEAT SCREWS
* STAINLESS STEEL HANDLE SCREWS
* FLEXIBLE INLET HOSES

SYSTEM LIMITS
* TEMP: 40°F MIN. TO 160°F MAX.
* PRESSURE: 200 PSI MAX. STATIC

SHIPPING WEIGHT
* 5.0 LBS

PRODUCT COMPLIANCE:
* ASME A112.18.1 / CSA B125.1
* NSF 61 - Section 9
* NSF 372 (Low Lead Content)

ROUGH-IN:

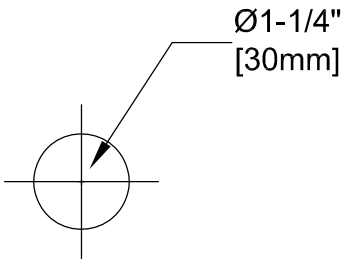


FISHER MANUFACTURING COMPANY
TOLL FREE: 800-421-6162 - FAX: 800-832-8238
information@fisher-mfg.com - www.fisher-mfg.com

SPEC. CVHB-SO-SDDLL