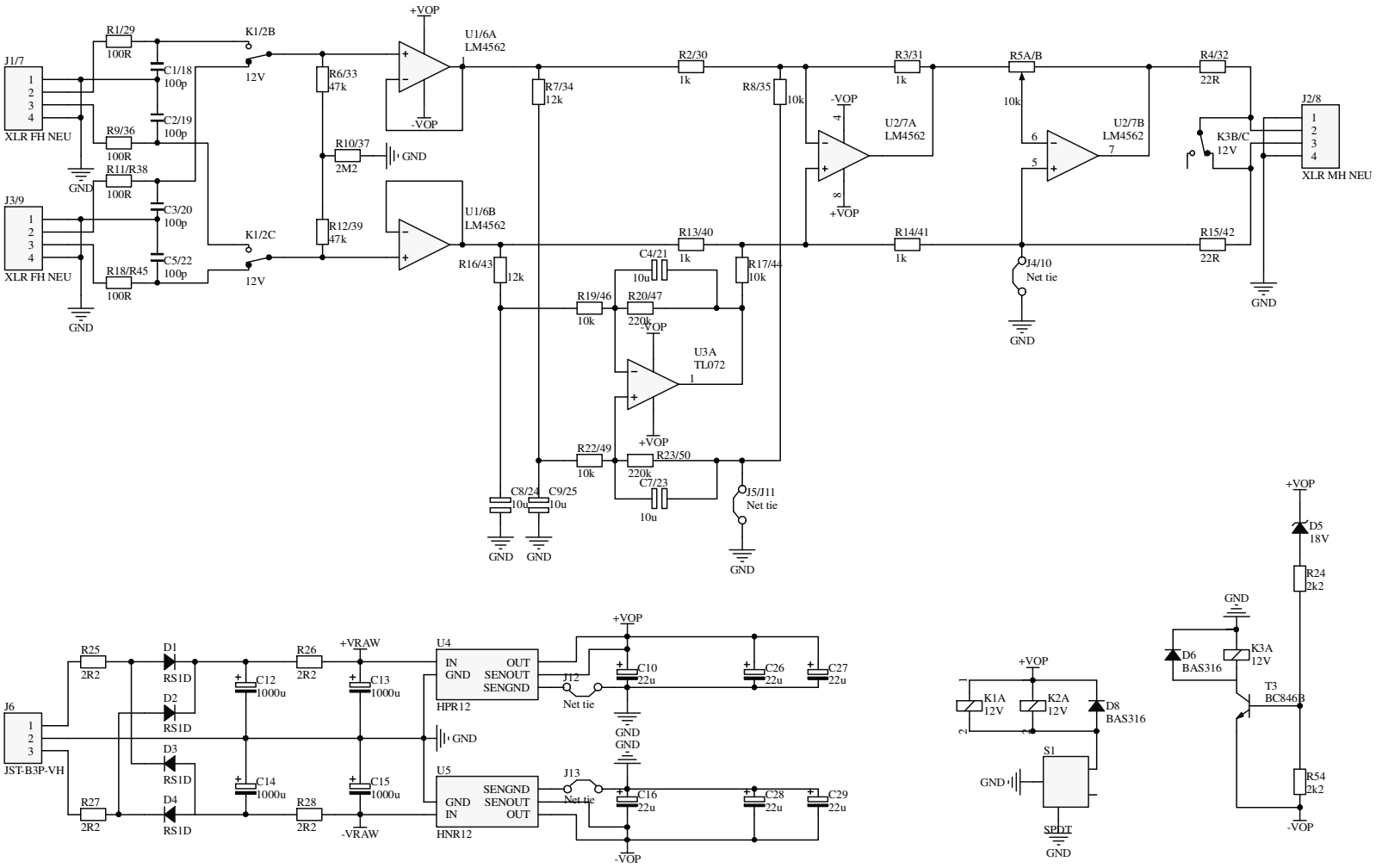
J1/7
XLR FH NEU
J3/9
XLR FH NEU
R1/29
100R
R9/36
100R
R11/R38
100R
R18/R45
100R
C1/18
100p
C2/19
100p
C3/20
100p
C5/22
100p
K1/2B
K1/2C
12V
12V
R6/33
47k
R12/39
47k
R10/37
2M2
+VOP
-VOP
U1/6A
LM4562
U1/6B
LM4562
R7/34
12k
R16/43
12k
R2/30
1k
R13/40
1k
R8/35
10k
R17/44
10k
C4/21
10u
R19/46
10k
R20/47
220k
U3A
TL072
R22/49
10k
R23/50
220k
C7/23
10u
C8/24
10u
C9/25
10u
J5/J11
Net tie
R3/31
1k
R14/41
1k
U2/7A
LM4562
U2/7B
LM4562
R5A/B
10k
J4/10
Net tie
R4/32
22R
R15/42
22R
K3B/C
12V
J2/8
XLR MH NEU
GND


J6
JST-B3P-VH
R25
2R2
R27
2R2
D1
RS1D
D2
RS1D
D3
RS1D
D4
RS1D
C12
1000u
C14
1000u
R26
2R2
R28
2R2
+VRAW
-VRAW
C13
1000u
C15
1000u
U4
HPR12
IN
GND
OUT
SENOUT
SENGND
U5
HNR12
SENGND
SENOUT
OUT
GND
IN
J12
J13
Net tie
C10
22u
C16
22u
C26
22u
C28
22u
C27
22u
C29
22u
+VOP
-VOP
GND


+VOP
K1A
12V
K2A
12V
D8
BAS316
S1
SPDT
GND


+VOP
D5
18V
R24
2k2
GND
D6
BAS316
K3A
12V
T3
BC846B
R54
2k2
-VOP