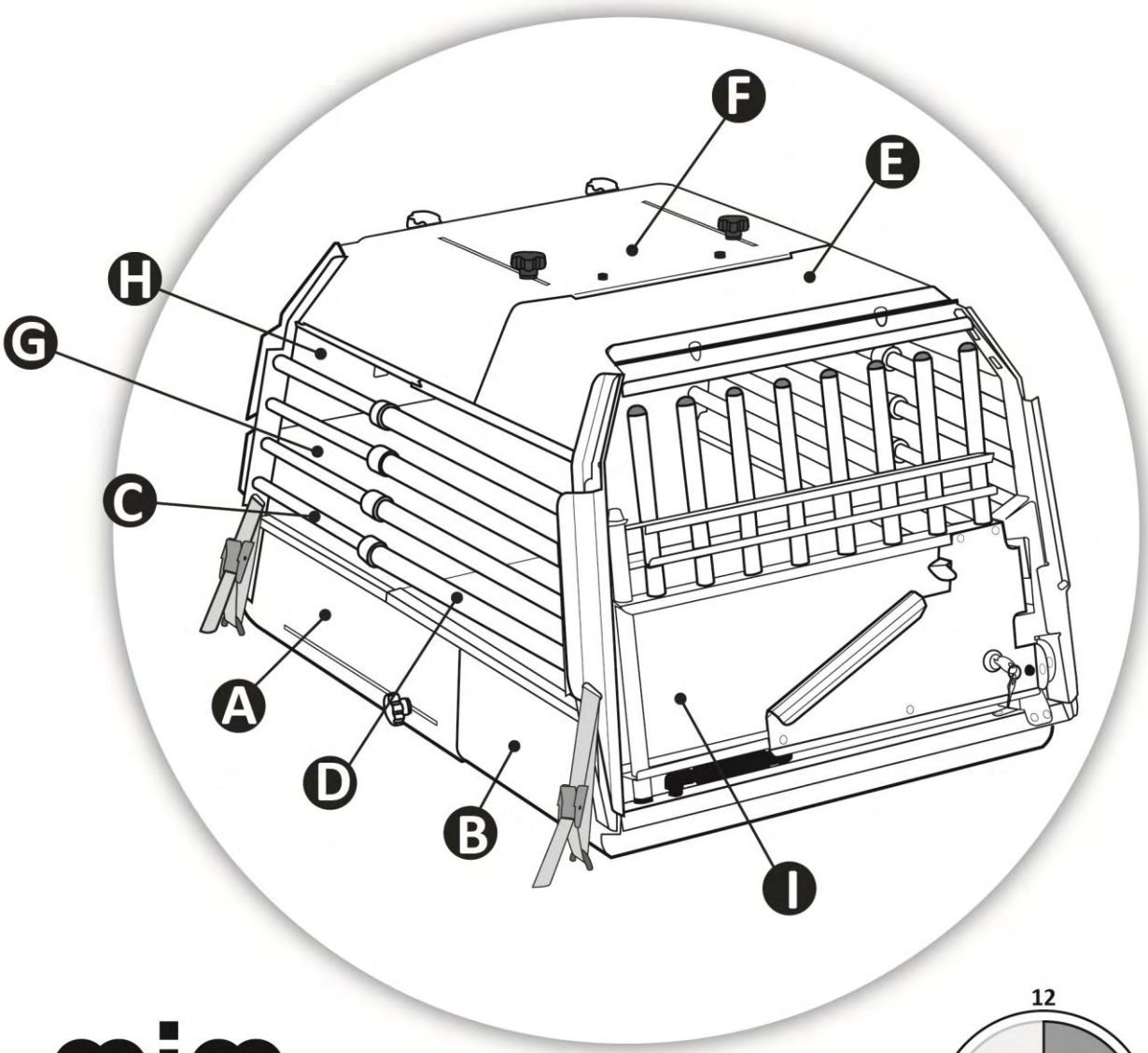

mim CONSTRUCTION

»Variocage/Minimax«

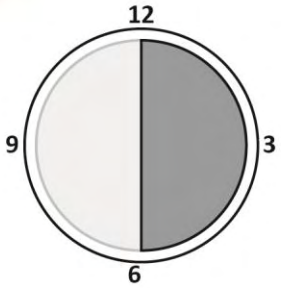

5x M-460641D	14x M-SM6x14IA	2x M-SM6x12	2x M-460641AQ	1x INSEXNYCKEL 4
4x M-R3015M5S, M-B13265SLD, M-VBM5x12	12x M-460641AY	12x M-460641BA	2x M-10240	

© 2014-01-07

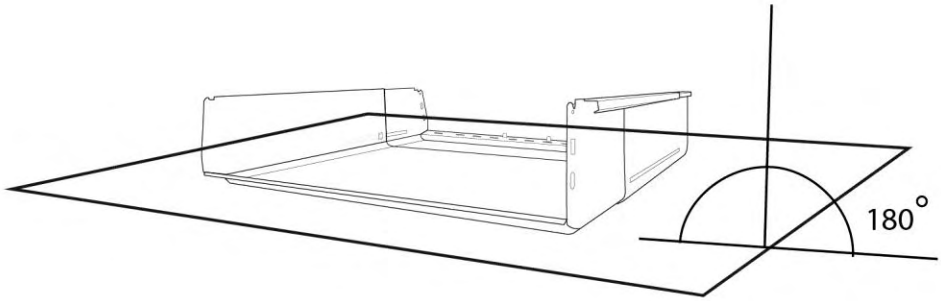
180°

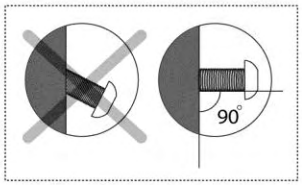
90°

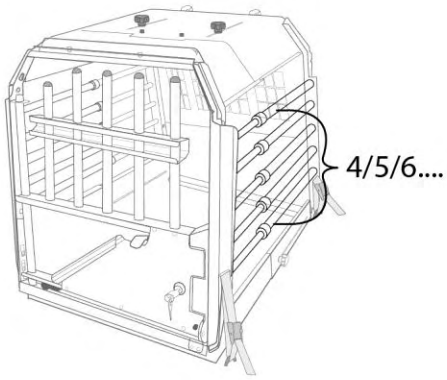
4/5/6....

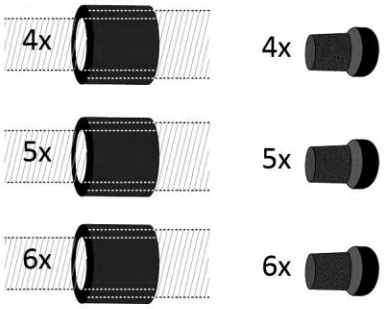
4x
4x
5x
5x
6x
6x

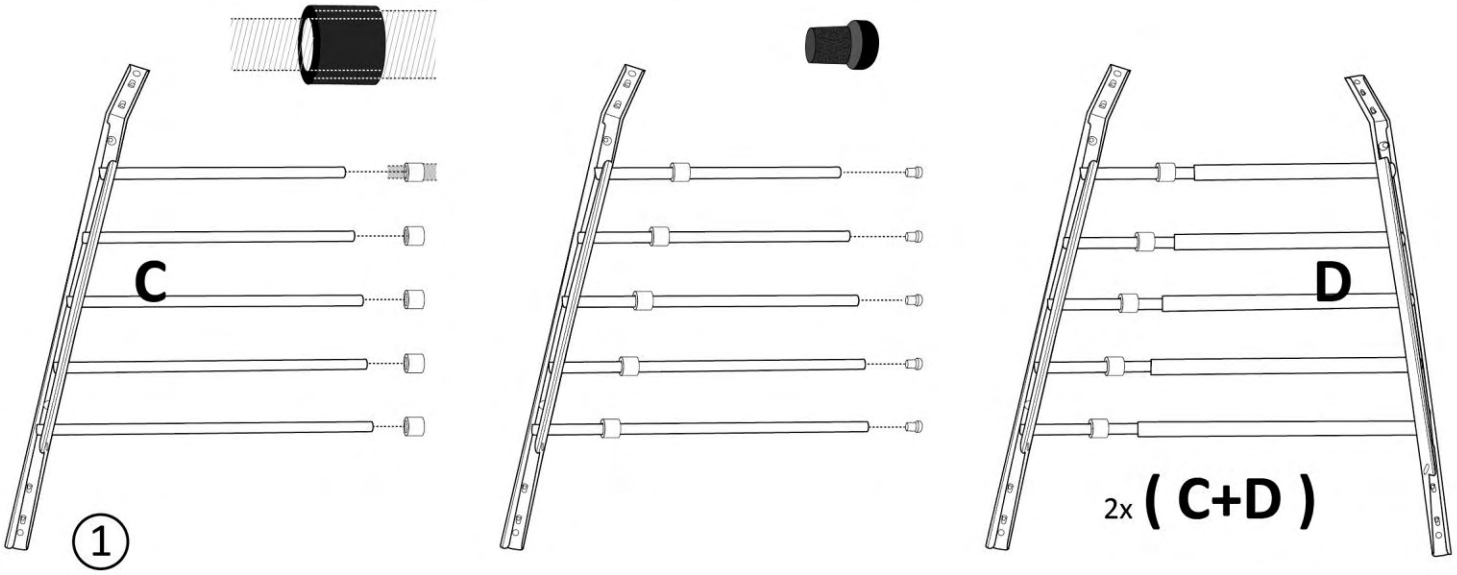
C
D
2x (C+D)
①

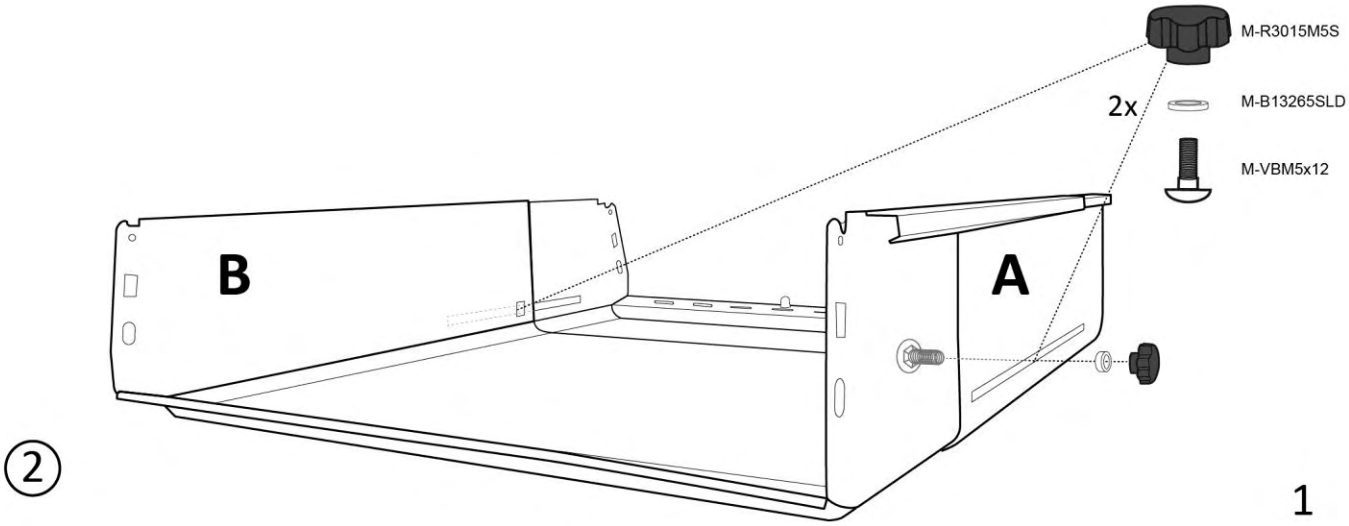
M-R3015M5S
2x
M-B13265SLD
M-VBM5x12
B
A
②

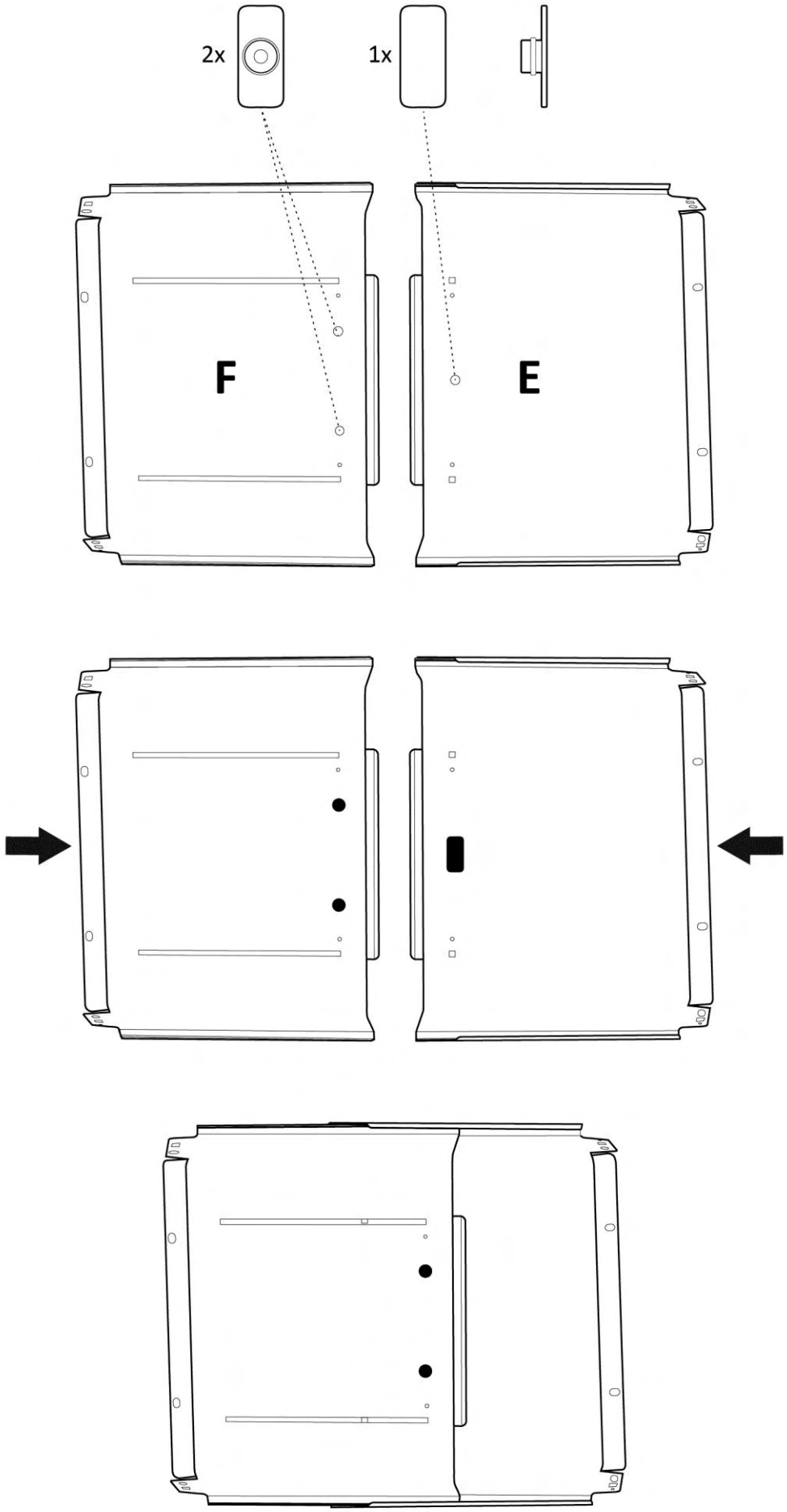

③

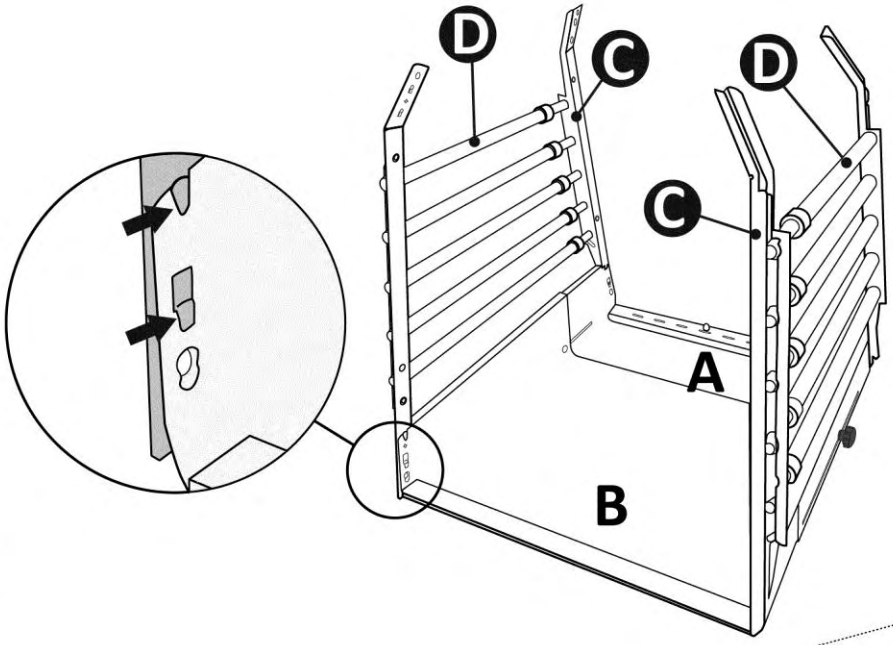

④

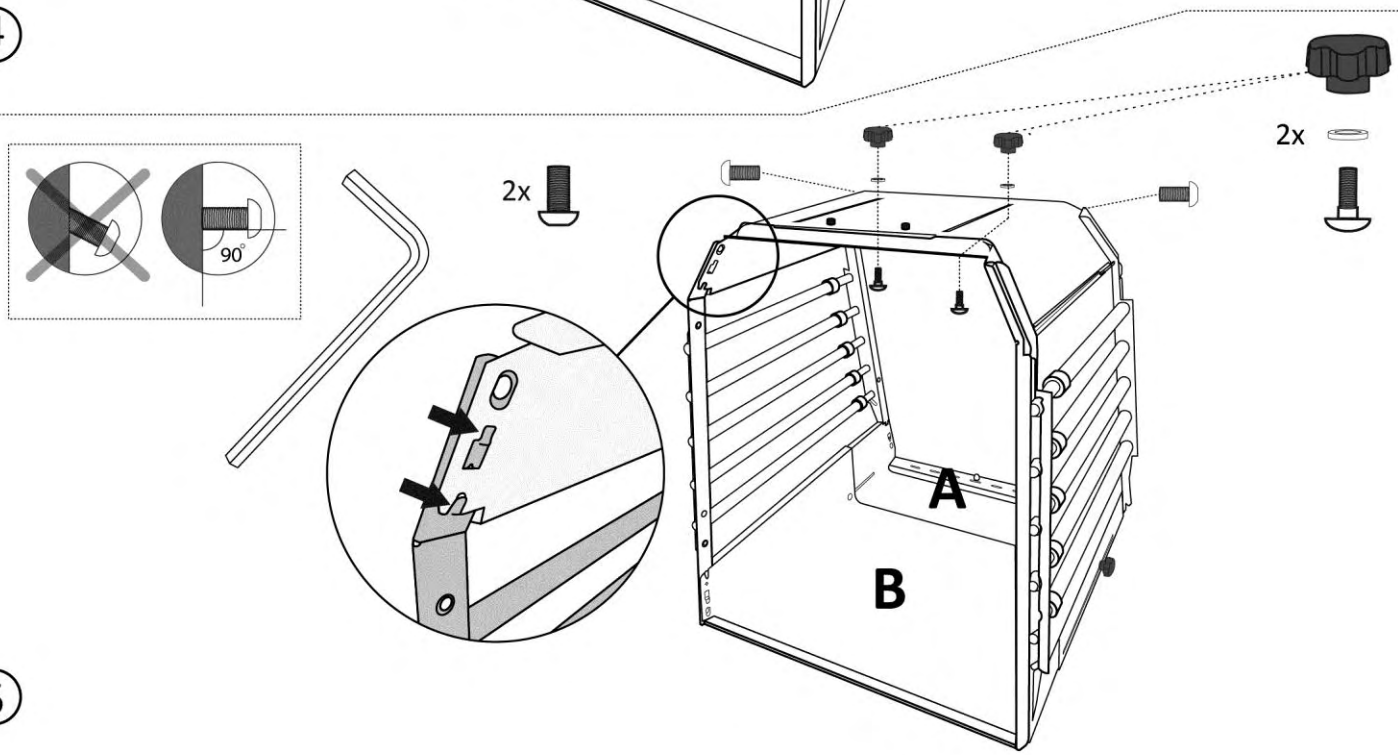

⑤

⑥

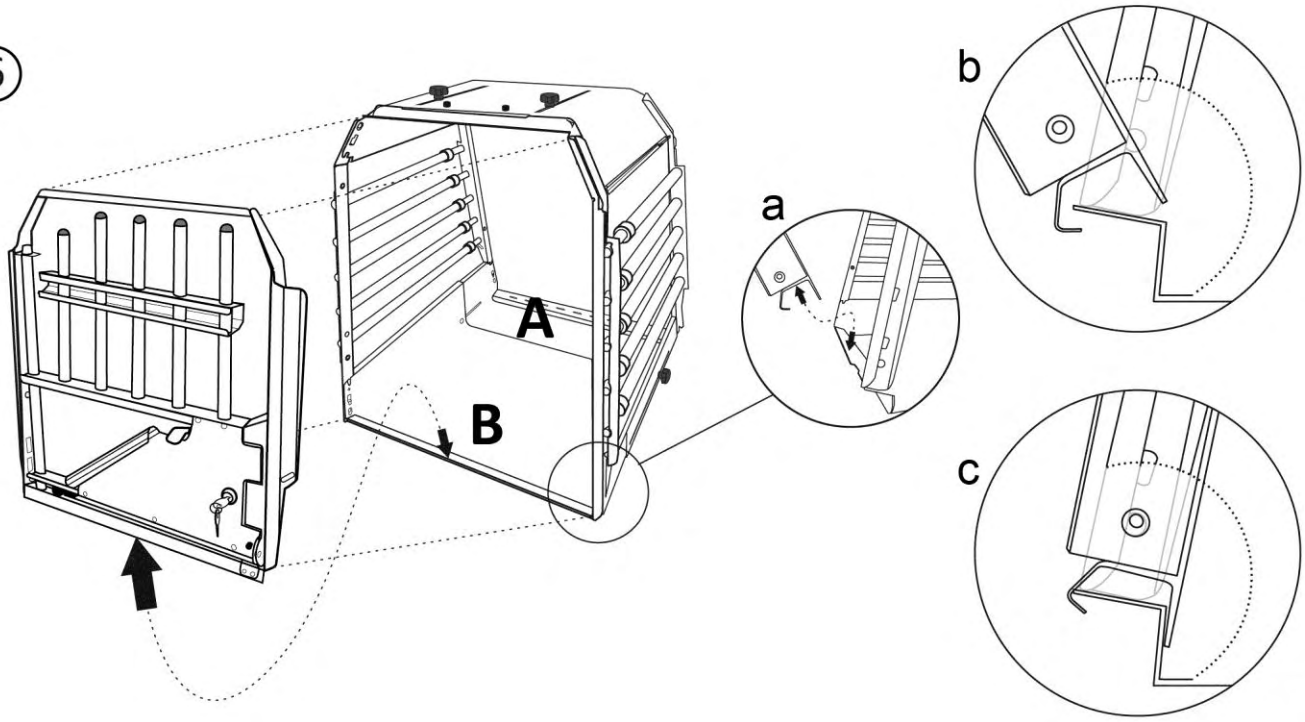

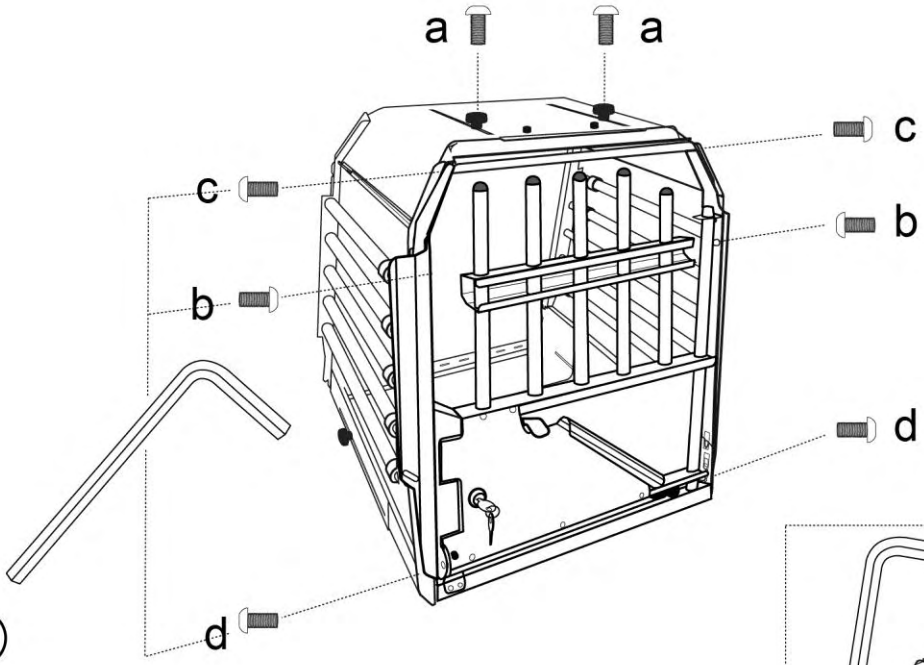
a
a
c
c
b
b
d
d
8x
90°
7

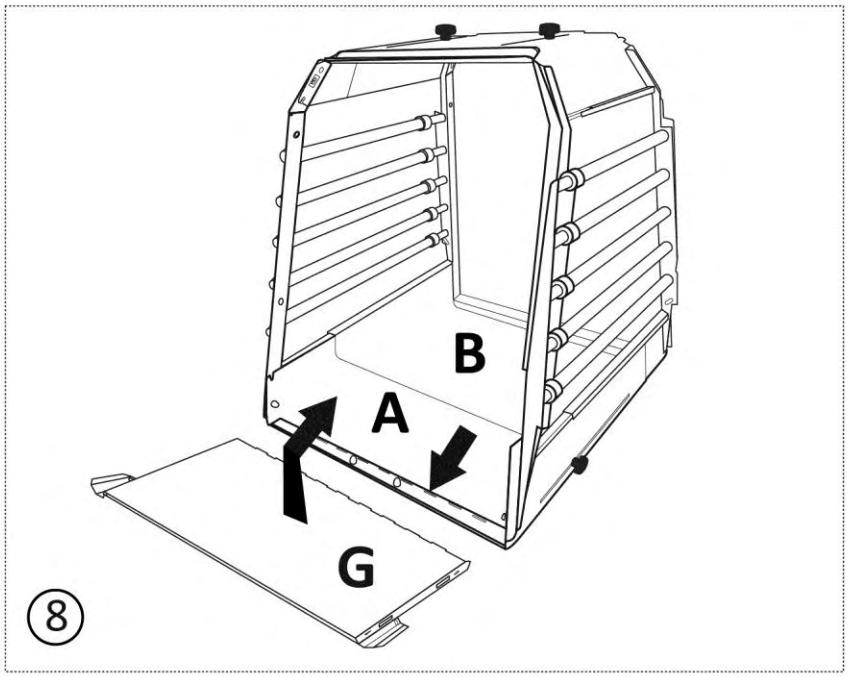
B
A
G
8

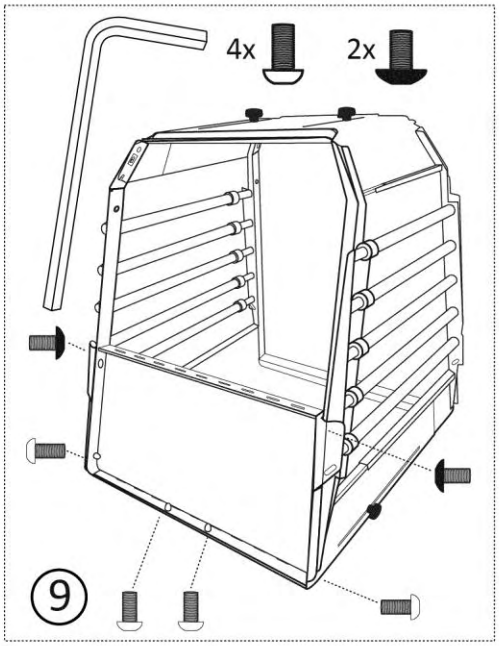
4x
2x
9

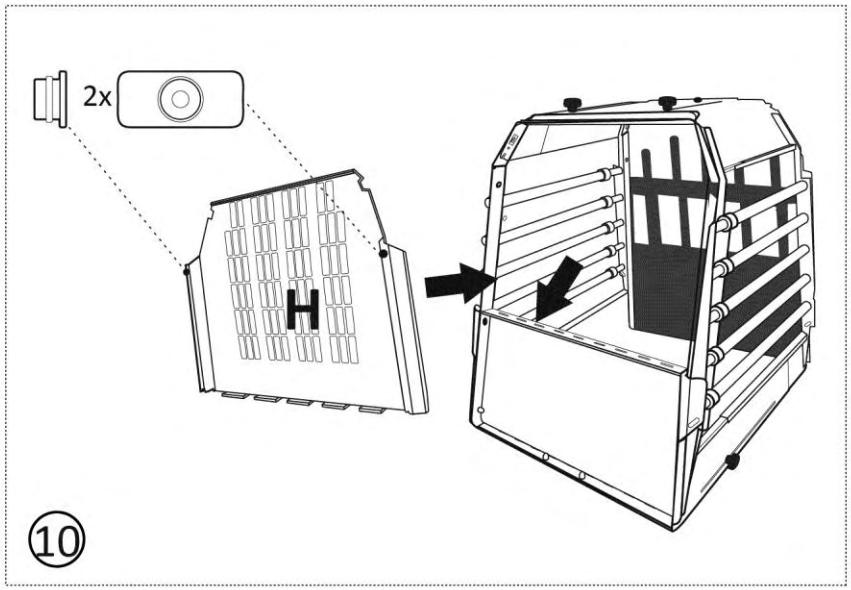
2x
H
10

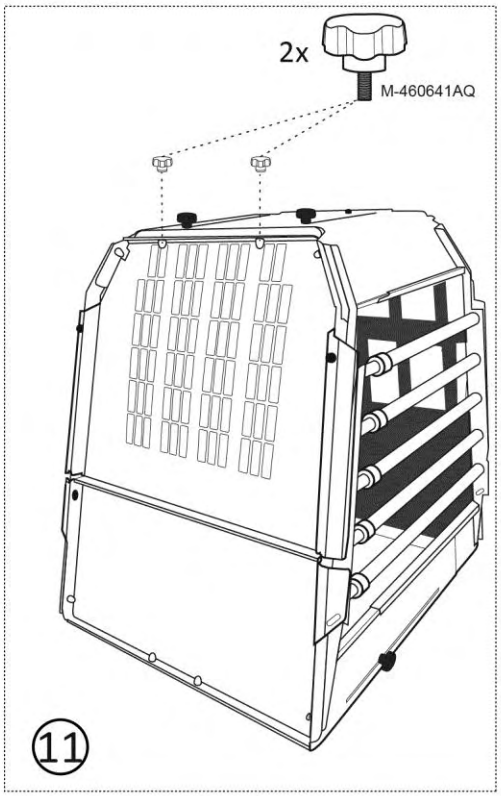
2x
M-460641AQ
11

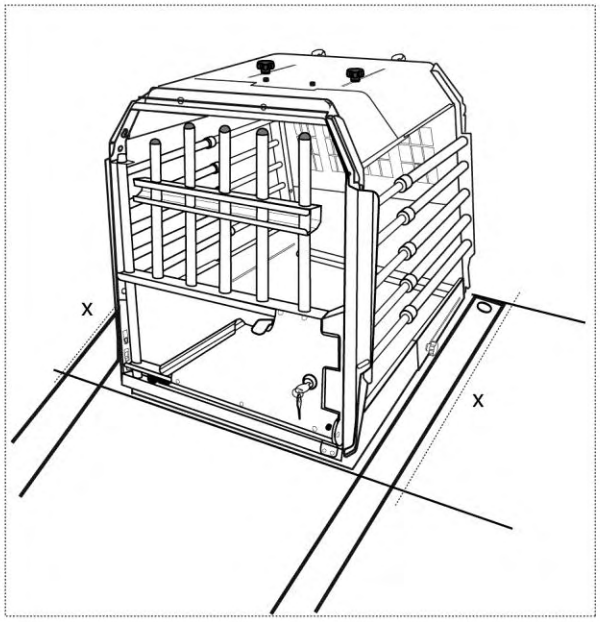
x
x

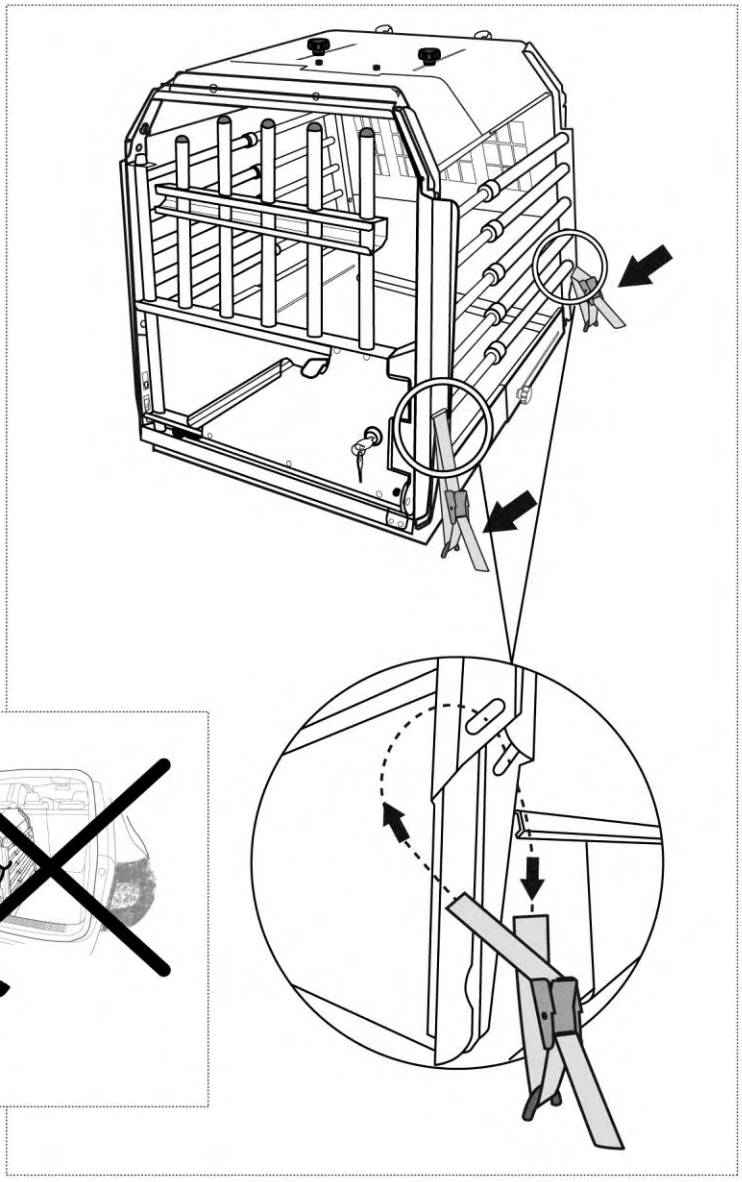

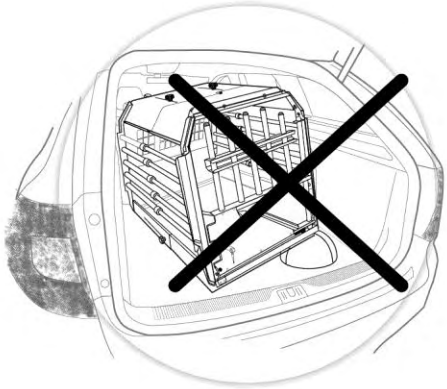

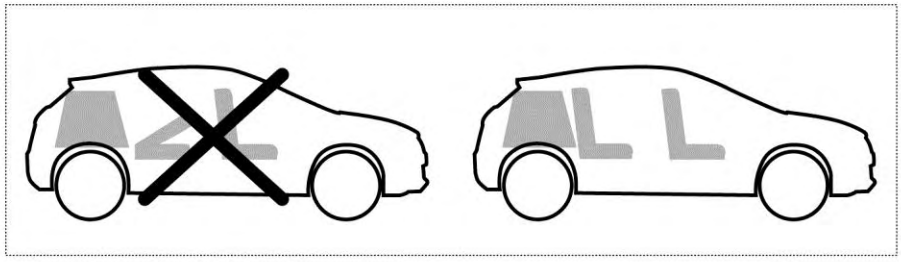

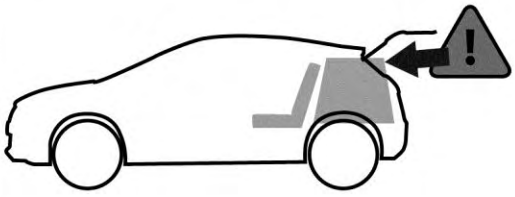

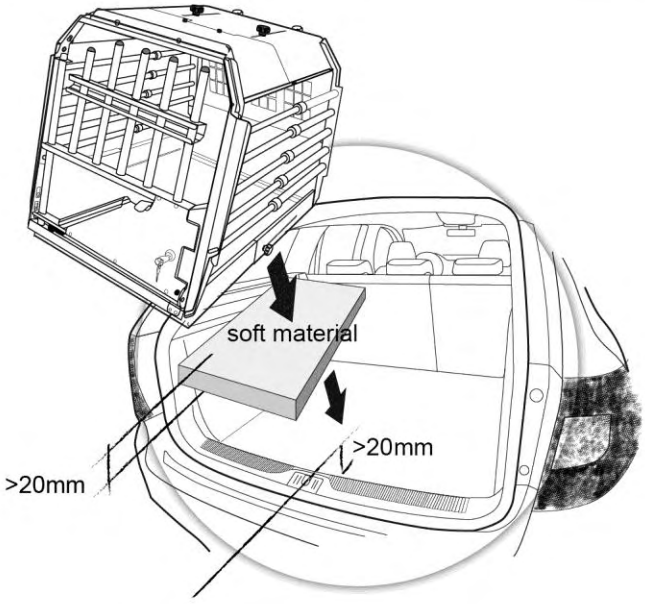
soft material
>20mm
>20mm

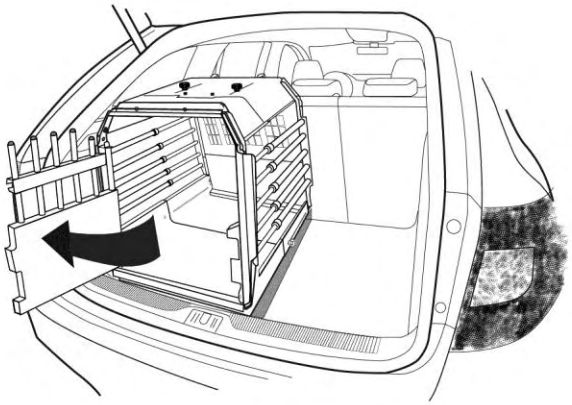

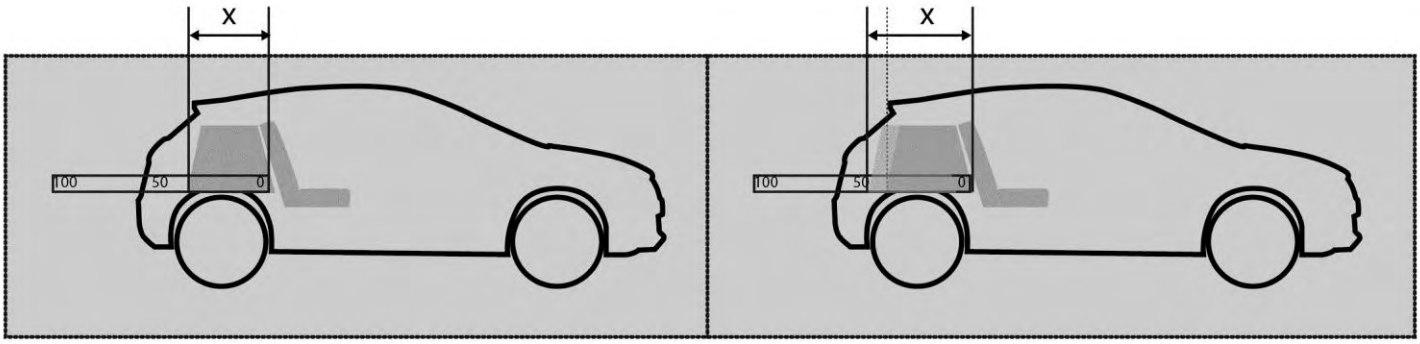

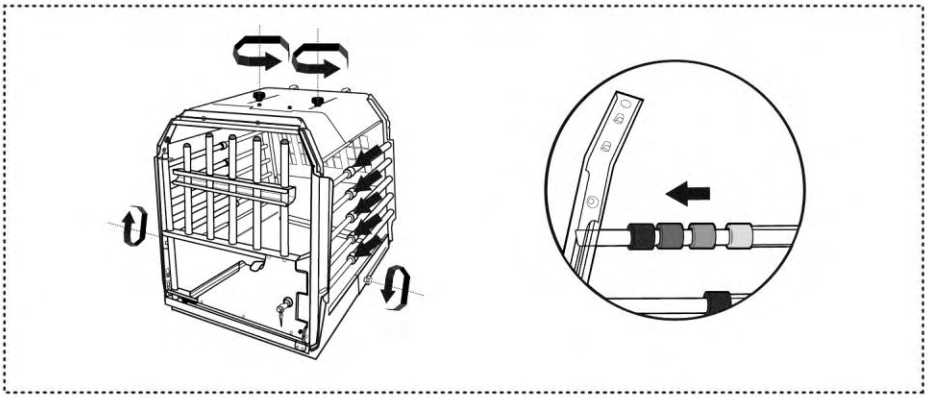

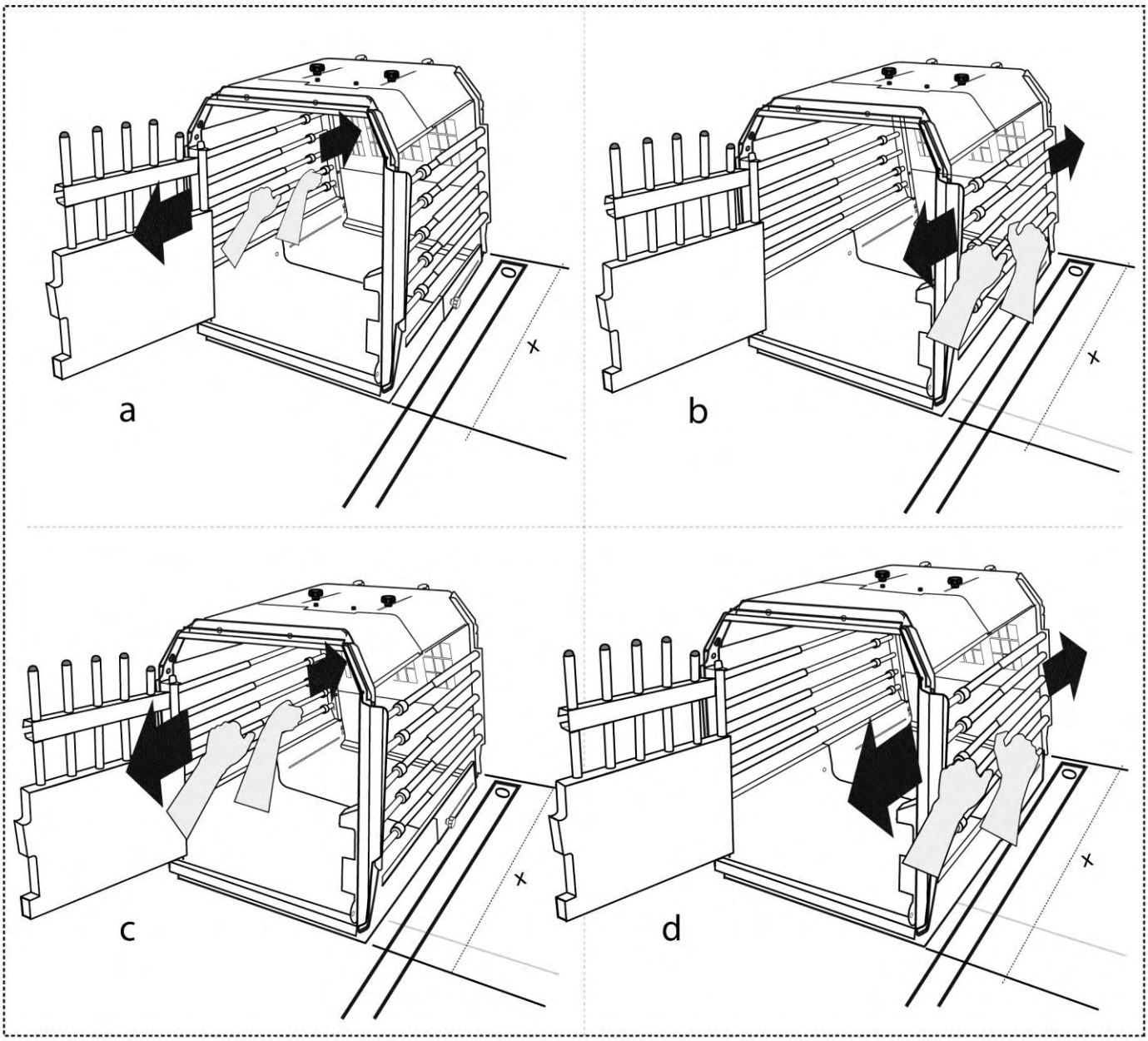
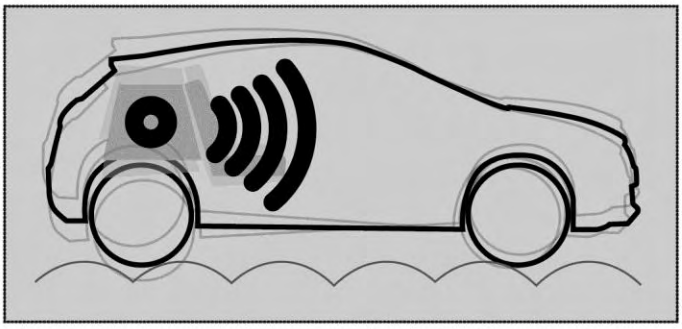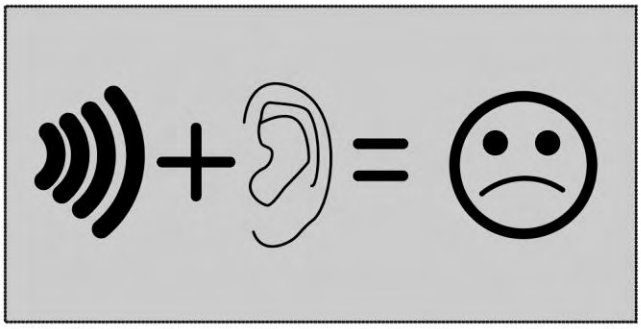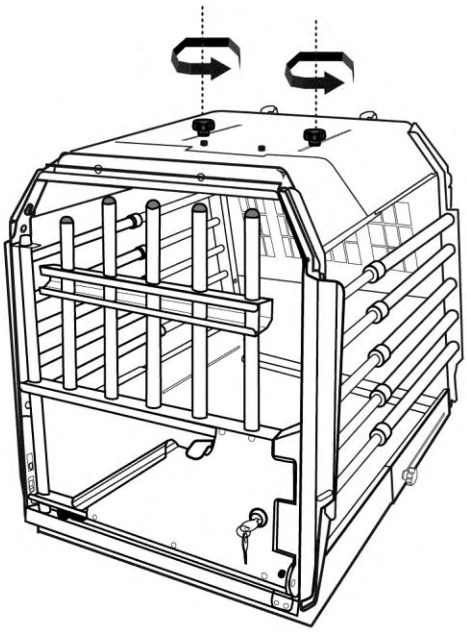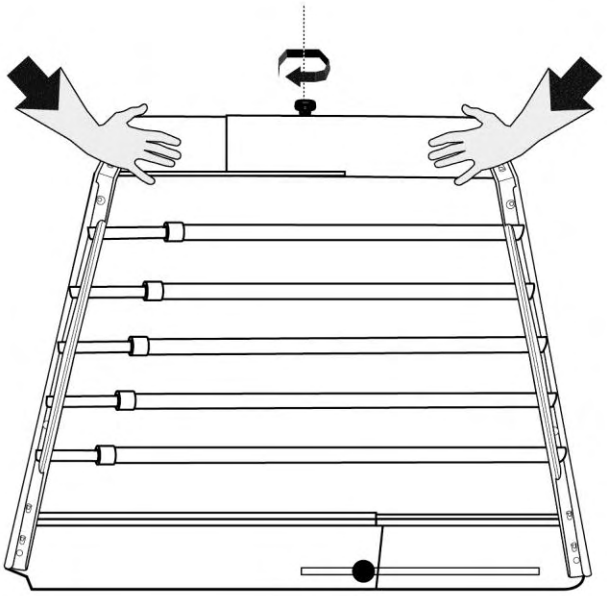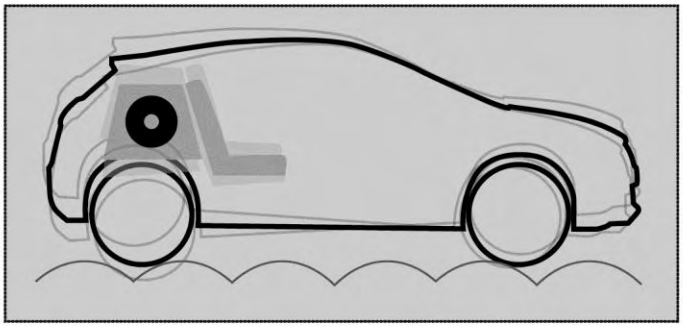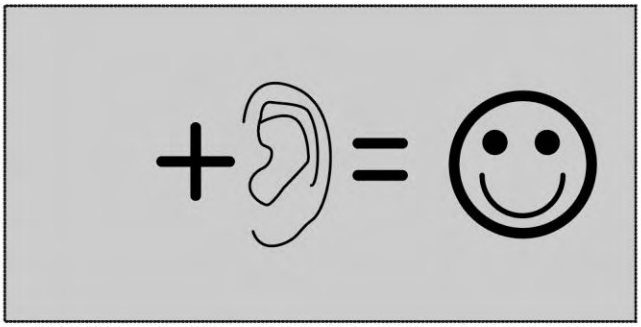
A