ABBA

LIGHTING USA

12V Landscape Light Specialist

CDPS71

INSTALLATION GUIDE

www.ABBALightingUSA.com

ABBA LIGHTING USA
12V Landscape Light Specialist

RATED VOLTAGE 12V AC/DC

Congratulations on your purchase of this high-quality product! We want to ensure that you have the best possible experience with it, so we kindly ask that you take a moment to carefully read and follow all instructions before assembly, installation, and use. By doing so, you'll not only guarantee correct function and safety, but also optimize the full potential of this exceptional product. Thank you for choosing us as your trusted provider of top-notch products - we truly appreciate your business!

IMPORTANT SAFETY INSTRUCTIONS
LIGHTEN LAMP IS HOT!
WARNING: TO REDUCE THE RISK OF FIRE OR INJURY TO PERSONS:

- Please exercise caution when using the lamp, as it tends to HEAT up rapidly. We recommend taking necessary safety measures to ensure optimal usage.
- For your safety, please refrain from touching the HOT lens, guard, or enclosure. We recommend waiting for the product to cool down before handling it.
- To prevent any fire hazards, please ensure that the lamp is kept away from materials that may easily catch fire. We appreciate your cooperation in maintaining a safe and secure environment.
- For safety reasons, we recommend that only a qualified professional install this electrical product.
- Before attempting to install this unit, ensure all power connections are off for your own safety.

WARRANTY

- We stand behind the quality of our product and offer a 2 warranty. Kindly ensure that you keep the proof of purchase as it will be required for any warranty claims.
- Warranty will be void if there is any damage due to improper usage or modification to the fixture.
- Failure to comply with the instruction in this manual may increase the risk of damage or injury and will void warranty.

ABBA LIGHTING USA
12V Landscape Light Specialist

CAUTION:

Fixture(s) must be installed in accordance with all local codes and ordinances.

Do not instal within 10 feet of a pool, spa or fountain

INSTALLATION INSTRUCTION

To ensure optimal performance and safety, it is important to use our fixtures ONLY with a low voltage landscape transformer. This transformer reduces the voltage from 120V to 12V, making it safe and suitable for outdoor use.

When installing the fixture(s), please follow these instructions carefully:

1.Before installation, please ensure that the power is turned off for your safety.

2.Choose the desired location for the path light, keeping in mind the intended lighting effect.

3.Insert the spike into the ground, ensuring it is vertical and firm., apply enough force to ensure it is firmly anchored. Make sure to leave an ample amount of space around the spike to allow for the connection of the wire to the main line.

4.Attach the path light to the top of the ground stake.

5.Gently but firmly push the spike into the ground , making sure it is securely anchored.

6.To establish a dependable and enduring electrical connection between fixture wires and the main line in outdoor or underground installations, it is essential to select a suitable main cable connector designed for direct burial. This connector should be chosen based on its ability to withstand environmental conditions, resist moisture and corrosion, and provide robust insulation. By adhering to industry standards and best practices, including proper wire stripping and secure fastening techniques, a reliable connection can be established, ensuring optimal performance, safety, and longevity of the system.

We recommend using **WN12** waterproof wire nuts (sold separately) for optimal connectivity.

7.Strip the insulation: Carefully strip approximately 3/4 inch (1.9 cm) of insulation from the ends of the two wires you wish to connect. Ensure that the bare metal ends are clean and free from any frayed strands.

8. Align the wires: Hold the stripped ends of the two wires together, aligning them neatly and ensuring that no stray strands are crossing over.

9.Insert the aligned ends of the wires into the wire nut, ensuring that they go all the way in. The bare ends should be completely covered by the wire nut. Twist the wire nut: Firmly twist the wire nut clockwise onto the wires, ensuring a secure connection. Continue twisting until the wire nut is tight and snug. Test the connection: Gently tug on each wire to ensure they are securely held by the wire nut. For added safety, it is recommended to apply electrical tape around the wire nuts and wires as an extra layer of protection.

10.Remember to test the fixture after making any adjustments to ensure it is functioning correctly and that the lighting is set to your preferences.

Once the fixture(s) have been installed securely, it's time to turn on the power and enjoy the enhanced lighting experience! Locate the power switch or breaker that controls the fixture(s) and turn it on.
Take a moment to observe the lighting effect

Remember to regularly maintain and clean the fixture(s) to ensure optimal performance and longevity. Refer to the manufacturer's instructions for specific details on how to care for your particular fixture.
.
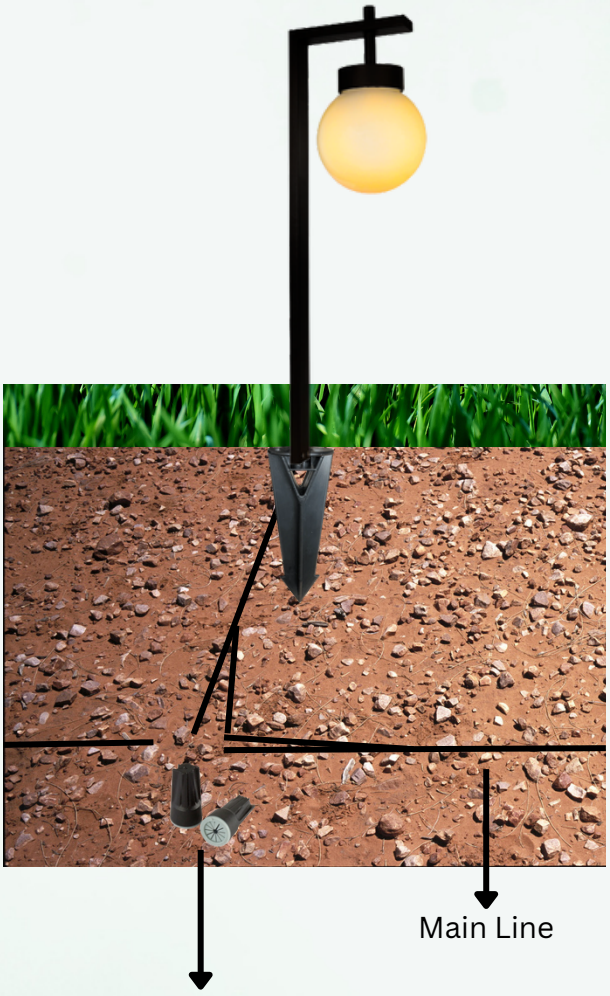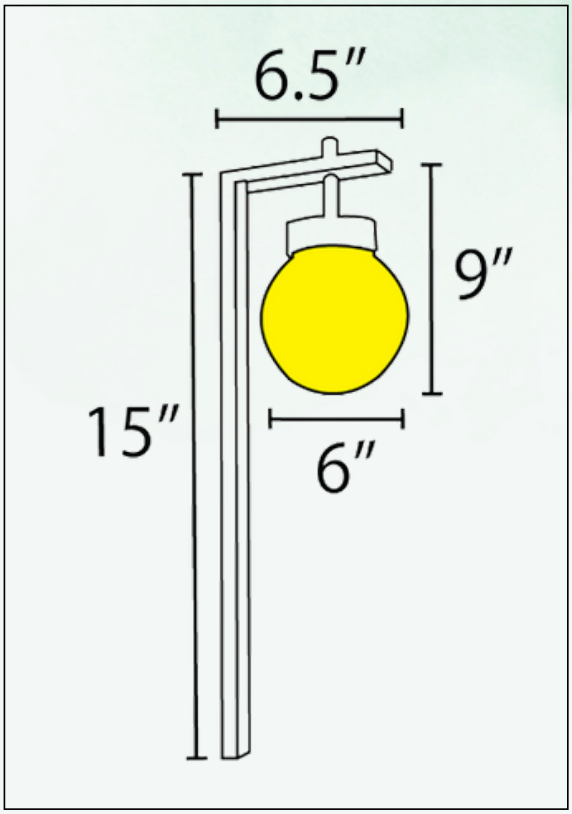
We strongly recommend that the main cable from the transformer be buried underground for safety reasons. Additionally, please be sure to avoid exceeding the maximum wattage on the fixture(s) to prevent any damage or hazards