LATOSCANA

INSTALLATION SUBMITTAL AND DIMENSION

Serie Alessandra

19..136
Floor mounted tub filler.
Rough valve not included.

19CR136 Polished Chrome
19PW136 Brushed Nickel

STANDARDS

- Compliant with ASME A112.18.1 - CSA B125.1
- ADA Compliant

FEATURES

Solid Brass Construction
Single Control Ceramic Disc Valve
Flow rate 7.0 GPM @ 60 PSI
Hand Shower 1.8 gpm @ 80 PSI
Step-By-Step Installation Instructions
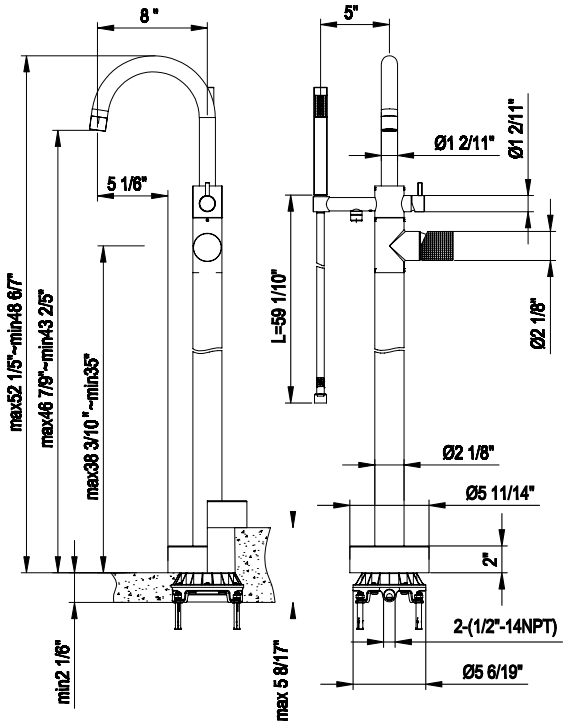
DIMENSIONS