CCA－250

Photo/Visual System Chart

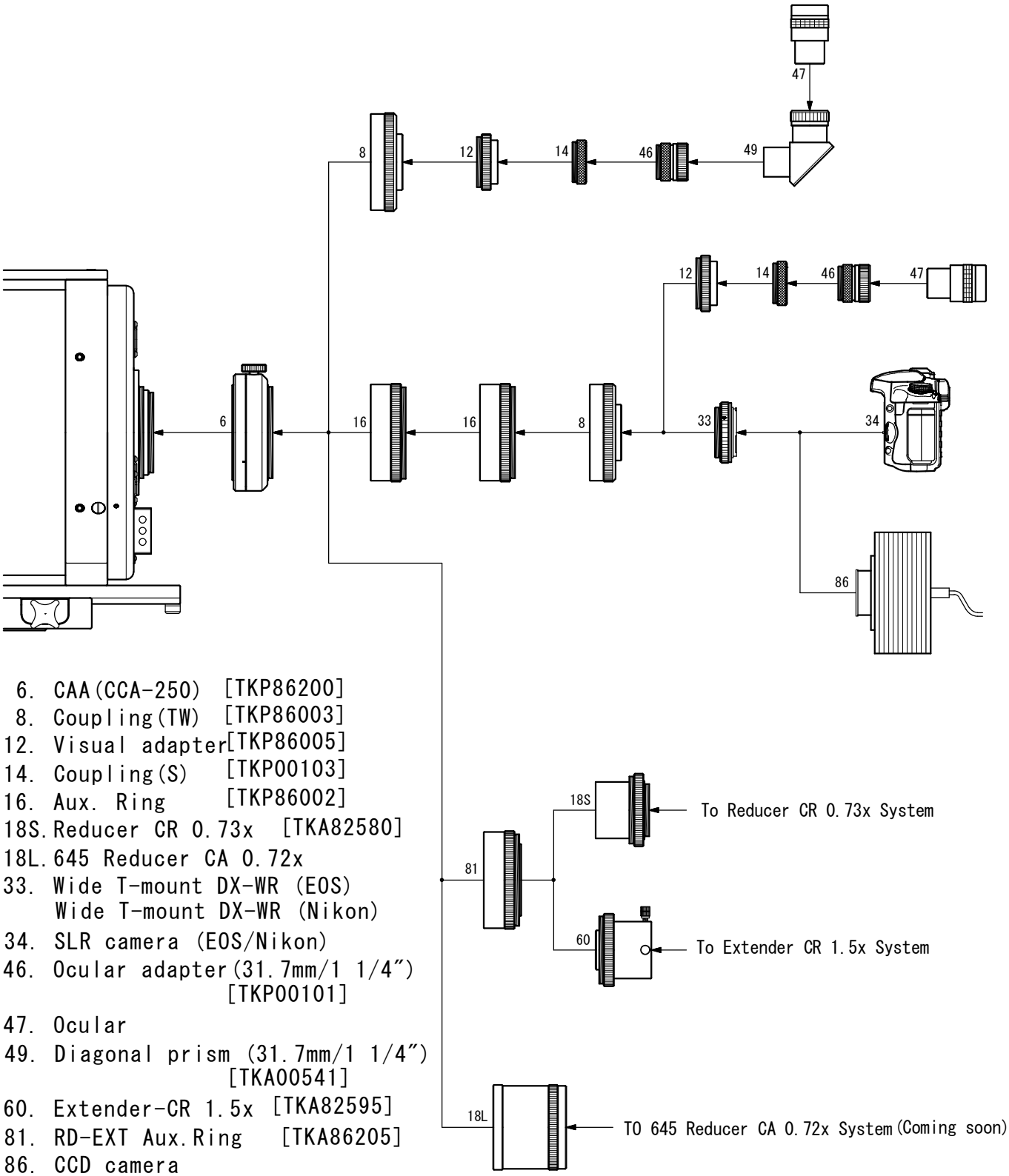

6. CAA(CCA-250) [TKP86200]
8. Coupling(TW) [TKP86003]
12. Visual adapter [TKP86005]
14. Coupling(S) [TKP00103]
16. Aux. Ring [TKP86002]
18S. Reducer CR 0.73x [TKA82580]
18L. 645 Reducer CA 0.72x
33. Wide T-mount DX-WR (EOS)
    Wide T-mount DX-WR (Nikon)
34. SLR camera (EOS/Nikon)
46. Ocular adapter(31.7mm/1 1/4″) [TKP00101]
47. Ocular
49. Diagonal prism (31.7mm/1 1/4″) [TKA00541]
60. Extender-CR 1.5x [TKA82595]
81. RD-EXT Aux.Ring [TKA86205]
86. CCD camera