Askar

103 APO

User's Manual

WARNING!

DO NOT LOOK AT SUN THROUGH TELESCOPE.
IT WILL CAUSE IRREVERSIBLE DAMAGE TO YOUR EYE.

www.sharpstar-optics.com

English

Instructions for use

The Askar 103APO is an OTA with 103mm aperture, 700mm focal length, and f/6.8 native focal ratios. Askar 103APO adopts a triplet air-spaced APO lens design, including one piece of ED glass.

The entire lens tube of Askar 103APO is crafted using high-quality CNC machining, with anodized and surface spray paint treatment. All the inner of the Askar 103APO's dew shield is covered with matting felt, and inside the main tube it is coated with matting paint and equipped with the internal baffle. The retractable design of the dew shield, along with the enlarged locking screw, prevents the dew shield from slipping.

There are two finder bases on both sides of the focuser, which not only eliminates the need for disassembling when changing the position of the finder scope, but also provides additional mounting positions for other astronomical accessories.

The tube rings of the Askar 103APO have a light weight of only 750g. The handle has a special slot design, making it able to attach other accessories which need a finder base. The CNC thumb screws of the tube rings enable easy opening and locking without other tools. The standard Vixen dovetail plate, which is compatible with most equatorial or Altitude-azimuth mounts on the market, has additional screw hole position design for adjust position of the tube ring and the plate. The length of the plate reaches up to 290mm, making it more convenient for balancing on the equatorial mount.

The Askar 103APO adopts segmented lens tube design. It can be attached to a 0.6x reducer or a binoviewer with the extender tube detached. While with the extender, the Askar 103APO can be used with 0.8x reducer or 1x flattener, or attaching a diagonal for visual observation.

In terms of the focuser, the Askar 103APO is equipped with CNC machined dual-speed R&P large 3.3-inch rigid focuser, which can be compatible with most motorized focusers on the market. It provides 100 focusing travel, equipped with a high-precision heavy composition rotator, and adopts laser-engraved scales in the length direction and the circumference direction, which is convenient for user adjustment and information recording. It is also equipped with an enlarged rotator locking screw, preventing image shifting during shooting. Inside the focuser tube there is an anti-reflective internal design and matting paint, providing extra measures to eliminate stray light.

Last but not least, the Askar 103APO is a product that pays great attention to the compatibility of visual accessories, so it is compatible whenever attached to 1.25" or 2" diagonals and eyepieces.

Aperture size: 103mm

Focal length: 700mm

Focal ratio: f/6.8

Objective lens: Triplet air-spaced APO (including one ED glass)

Total length: 600mm (when the dew shield is contracted)

711mm (when the dew shield is stretched)

Net weight: 4.75kg

Gross weight: 5.5kg

Rear-end adapter: 2" adapter, 1.25" adapter

Standard package items: a 103APO OTA, a pair of tube rings, a handle, an Askar 290mm Vixen dovetail plate, a manual, a transportation bag

Products Parts and the Size Diagram

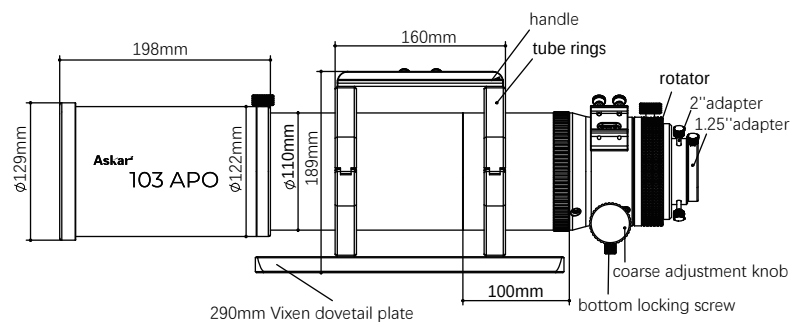

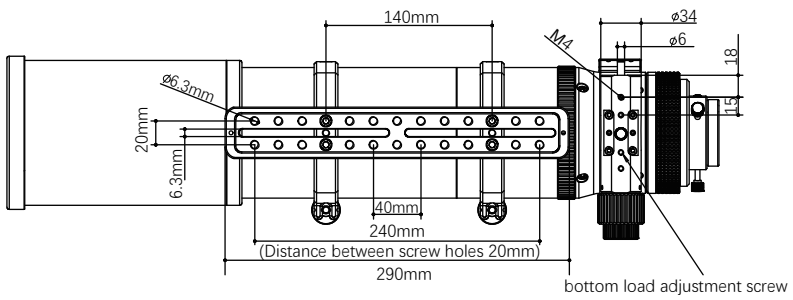

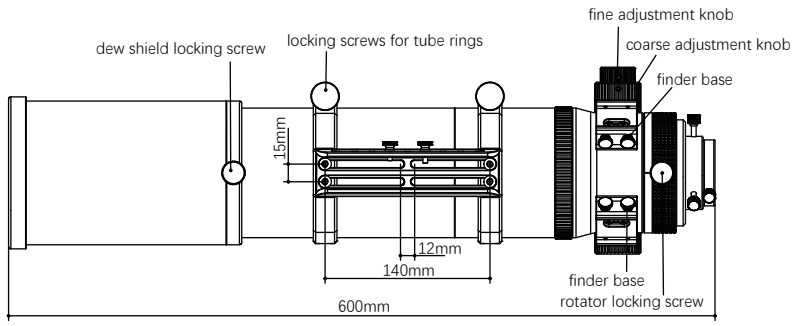

Steps of Detaching the Extender Tube

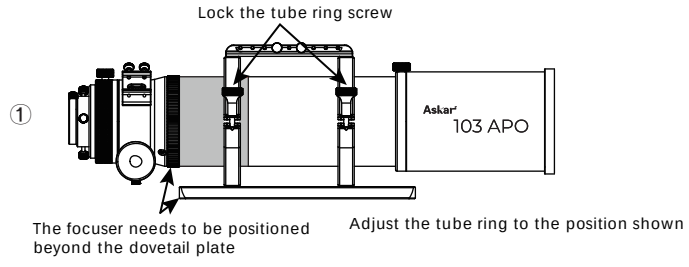

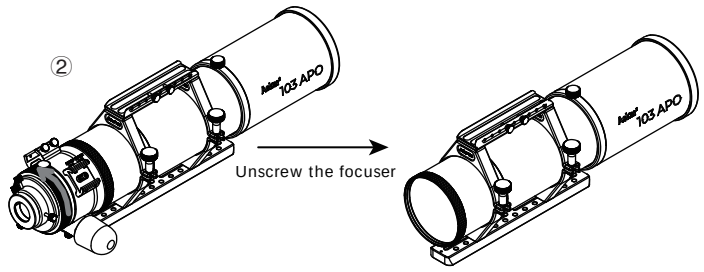

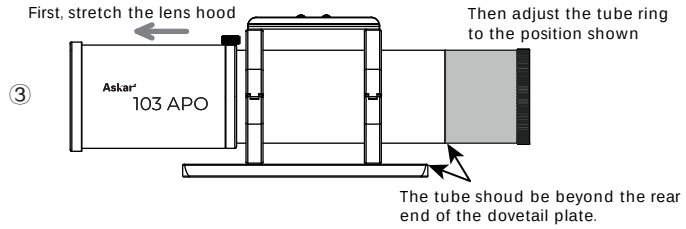

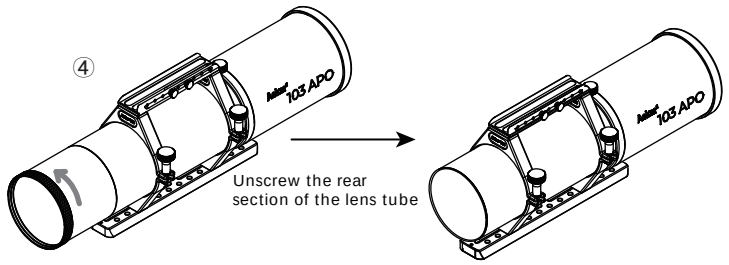

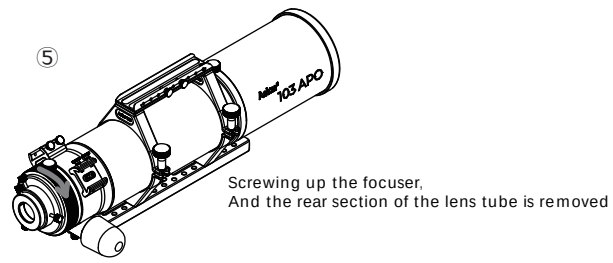

The Locking Screw Position Diagram

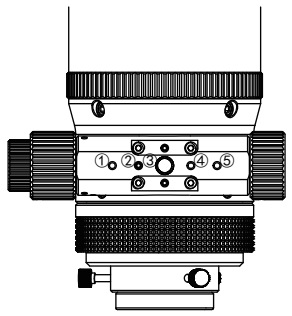

②Bottom Load Adjustment Screw

③Bottom Locking Screw

①③④⑤can be used for electric focusing bracket installation

Items in 103APO Packaging

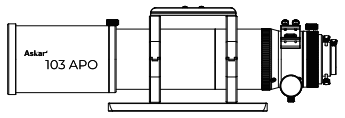

103APO OTA, a pair of tube rings, a handle, a 290mm Vixen dovetail plate

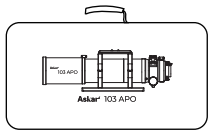

A transportation bag

Instruction manual