Rotary table cylinder——HRQ Series

Product series

HRQ Series	Acting type	Bore size	Collocation of sensor switch DS1-H
Mini Rotary Cylinder 	Double acting	2, 3, 7	● ● ●
Middle-sized Rotary Cylinder 	Double acting	10, 20, 30, 50	● ● ● ●
Large-sized Rotary Cylinder 	Double acting	70, 100, 200	● ● ●
Page 344			397

Please Click Page Code

Installation and application

1. Dirty substances in the pipe must be eliminated before cylinder is connected with pipeline to prevent the entrance of impurities into the cylinder.
2. The medium used by cylinder shall be filtered to 40 μ m or below.
3. Anti–freezing measure shall be adopted under low temperature environment to prevent moisture freezing.
4. If the cylinder is dismantled and stored for a long time, pay attention to conduct anti–rust treatment to the surface. Anti–dust caps shall be added in air inlet and outlet ports.

Back
HRQ

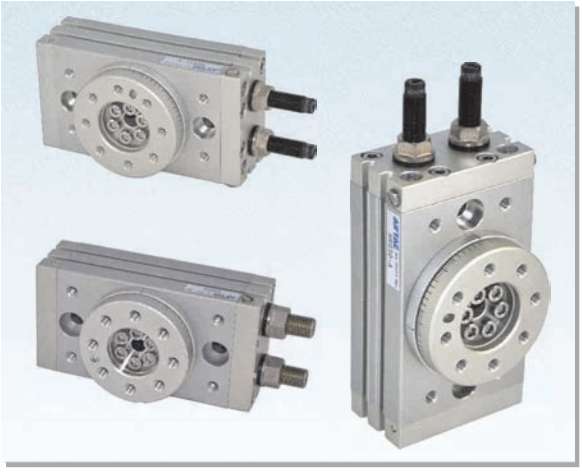

Symbol

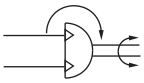

Product feature

1. Rack and pinion design, stable functioning.
2. Double cylinder structure, double output could be achieved.
3. The manufacturing precision of working platform is high, and is easy for installation , and is of precise orientation.
4. The center of working platform has a through hole, and pipe can be located and passed through this hole;
5. Guide hole is designed on the both side of the cylinder body (10~200) or undersurface (2~7), which is simply to install.
6. Two modes of buffer could be chosen, adjustment bolt buffer and internal shock absorber, the maximum buffer energy of internal shock absorber is 3-5 times that of adjustment bolt buffer.

Actual torque output

Applicable type: HRQ2, HRQ3, HRQ7

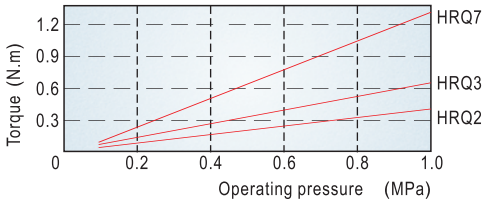

Applicable type: HRQ10, HRQ20, HRQ30, HRQ50

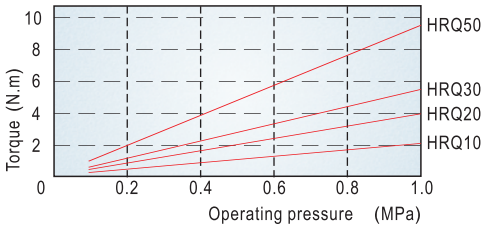

Applicable type: HRQ70, HRQ100, HRQ200

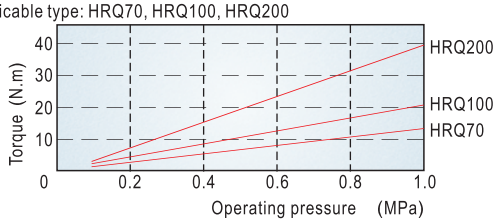

Specification

Specification		2	3	7	10	20	30	50	70	100	200
Acting type		Double rack and pinion(Double acting)									
Fluid		Air(to be filtered by 40 μ m filter element)									
Operating pressure	With adjustment bolt	0.1~0.7MPa(15~100psi)(1.0~7.0bar)			0.1~1.0MPa(15~145psi)(1.0~10.0bar)						
	With internal shock absorber	–			0.1~0.6MPa(15~87psi)(1.0~6.0bar)						
Proof pressure		1.5MPa(218psi)(15.0bar)									
Temperature ℃		0~60									
Angle adjustment range		0~190°							0~190°		
Repeatable precision	With adjustment bolt	0.2°									
	With internal shock absorber	–			0.05°						
Theoretic moment (Nm)(0.5MPa)		0.2	0.33	0.63	1.1	2.2	2.8	5	7.5	11	22
Cushion type	With adjustment bolt	Rubber bumper									
	With internal shock absorber	–			Shock absorber						
Port size	End ports	M5 × 0.8					1/8" ①				
	Side ports						M5 × 0.8				
Weight g		120	175	270	535	940	1260	2060	2890	4100	7650

① PT thread、NPT and G thread are available.

Add) HRQ series are all attached with magnet, please refer to Page 397~420 for the specific content of sensor switch.

Maximum allowed movement energy and rotation times

Model	Maximal allowed energy (J)		Rotation times (s/90°)	
	With adjustment bolt	With internal shock absorber	With adjustment bolt	With internal shock absorber
HRQ2	0.0015	–	0.2~0.7	–
HRQ3	0.002	–	0.2~0.7	–
HRQ7	0.006	–	0.2~1.0	–
HRQ10	0.01	0.04	0.2~1.0	0.2~0.7
HRQ20	0.025	0.12	0.2~1.0	0.2~0.7
HRQ30	0.05	0.12	0.2~1.0	0.2~0.7
HRQ50	0.08	0.30	0.2~1.0	0.2~0.7
HRQ70	0.24	1.1	0.2~1.5	0.2~1.0
HRQ100	0.32	1.6	0.2~2.0	0.2~1.0
HRQ200	0.56	2.9	0.2~2.5	0.2~1.0

Note) ①:The movement energy should not exceed the allowed maximum energy, or the inner accessories of product would be damaged;
②:When the rotation times of with shock absorber is larger than the allowed tolerance, the bigger effect will be lost.

Ordering code

HRQ 20 A □

Model
HRQ: Rotary Table/Rack & Pinion Style

Specification
2 3 7 10 20 30 50 70 100 200

Thread type ①

Blank: PT
T: NPT
G: G

Cushion type

Specification	Cushion type
2 3 7	Blank: With adjustment bolt
10 20 30 50 70 100 200	Blank: With adjustment bolt
	A: With internal shock absorber

Note ①: When it is 2,3,7,10,20 specification, thread type is M5, it is blank here.
Add) HRQ series are all atteched with magnet.

Maximum allowed loading

	Loading type	Model									
		HRQ2	HRQ3	HRQ7	HRQ10	HRQ20	HRQ30	HRQ50	HRQ70	HRQ100	HRQ200
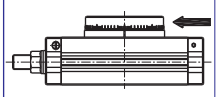	Maximum allowed radial loading (N)	18	30	50	80	150	200	300	330	390	540
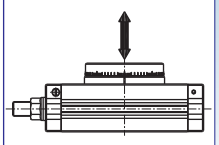	Maximum allowed axial loading (N)	35	50	70	80	150	200	300	300	500	740
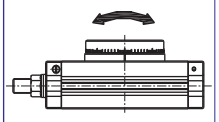	Maximum allowed bending moment (Nm)	0.8	1.1	1.5	2.5	4.0	5.5	10.0	12.0	18.0	25.0

Back
HRQ

Inner structure and material of major parts

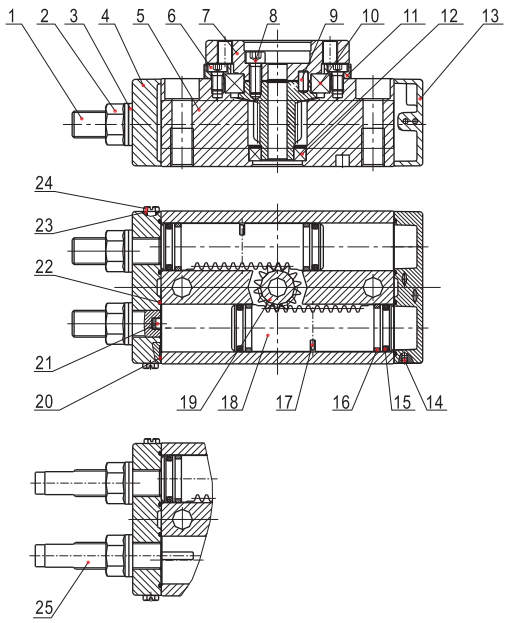

HRQ□–A(With internal shock absorber)

NO.	Item	Material
1	Adjustment bole	Carbon steel
2	Hexagon nut	Carbon steel
3	Seal washer	Carbon steel & Rubber
4	Front cover	Aluminum alloy
5	Body	Aluminum alloy
6	Hexagon socket head set bole	Carbon steel
7	Table	Aluminum alloy
8	Hexagon socket head set bole	Carbon steel
9	Guide pin/flat key	Carbon steel
10	Deep-groove bearing	Subassembly
11	Bearing retainer	Aluminum alloy
12	Deep-groove bearing/Needle bearing	Subassembly
13	Back cover	Aluminum alloy
14	Steel ball	Stainless steel
15	Piston seal	NBR
16	Wear ring	Wear resistant material
17	Magnet	Rare earths
18	Rack	Stainless steel/Carbon steel
19	Pinion	Chrome molybdenum steel
20	O–ring	NBR
21	Bumper	NBR
22	O–ring	NBR
23	O–ring	NBR
24	Hexagon screw	Stainless steel
25	Shock absorber	Subassembly

Dimensions

HRQ2,3,7

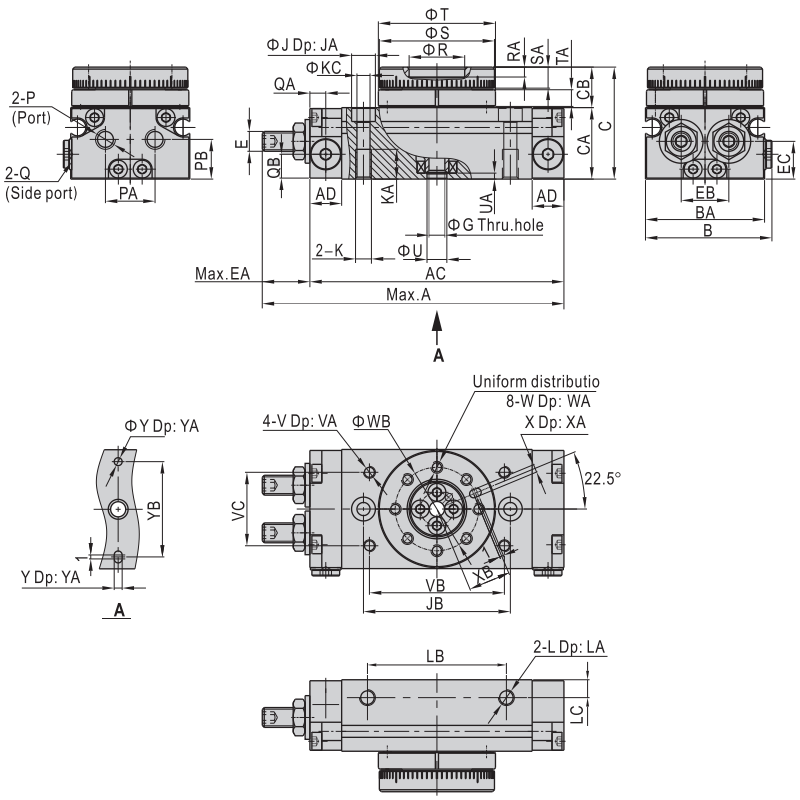

Type\Item	A	AC	AD	B	BA	C	CA	CB	E	EA	EB	EC	G
2	76	64	8	32	30	28	18	10	M5×0.8	12	12	9.5	4
3	82	70	8	36.5	34.5	30.5	20.5	10	M5×0.8	12	15.5	10.5	5
7	94.5	79.5	8	43	41	34.5	23	11.5	M6×1.0	15	18.5	12	6

Type\Item	J	JA	JB	K	KA	KC	L	LA	LB	LC	P	PA
2	6	3.5	37	M4×0.7	7.5	3.5	M4×0.7	4	35	4.5	M5×0.8	12.5
3	7.5	4.5	43	M5×0.8	8.5	4.5	M4×0.7	4	40	4.5	M5×0.8	15.5
7	7.5	4.5	50	M5×0.8	8.5	4.5	M5×0.8	5	50	5	M5×0.8	18.5

Type\Item	PB	Q	QA	QB	R	RA	S	SA	T	TA	U	UA
2	10	M5×0.8	4	6	14(H9)	2.5	29(h9)	5.5	29.5(h9)	4	5(H9)	1.5
3	12	M5×0.8	4	7.5	17(H9)	2.5	33(h9)	5.5	34(h9)	4	6(H9)	1.5
7	14	M5×0.8	4	9	20(H9)	3	39(h9)	6.5	40(h9)	4.5	7(H9)	1.5

Type\Item	V	VA	VB	VC	W	WA	WB	X	XA	XB	Y	YA	YB
2	M3×0.5	3.5	34	18.5	M3×0.5	5.5	21	2(H9)	2	10.5	2(H9)	2	24
3	M3×0.5	3.5	38	23	M3×0.5	5.5	25	2(H9)	2	12.5	2(H9)	2	28
7	M4×0.7	4.5	45	30	M4×0.7	6.5	29	3(H9)	3	14.5	3(H9)	3	32

Back
HRQ

HRQ10~50

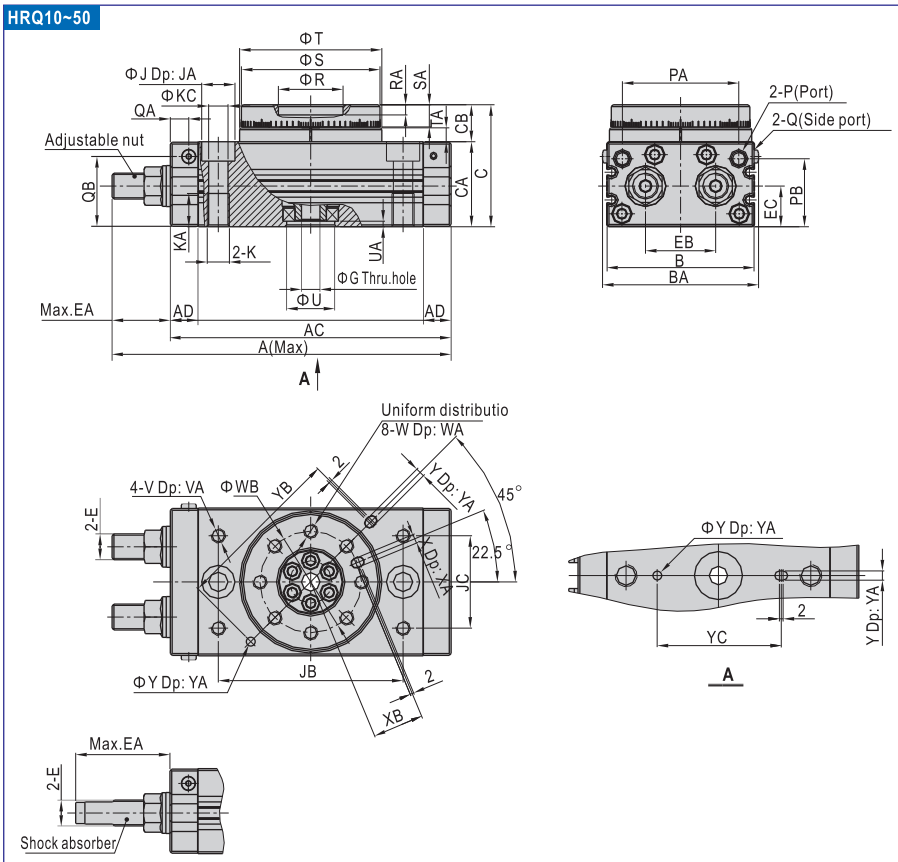

HRQ□–A(With internal shock absorber)

Type\Item	A(With internal shock absorber)	A(With internal Adjustable nut)	AC	AD	B	BA	C	CA	CB	E
10	120.5	109.5	92	9.5	50	54	47	34	13	M10×1.0
20	156	143	117	11	65	69	54	37	17	M12×1.0
30	165.5	152.5	127	11.5	70	74	57	40	17	M12×1.0
50	203	183.5	152	15	80	84	66	46	20	M14×1.5

Type\Item	EA(With internal shock absorber)	EA(With internal Adjustable nut)	EB	EC	G	J	JA	JB	JC
10	28.5	17.5	20.5	15.5	5	11	6.5	60	27
20	39	26	27.5	16	9	14	8.5	76	34
30	38.5	25.5	29	18.5	9	14	8.5	84	37
50	51	31.5	38	22	10	18	10.5	100	50

Type\Item	K	KA	KC	P	PA	PB	Q	QA	QB	R	RA	S	SA	T
10	M8×1.25	12	6.5	M5×0.8	34.5	28	M5×0.8	4.5	29	20(H9)	4.5	45(h9)	8	46(h9)
20	M10×1.5	15	8.5	M5×0.8	47	30	M5×0.8	6	30	28(H9)	6.5	60(h9)	10	61(h9)
30	M10×1.5	15	8.5	1/8"	50	32	M5×0.8	6.5	34	32(H9)	5	65(h9)	10	67(h9)
50	M12×1.75	18	10.5	1/8"	63	38	M5×0.8	10	38	35(H9)	5.5	75(h9)	12	77(h9)

Type\Item	TA	U	UA	V	VA	W	WA	WB	X	XA	XB	Y	YA	YB	YC
10	4.5	15(H9)	3	M5×0.8	8	M5×0.8	8	32	3(H9)	3.5	16	3(H9)	3.5	56	40
20	6.5	17(H9)	2.5	M6×1.0	8	M6×1.0	10	43	4(H9)	4.5	21.5	4(H9)	4.5	74	50
30	6.5	22(H9)	3	M6×1.0	8	M6×1.0	10	48	4(H9)	5	24	4(H9)	4.5	80	58
50	7.5	26(H9)	3	M8×1.25	8	M8×1.25	12	55	5(H9)	6	27.5	5(H9)	5.5	92	68

Back
HRQ

HRQ70~200

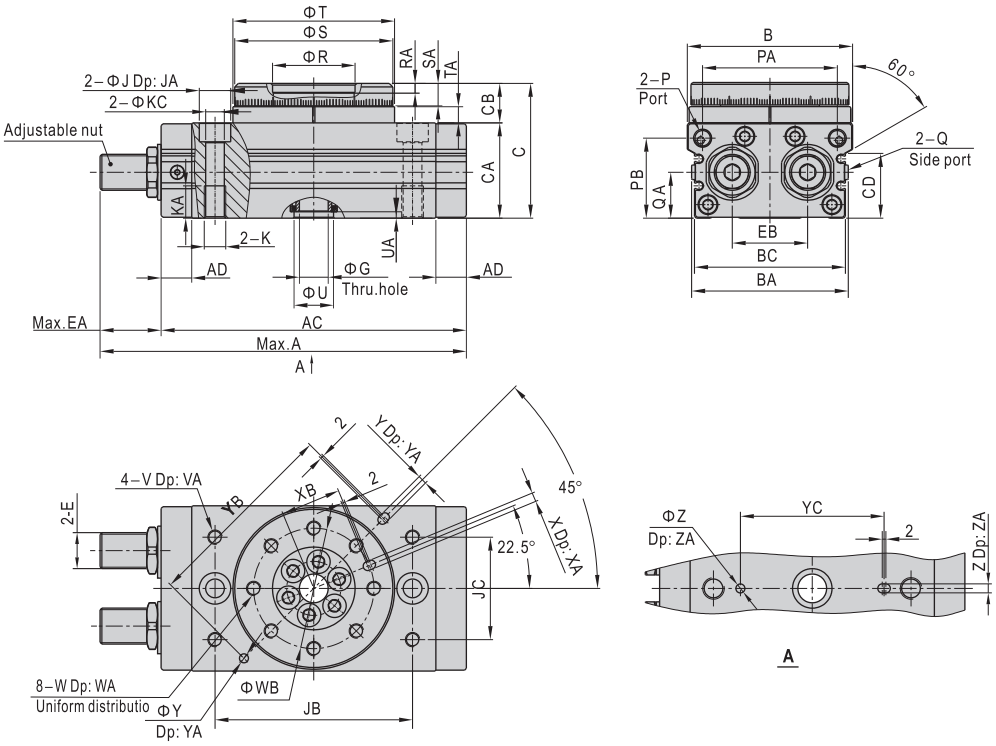

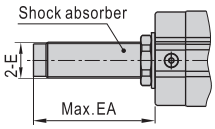

HRQ□−A(With internal shock absorber)

Type\Item	A(With internal Adjustable nut)	A(With internal shock absorber)	AC	AD	B	BA	BC	C	CA	CB	CD
70	204	238	170	17	92	88	84	75	53	22	36
100	223	257	189	17	102	99	95	86	59	27	42
200	276.5	314.5	240	24	120	117	113	106	74	32	57

Type\Item	E	EA(With internal Adjustable nut)	EA(With internal shock absorber)	EB	G	J	JA	JB	JC	K
70	M20 × 1.5	34	68	42	16	17.5	10.5	110	57	M12 × 1.75
100	M20 × 1.5	34	68	50	19	17.5	10.5	130	66	M12 × 1.75
200	M27 × 1.5	36.5	74.5	60	24	20	12.5	150	80	M16 × 2.0

Type\Item	KA	KC	P	PA	PB	Q	QA	R	RA	S	SA	T	TA	U	UA	V	VA
70	18	10.5	1/8"	75	44.5	M5 × 0.8	25.5	46(h9)	5	88(h9)	12.5	90(h9)	9	22(H9)	3.5	M8 × 1.25	10
100	18	10.5	1/8"	85	50.5	M5 × 0.8	29.5	56(h9)	6	98(h9)	14.5	100(h9)	12	24(H9)	3.5	M8 × 1.25	10
200	25	14	1/8"	103	63	M5 × 0.8	36.5	64(h9)	9	116(h9)	16.5	118(h9)	15	32(H9)	5.5	M12 × 1.75	13

Type\Item	W	WA	WB	X	XA	XB	Y	YA	YB	YC	Z	ZA
70	M8 × 1.25	12.5	67	5(H9)	5.5	33.5	5(H9)	3.5	110	80	5(H9)	3.5
100	M10 × 1.5	14.5	77	6(H9)	6.5	38.5	6(H9)	4.5	120	100	6(H9)	4.5
200	M12 × 1.75	16.5	90	8(H9)	8.5	45	8(H9)	4.5	140	110	8(H9)	6.5

Back
HRQ

How to select product

1. Determine the following working conditions according to the actual situation:

1.1) Rotation angle θ: The actual rotation angle must be within the maximum allowed range of rotation angle of cylinder.

1.2) Rotation time t: The rotation time must be within the maximum allowed range of rotation time of cylinder.

1.3) Installation position of cylinder: Allow enough installation space, so as to ensure leaving adequate space for rotation of cylinder and workpieces.

1.4) Determination of loading mass and loading shape.

2. Calculation of necessary forgue needed when loading rotation (T(N.m):

Calculate the necessary moment required for loading rotation according to the formula below, and combine with the forgue diagram of actual effect, to choose pneumatic cylinder with suitable forgue output.

$T=K\times I\times \dot{\omega}$ $\dot{\omega}=\frac{2\theta}{t^2}$	T:Necessary forgue required for loading rotation (N.m) K:Coefficient of allowance, K is defined as 5 I:Moment of inertia（$kg.m^2$） $\dot{\omega}$:Angular acceleration（rad/s^2） θ :Rotation Angle（rad） t:Rotation time（s）

2.1、Calculation method of moment of inertia in different conditions

Diagram	Description	Calculation formula of moment of inertia	Rotation radius
Disk 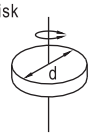	d:Diameter (m) m:Mass (kg)	$I=\frac{md^2}{8}$	$\frac{d^2}{8}$
		Note: no special installation direction	
Classified disk 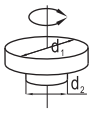	d_1:Diameter(m) d_2:Diameter(m) m_1:d_1 Mass(kg) m_2:d_2 Mass(kg)	$I=\frac{m_1d_1^2+m_2d_2^2}{8}$	$\frac{d_1^2+d_2^2}{8}$
		Note: compare d_1 with d_2, disregard d_1 if d_1 is extremely tiny	
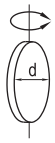	d:Diameter (m) m:Mass (kg)	$I=\frac{md^2}{16}$	$\frac{d^2}{16}$
		Note: no special installation direction	
Sphere 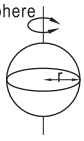	r:Radius(m) m:Mass(kg)	$I=\frac{2mr^2}{5}$	$\frac{2r^2}{5}$
		Note: no special installation direction	
Thin-stick 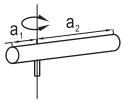	a_1:Length of stick(m) a_2:Length of stick(m) m_1:a_1 Mass(kg) m_2:a_2Mass(kg)	$I=\frac{m_1a_1^2+m_2a_2^2}{3}$	$\frac{a_1^2+a_2^2}{3}$
		Note: 1. horizontal installation. 2. pay attention to the change of movement time when vertical installation.	
Rectangle sheet 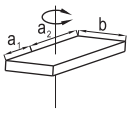	a_1:Sheet length (m) a_2:Sheet length (m) b: Length of side(m) m_1:a_1 Mass(kg) m_2:a_2 Mass(kg)	$I=\frac{m_1(4a_1^2+b^2)+m_2(4a_2^2+b^2)}{12}$	$\frac{2a_1^2+2a_2^2+b^2}{6}$
		Note: 1. horizontal installation. 2. pay attention to the change of movement time when vertical installation.	
Rectangle sheet 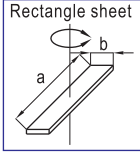	a:Sheet length (m) b:Length of side(m) m:Mass(kg)	$I=\frac{m(a^2+b^2)}{12}$	$\frac{a^2+b^2}{12}$
		Note: no special installation direction	

Diagram	Description	Calculation formula of moment of inertia	Rotation radius
Rectangle sheet 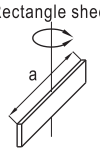	a:Sheet ength (m) m:Mass (kg)	$I=\frac{ma^2}{12}$	$\frac{a^2}{12}$
		Note: no special installation direction	
Rectangle sheet 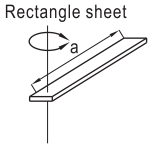	a:Sheet ength (m) m:Mass(kg)	$I=\frac{ma^2}{3}$	$\frac{a^2}{3}$
		Note: 1. horizontal installation. 2. pay attention to the change of movement time when vertical installation.	
Rectangle sheet 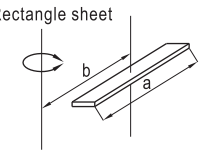	a:Sheet length (m) b:Distance between the rotation axis and the gravity center of loading (m) m:Mass(kg)	$I=\frac{ma^2}{12}+mb^2$	$\frac{a^2}{12}+b^2$
		Note: the cuboids are same too.	
Concentrated load 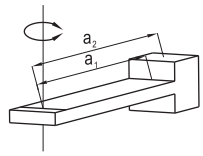	a_1:Vertical distance between the rotation axis and the concentrated loading(m) a_2:Length of arm(m) m_1:Mass of concentrated loading(kg) m_2:Mass of arm(kg)	$I=m_1a_1^2+\frac{m_2a_2^2}{3}+m_1K$	
		Note: 1. horizontal installation. 2. compared with m, disregard if m is extremely tiny. 3. calculate K according to the shape of concentrated loading row by row. For example, when the loading is spheroid, $K=\frac{2r^2}{5}$	
Gear 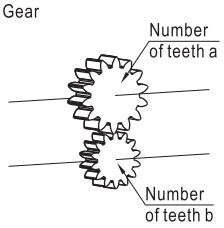	a:Tooth number of gear b:Tooth number of loading gear	$I_a=(\frac{a}{b})^2I_b$	

3. Calculation of maximum movement energy E_{max}(J):

Calculate the maximum movement energy E_{max} according to the formula below, and make sure that the maximum movement energy is within allowed energy range of the chosen pneumatic cylinder, excessive large movement energy would lead to damage of inner parts, please choose rotation cylinder attached with shock absorber when the movement energy is fairly large.

$E_{max}=\frac{1}{2}I\omega^2_{max}$	$\omega_{max}=\frac{2\theta}{t}$	ω_{max}: Maximal angular velocity(rad/s)

4. Calculation of loading rate

Calculate the loading rate according to the formula below, and the loading rate must not be more than 1.

$$\text{Loading rate}=\frac{W_s}{\text{Maximal allowed axial loading}}+\frac{W_r}{\text{Maximal allowed radial loading}}+\frac{M}{\text{Maximal allowed bending moment of working platform}}\leqslant 1$$

W_s: Actual axial loading　W_r: Actual radial loading　M: Actual loaded bending moment of working platform

5. Determination method

It could be used only when the chosen pneumatic cylinder must meet the requirements of article 2, 3 and 4 simultaneously.

Back
HRQ

Installation and application

1. Rotation Direction and Rotation Angle

1.1) Rotation Direction

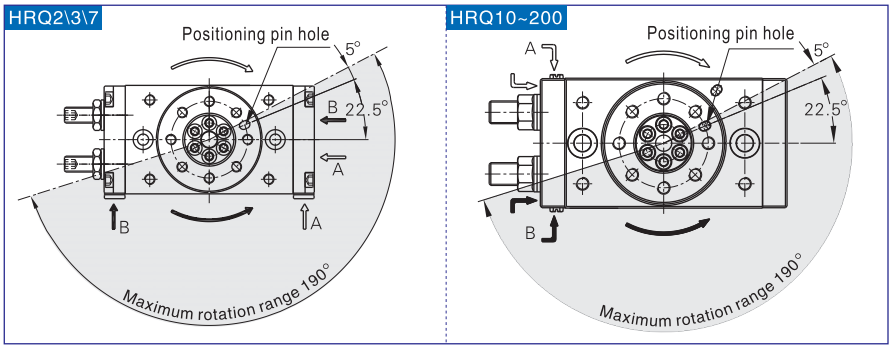

A) By adjusting the adjustment bolt, the rotation end can be set within the range shown in the up drawing: Maximum ratation is 190° ;

B) The rotary table turns in the clockwise direction when the A port is pressurized, and in the counter–clockwise direction when the B port is pressurized.

1.2) Rotation Range Example(90° Rotation)

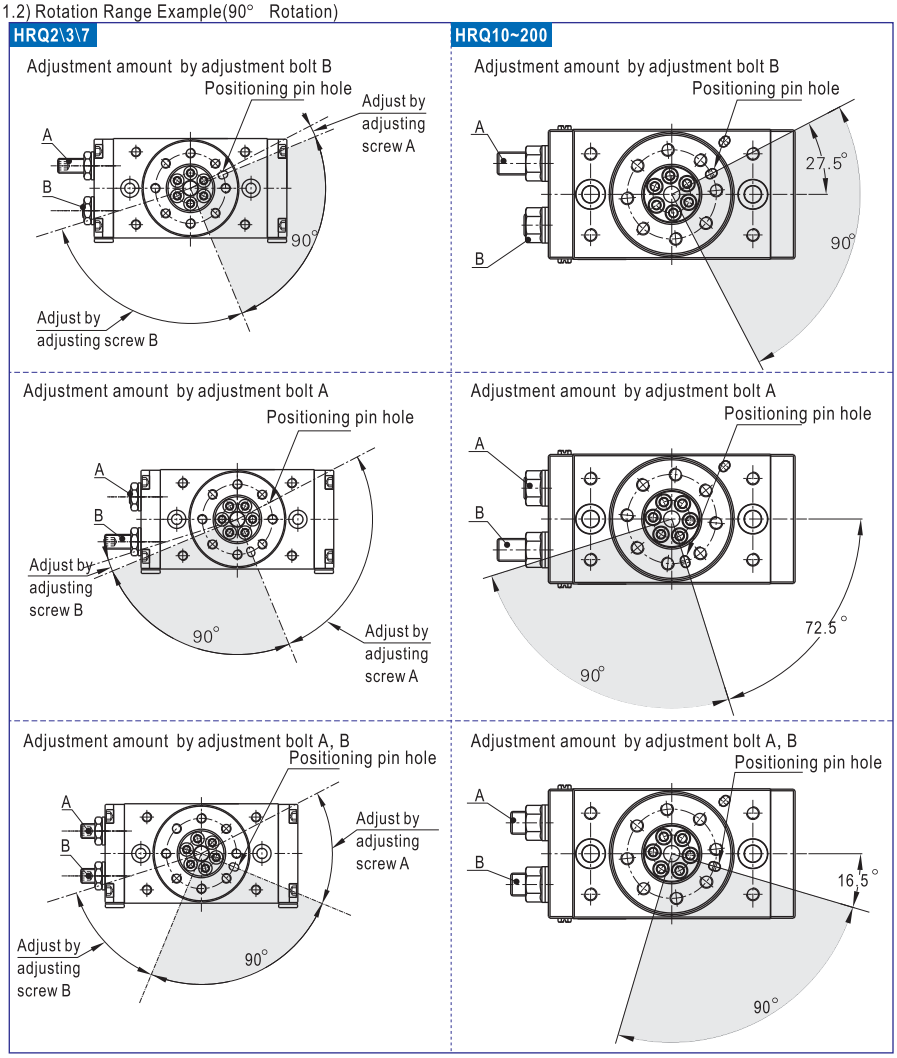

1.3) The rotation angle can also be set on a type with internal absorber.

Model	Adjustment angle per rotation of angle (adjustment screw)	Model	Adjustment angle per rotation of angle (adjustment screw or shock absorber)
HRQ2	11.5°	HRQ10	10.2°
HRQ3	10.9°	HRQ20	6.5°
HRQ7	10.2°	HRQ30	6.5°
		HRQ50	8.2°
		HRQ70	7.0°
		HRQ100	6.1°
		HRQ200	4.9°

2. The range of rotation angle has been adjusted to the maximum in the factory, please do not enlarge the rotation angle any more.
3. The movement energy should not exceed the allowed maximum energy, or the inner parts will be damaged.
4. The rotary parts need no lubrication.
5. Series HRQ is equipped with a rubber bumper or shock absorber. Therefore, perform rotation adjustment in the pressurized condition(minimum operation pressure: 0.1 Mpa or more for adjustment bolt and internal shock absorber types, and 0.2 MPa or more for external shock absorber type.)
6. Refer to the table below for tightening torques of the shock absorber setting nut.

Shock absorber size	Max. tightening torque(Nm)
M10	3.5
M12	8.0
M14	11.0
M20	24.0
M27	63.0

7. Never loosen the bottom screw of the shock absorber. (It is not an adjustment screw.) That may cause oil leakage.
8. Shock absorbers are consumable parts. When a decrease in energy absorption capacity is noticed, it must be replaced.

Rotary table cylinder	Shock absorber
HRQ10	ACA1006-A
HRQ20\HRQ30	ACA1209-A
HRQ50	ACA1412-A
HRQ70\HRQ100	ACA2020-A
HRQ200	ACA2725-A

9. Strictly control runout and parallelism of the dial according to the requirements of the following table.

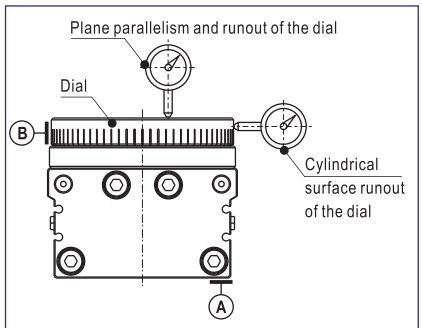

Items	Specific requirements	Relative datum
Plane parallelism of the dial	0.1	A
Plane runout of the dial	0.1	A
Cylindrical surface runout of the dial	0.1	A

Back
HRQ