ISO 9001 CERTIFIED

HP-30(T)

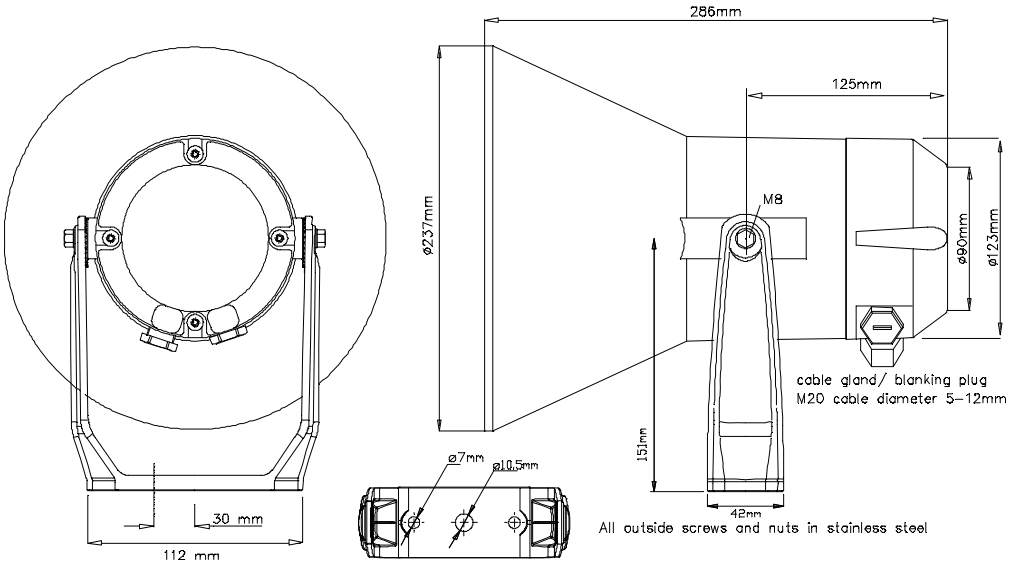

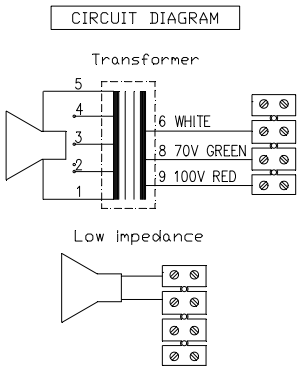

70/100 volt combined transformer Primary connections	
White : Green	70 V
White : Red	100 V
Secondary nominal tappings	
1 : 5	30 W
1 : 4	20 W
1 : 3	15 W
1 : 2	7,5 W
2 : 4	3,5 W
2 : 3	2,0 W

Sound pressure levels at 1W/1m sine wave

SPL vs Freq

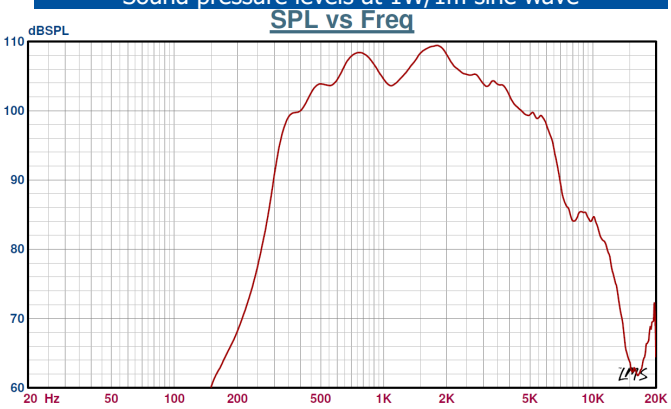

Specifications	
Material / Color	Polyamide / RAL 7035
Mounting	Bracket
Termination	Screw terminal
Weight w/transformer	2,2 kg
IP-rating	67
Max. / min. amb. temp	110°C / -50°C
Rated power	30W
SPL 1W/1m	110 dB
SPL rated power	124 dB
Effective freq. range	310 – 8000 Hz
Dispersion (-6dB) 1kHz / 4kHz	110° / 32°
Options	Impedance, colors, labels

Installation, Operation and Maintenance Procedures

- Unscrew lid (4 screws). Lead cable through cable gland and connect to screw terminal (100V or 70V).
- Select required tapping onto the transformer. Tighten cable gland to ensure IP-grade.
- Fasten lid with a torque of two Nm.
- Fasten bracket with 1-3 screws.
- To change the position of the loudspeaker, please adjust the bracket (by loosening / tightening the screws) as required.
- For optimum performance, always use the correct voltage / power and operate within the frequency limits as stated.
- Do not open loudspeaker when energized.
- This loudspeaker is supplied with two years warranty against defective materials and workmanship.

CE

DNH reserves the right to alter specifications without notice.