FRONT HUB V5

HUB CODE	WHEELS
V5	AXR, EA70, EA70 SL, EC70 SL

LOCATION	DESCRIPTION	PART #
A	END CAP V5 FRONT PAIR	8007682
B (x2)	BEARING 609 STD AM	8011338
C	AXLE V5 FRONT	8007680

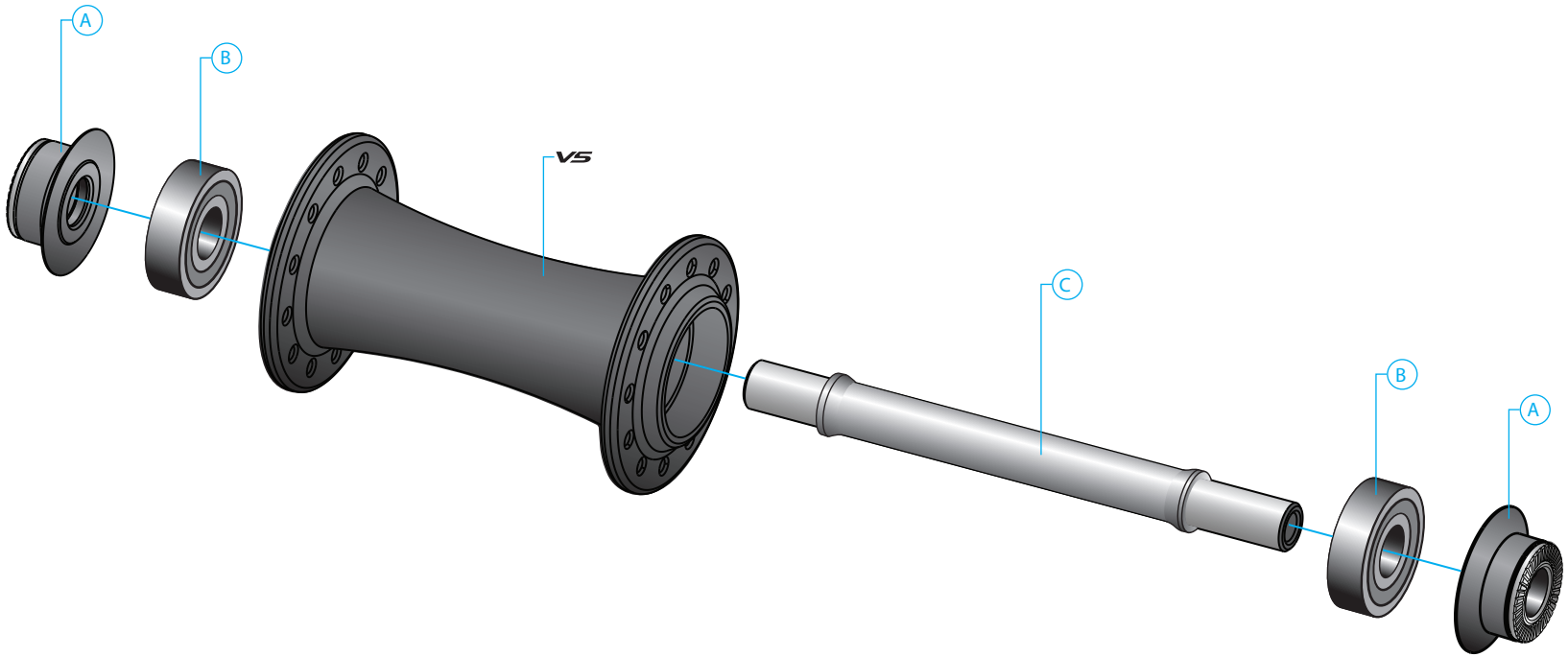

EASTON CYCLING