DC COOLING FAN

9238 92x92x38MM

General Specifications

- Material..... Frame: Plastic (UL94V-0)
  Impeller: Plastic (UL94V-0)
  Lead Wire: UL1007AWG#24 or Equivalent (+) Red, (-) Black
- Expected Life..... Ball Bearing 70,000hrs (40°C)
- Temperature Range.... Operating temperature -10°C~70°C (Non-condensing)
  Storage temperature -40°C~70°C (Non-condensing)
- Safety Standards..... Ul, TUV, RoHS, CE
- DC Fan Specials..... RD, FG, PWM, IP56

Specifications

Model	#Bearing Type	Rated Voltage	Operating Voltage	Input Current	Input Power	Speed	Max Air Flow		Max Static Pressure		Noise	Weight
Part No.	B.S	VDC	VDC	Amp	Watt	RPM	CFM	m³/min	Inch-H2O	Pa	dB-A	g
sD9238V12U	B	12	7.0~13.8	2.00	24.00	6000	125.10	3.54	0.93	231.35	63.0	245.0
sD9238V12H	B	12	7.0~13.8	1.60	19.20	5000	101.92	2.89	0.82	204.18	55.0	245.0
sD9238V12M	B	12	7.0~13.8	1.30	15.60	4000	83.31	2.36	0.61	151.89	52.0	245.0
sD9238V12L	B	12	7.0~13.8	1.10	13.20	3000	67.23	1.90	0.44	109.56	49.0	245.0
sD9238V24U	B	24	14.0~27.6	1.00	24.00	6000	125.10	3.54	0.93	231.35	63.0	245.0
sD9238V24H	B	24	14.0~27.6	0.80	19.20	5000	101.92	2.89	0.82	204.18	55.0	245.0
sD9238V24M	B	24	14.0~27.6	0.60	14.40	4000	83.31	2.36	0.61	151.89	52.0	245.0
sD9238V24L	B	24	14.0~27.6	0.50	12.00	3000	67.23	1.90	0.44	109.56	49.0	245.0
sD9238V48U	B	48	28.0~56.0	0.50	24.00	6000	125.10	3.54	0.93	231.35	63.0	245.0
sD9238V48H	B	48	28.0~56.0	0.40	19.20	5000	101.92	2.89	0.82	204.18	55.0	245.0
sD9238V48M	B	48	28.0~56.0	0.30	14.40	4000	83.31	2.36	0.61	151.89	52.0	245.0
sD9238V48L	B	48	28.0~56.0	0.25	12.00	3000	67.23	1.90	0.44	109.56	49.0	245.0

Specifications are subject to change without notice. Please visit our website at http://www.sofasco.com for update information

Dimensions (Unit:mm)

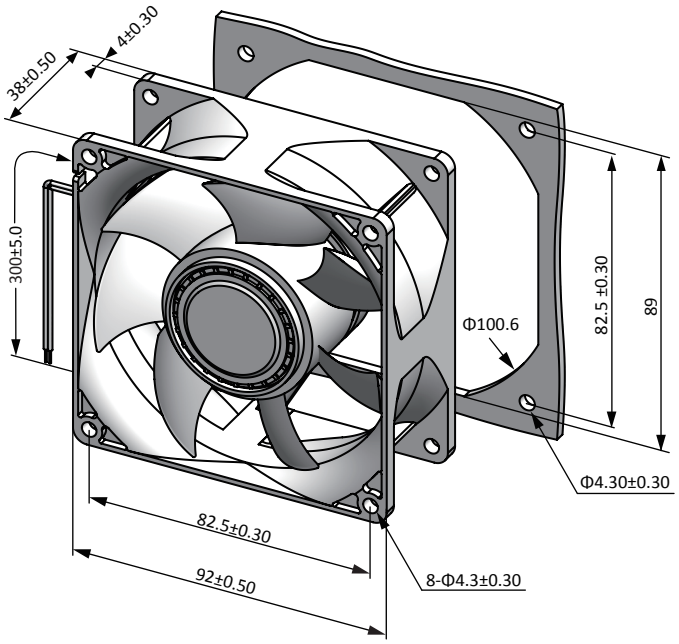
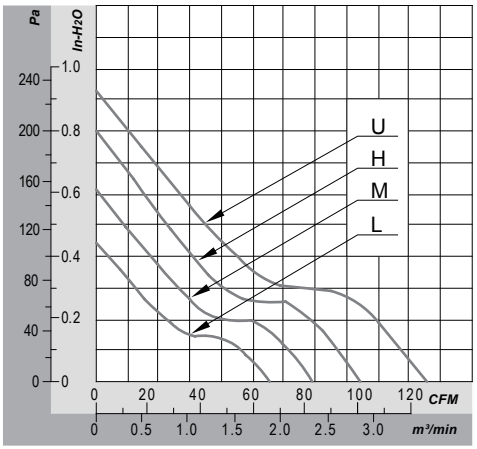
PQ Curve (At rated Voltage)