N.T.S.

RADON FAN MITIGATION KIT

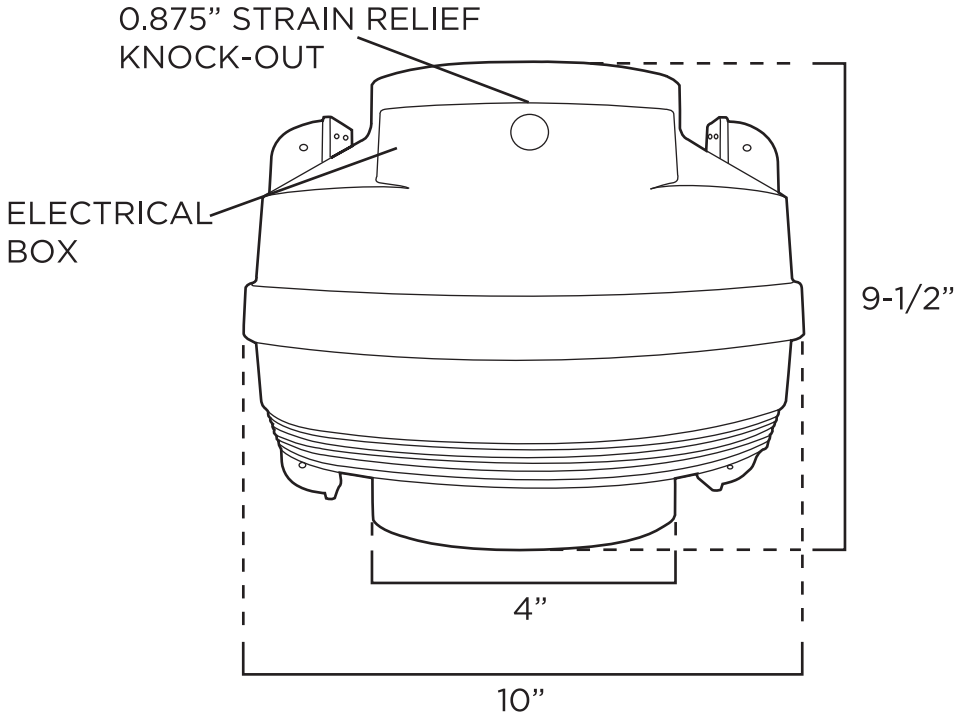

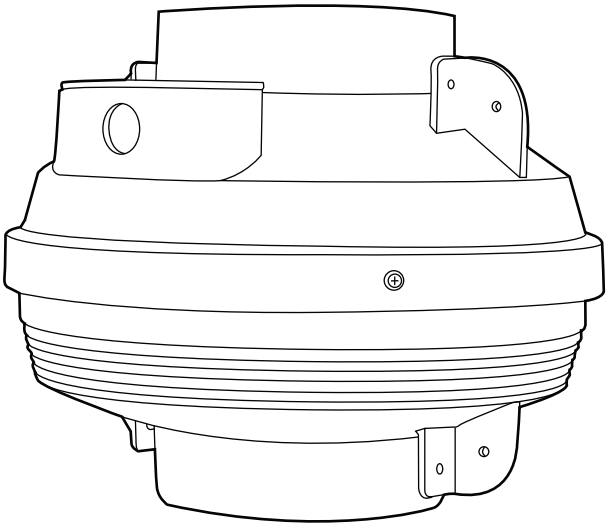

MODEL: RDK04-3

N.T.S.

RADON FAN MITIGATION KIT

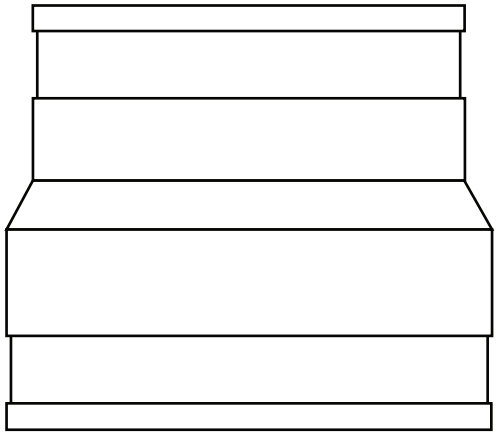

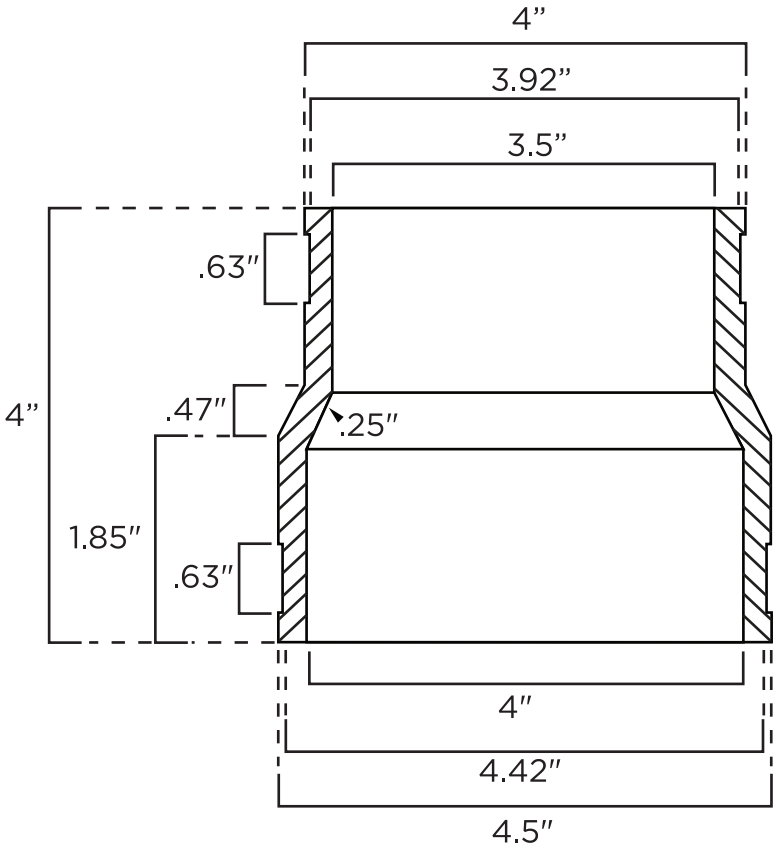

3” to 4” white couplers

MODEL: RDK04-3

SUNCOURT INC. | P.O. Box 40 | Durant, IA 52747-0040 | 1.800.999.FANS (3267) | suncourt.com

N.T.S.

RADON FAN MITIGATION KIT

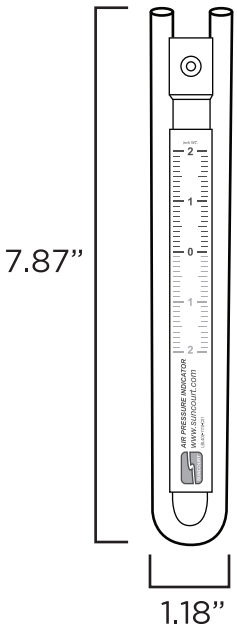

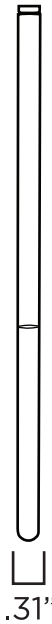

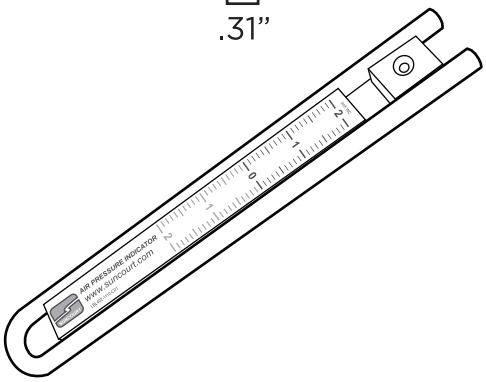

AIR PRESSURE INDICATOR

MODEL: RDK04-3

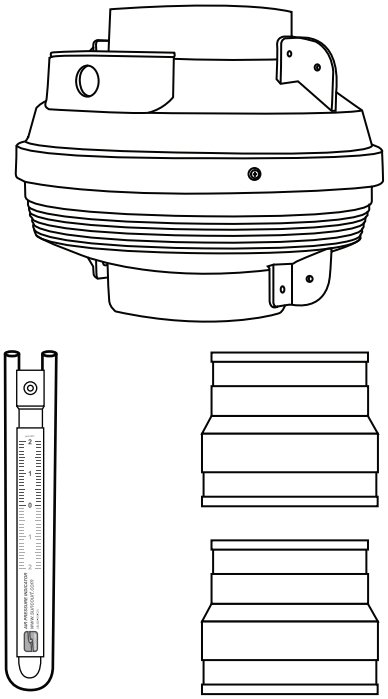

Model: RDK04-03
Includes:
1 - 4" Centrax® In-Line Centrifugal Fan
2 - 4" to 3" White Rubber Couplers
1 - Air Pressure Indicator

Class F external rotor motor

Thermally protected auto reset

Ball bearing balanced ABS backward inclined impeller

MET® Listed to UL & CSA Standards for USA & Canada

5 Year Limited Warranty

4" Inlet/Outlet Diameter /
Overall Diameter 10"

Made In USA

PERFORMANCE:

CFM	Watts	Amps	Volts	Hz	dBA	Sones	Weight
200	77	0.65	120	60	60	4	5.45lbs

HAZARDOUS MATERIAL INFO:

Not Applicable

CUSTOMS TARRIFF CLASSIFICATION:

HS Code	Country of Origin	NAFTA Preference Criterion	NAFTA Producer Index
8414519090	U.S.A		

PACKAGING METRICS:

	UPC / SCC	WIDTH (in)	HEIGHT (in)	DEPTH (in)	WEIGHT (lbs)
Unit:	066028034052	10.50	16.25	10.50	9.00
Master Case:	40066028034050	10.50	16.25	10.50	9.00