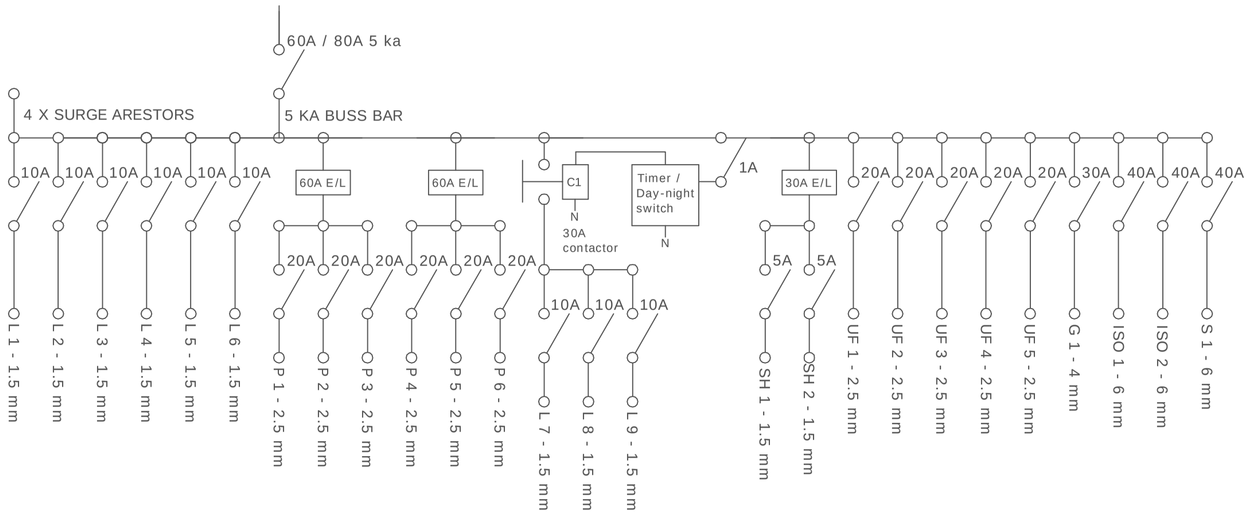

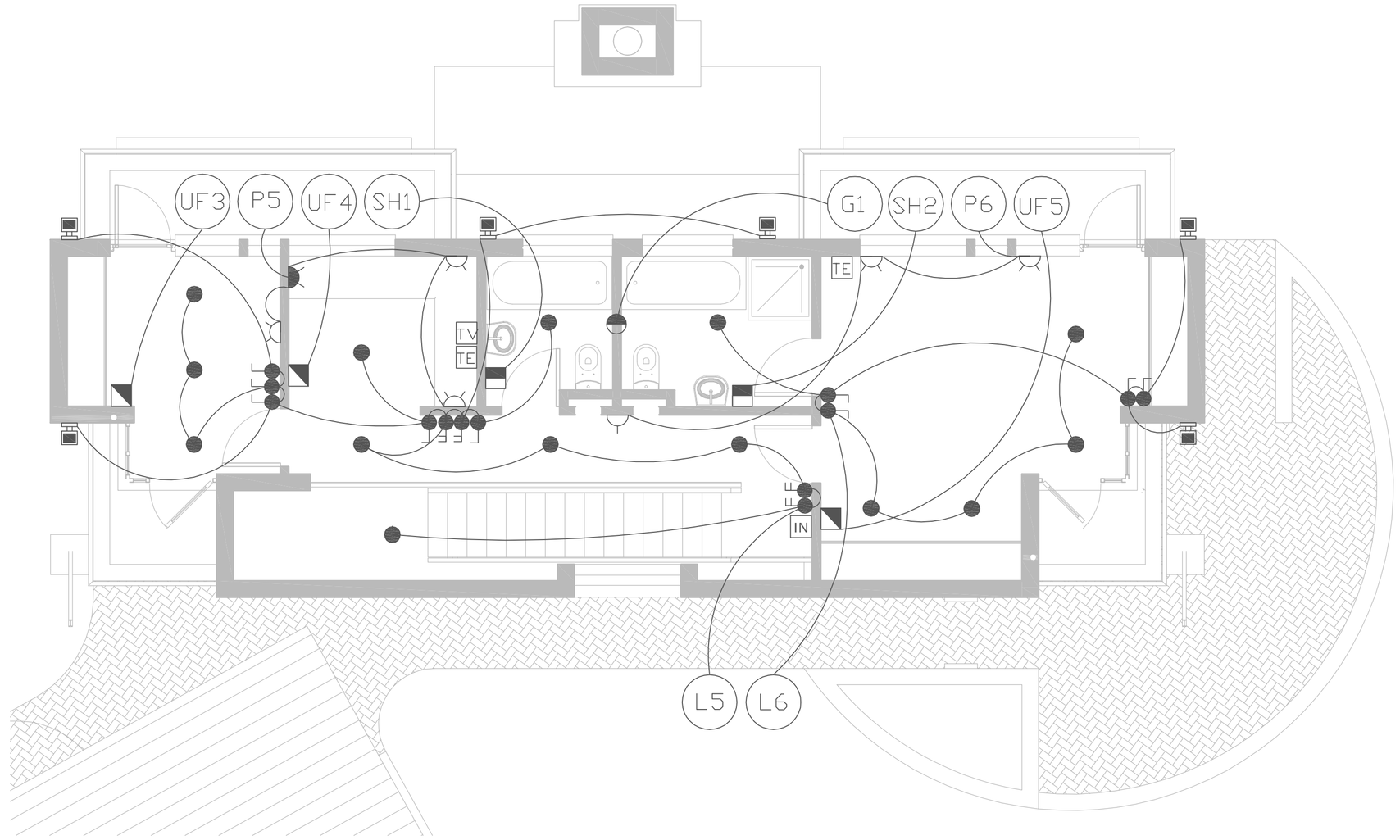

FIRST FLOOR LAYOUT ONLY NOT ON SCALE

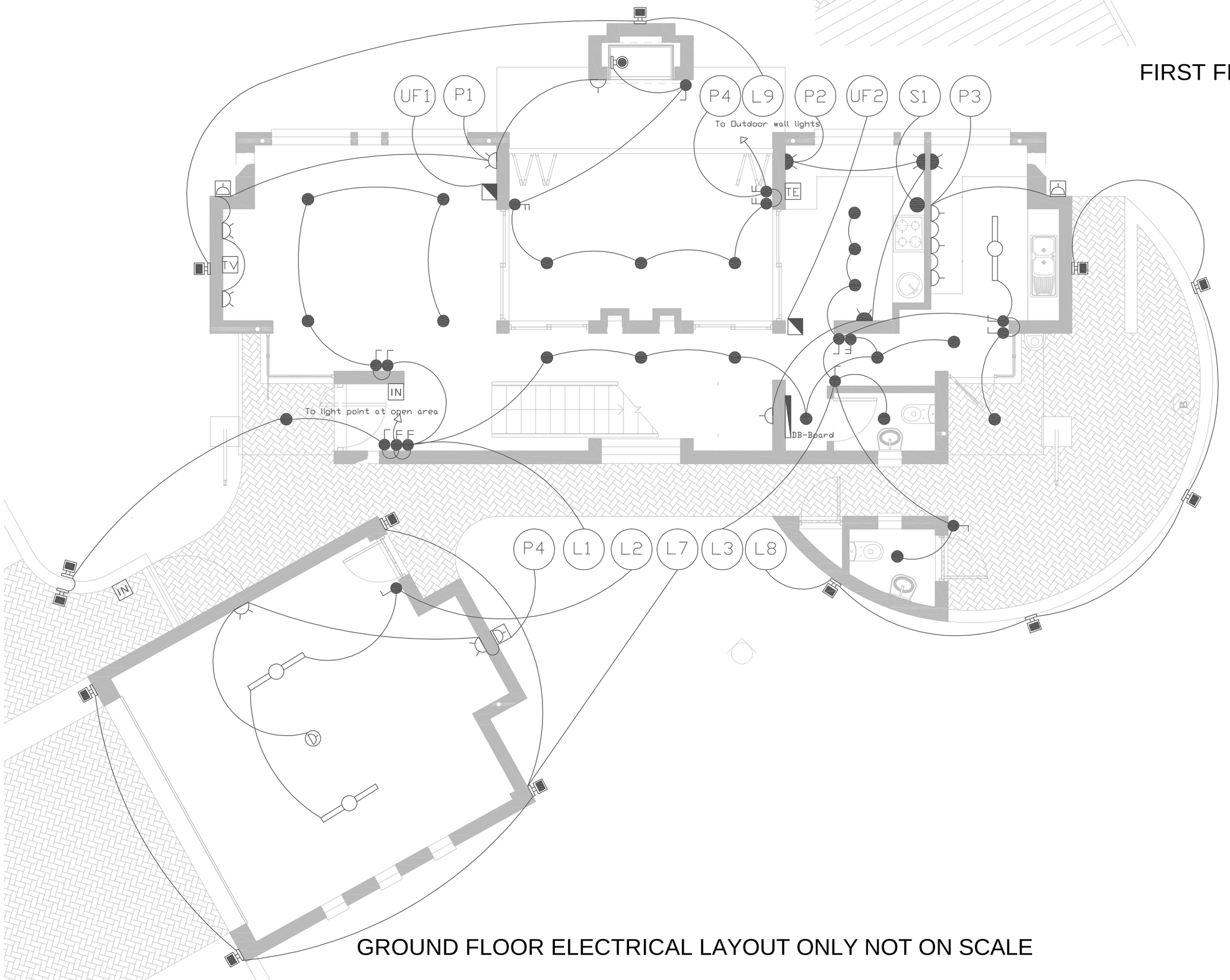

GROUND FLOOR ELECTRICAL LAYOUT ONLY NOT ON SCALE

1: The installation must be in accordance with SABS-0142
2: All the material used in the installation must be SABS approved
3: All measurements must be done on the Architect drawings
4: All wiring can be done in 20-25 mm pvc pipe or twin and earth
5: Additional earth must be done on all copper water pipes
6: Power apply cable must be 25 mm for 80 amp and 16 mm for 60 amp
7: All trenching must be at 600 mm deep for external cables
8: Power supply cable must be insulated and armoured
9: Surge arrests must be installed in main -DB
10: Power supply can be 60amp or 80amp depends what is available
11: 60 amp supply cable will be 16mm and 10mm bcew
12: 80 amp supply cable will be 25mm and 16mm bcew
13: An additional earth spike must be installed at supply point
14: All outside lighting cables- 2.5mm aluminium armored cable
15: Swimming pool supply must be armored cable
16: Swimming pool DB must be IP66
17: C.O.C must be issued to client in completion of installation
18: All wall boxes must be steel
19: All 12 volt slab boxes must be steel
20: All 12 volt transformers must not lay on ceiling
21: Stove isolator must not be installed behind stove
22: All 12 volt globes must be sealed, not open
23: All light points are only wired points
24: All light fittings will be specified and supplied by owner
25: No Air-condition points have been indicated
26: It is recommended to upgrade power supply if AC is included
27: Swimming pool heaters are also excluded
28: In the DB board a timer or a day-night can be used
29: A additional TV point must be supplied on the roof for dish
30: The light point in the barbecue must be fire proof

NOTES:

1. COPYRIGHT IS RESERVED AND THE DRAWING REMAINS THE PROPERY OF THE ARCHITECT.
2. ALL DIMENSIONS MUST BE CHECKED ON SITE AND CONTRADICTIONS MUST BE REPORTED DIRECTLY TO THE ARCHITECT. DIMENSIONS ARE NOT TO BE SCALED.
3. ALL BUILDING WORK TO COMPLY WITH NATIONAL BUILDING REGULATIONS.
4. GLAZING TO PART N - SABS 0400.
IN ACCORDANCE WITH SABS 0137:2000 CODE OF PRACTICE - THE INSTALLATION OF GLAZING IN BUILDINGS. TYPICAL SAFETY GLAZING MATERIALS ARE:
TOUGHENED GLASS AND LAMINATED SAFETY GLASS CONFORMING TO SABS1263
5. STORMWATER LAYOUT TO ENGINEERS DRAWING

DRAINAGE NOTES:

- ALL DRAINAGE WORK TO SABS 0400.
- DISHED GULLEY WITH GREASE TRAP AT ALL KITCHENS.
- IE AT ALL SP CONNECTIONS.
- CE AT ALL DIRECTION CHANGES.
- 110[PVC SEWER PIPES (SP).
- 50[PVC WASTE WATER PIPES (WWP).
- 110[PVC VENT PIPES (VP).
- ALL SP INVERT LEVELS MIN. 450mm.
- GEYSER INSTALLATIONS TO SABA 0254.
- ALL STACK PIPES TO HAVE AEACCESS FROM DUCTS ON FIRST & GROUND FLOORS

TYPICAL DETAILS:

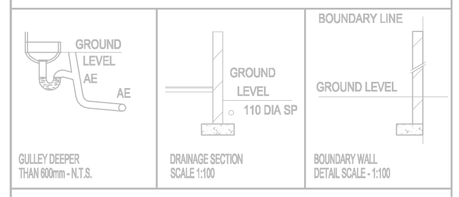

Electrical

	16 Amp Plug 300 mm affi wired with 2.5 mm gp wire and 20 Amp circuit breaker supply in 100-100 mm box
	16 Amp plug 1100 mm affi with 2.5 mm gp wire and 20 Amp circuit breaker supply in 100-100 mm box
	16 Amp double plug 300 mm affi with 2.5 mm gp wire and 20 Amp circuit breaker supply in 100-100 mm box
	16 Amp double plug 1100 mm affi with 2.5 mm gp wire and 20 Amp circuit breaker supply in 100-100 mm box
	20-30 Amp Underfloor-heater 300 mm affi with 4 mm gp wire , 20-30 Amp circuit breaker supply
	Amp Shaver plug Ip 66 1300 mm affi with 2.5 mm gp wire and 5Amp circuit breaker and E/L supply
	30 Amp Isolator with 4 mm gp wire and 30 Amp circuit breaker supply in 100-100 mm box
	60 Amp Isolator with 6 mm gp wire and 60 Amp circuit breaker supply in 100-100 mm box
	20 Amp plug circuit with 2.5 mm gp wire and 20 Amp circuit breaker supply in 20 mm pvc pipe
	Circuit indicator (P-plug nr)
	16 Amp plug water tight with 2.5 mm gp wire and 20 Amp circuit breaker supply in 100-100 mm box
	16 Amp plug in ceiling with 2.5 mm gp wire and 20 Amp circuit breaker supply in 100-100 mm box
TV	TV Point with 2 mm draw wire and 25mm pvc pipe supply in 100-100 mm box
TE	Telephone Point with 2 mm draw wire and 25mm pvc pipe supply in 100-100 mm box
IN	Intercom Point with 2 mm draw wire and 25mm pvc pipe supply in 100-100 mm box

Electrical

	10 Amp light switch 1200 mm affi with 1.5 mm gp wire and 10 Amp circuit breaker supply in 100-50 mm box
	10 Amp Two-way light switch 1200 mm affi wit 1.5 mm gp wire and 10 Amp circuit breaker supply in 100-50 mm box
	Light point installed with a slab box in concrete slabs or 60mm round box in ceiling
	Indoor wall light 2000 mm affi with 1.5 mm gp wire and 10 Amp circuit breaker supply in 60 mm round box
	Double or single 1200 mm florescent light fitting
	Light circuit indicator (L-light circuit nr)
	16 Amp Light circuit 1.5 mm gp wire and 10 Amp circuit breaker supplied in 20 m pvc pipe
	Outdoor wall light 2000mm affi

REV.NO.	DATE	DESCRIPTION

P:\Inhouseplans\Plans\Electronic Copies\Contemporary\CN209AW\DWG\CN209-AW-##B-1024B-2-885253.jpg

STYLE:
CONTEMPORARY

PROJECT:
NEW HOUSE FOR:
NAME OF REGISTERED OWNER

ON ERF
STREET
SUBURB
TOWN

DRAWING DESCRIPTION:
ELECTRICAL LAYOUT ONLY

MODEL NO. CN209-AW

DATE: NOV. 2010

DRAWING NO. 01