Commercial Tapware

Watermark AS/NZS 3718 23145

WATER RATING www.waterrating.gov.au 4.5 litres per minute (spray top) In accordance with AS/NZS 3718 License No. 1044 Stainless Pty Ltd Second outlet 4 star 7.5 litres per minute

CLEAN JET® STAINLESS STEEL

Wall Stops & Elbow Pre-Rinse Unit with Pot Filler

2 YEAR WARRANTY ONSITE

T-3M53816 – *6" pot filler*

T-3M53822 – *12" pot filler*

- Full S/S construction
- Wall elbow and lever handle wall top assemblies,
  ¼ turn ceramic disc. Stainless steel outer with brass internals to suit concealed breech
- Equipped with a water saving 6 star 4.5LPM variable trigger valve
- Available with 6" or 12" pot filler – 4 star 7.5LPM
- Fully assembled and bench tested, with a unique traceable serial number
- Working pressure range 150kPa-500kPa
- Maximum operating temperature 80 degrees

Top

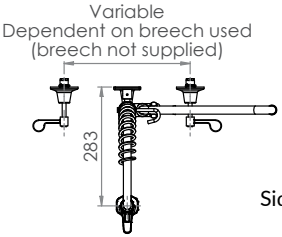

Side

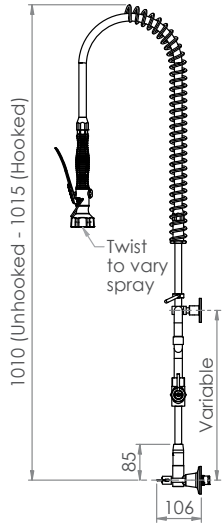
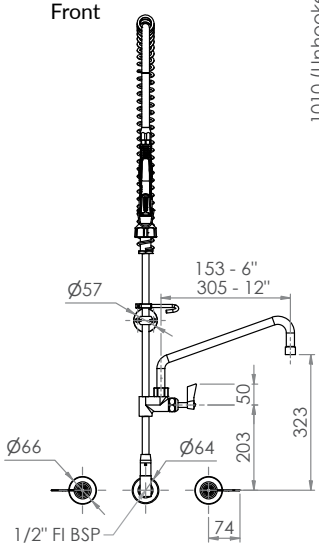
Front