Commercial Tapware

Watermark AS/NZS 3718 23145

WATER RATING 4.5 litres per minute (spray top)

100% STAINLESS STEEL LEAD FREE

CLEANJET® STAINLESS STEEL

Dual Bench Mount Pre-Rinse Unit with Pot Filler

2 YEAR WARRANTY ONSITE

T-3M53015 – *6" pot filler*

T-3M53058 – *12" pot filler*
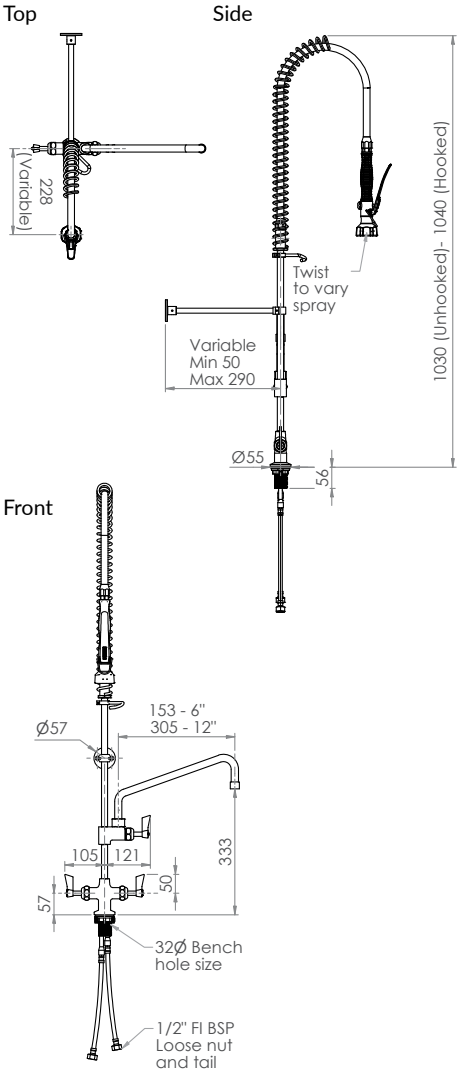
- Full S/S construction
- Equipped with a water saving 6 star 4.5LPM variable trigger valve
- Available with 6" or 12" pot filler – 4 star 7.5LPM
- Fully assembled and bench tested, with a unique traceable serial number
- Working pressure range 150kPa-500kPa
- Maximum operating temperature 80 degrees