BANZAI

1/10 SCALE 4WD READY-TO-RUN BRUSHED ELECTRIC MOTOR POWERED DRIFT STREET CAR

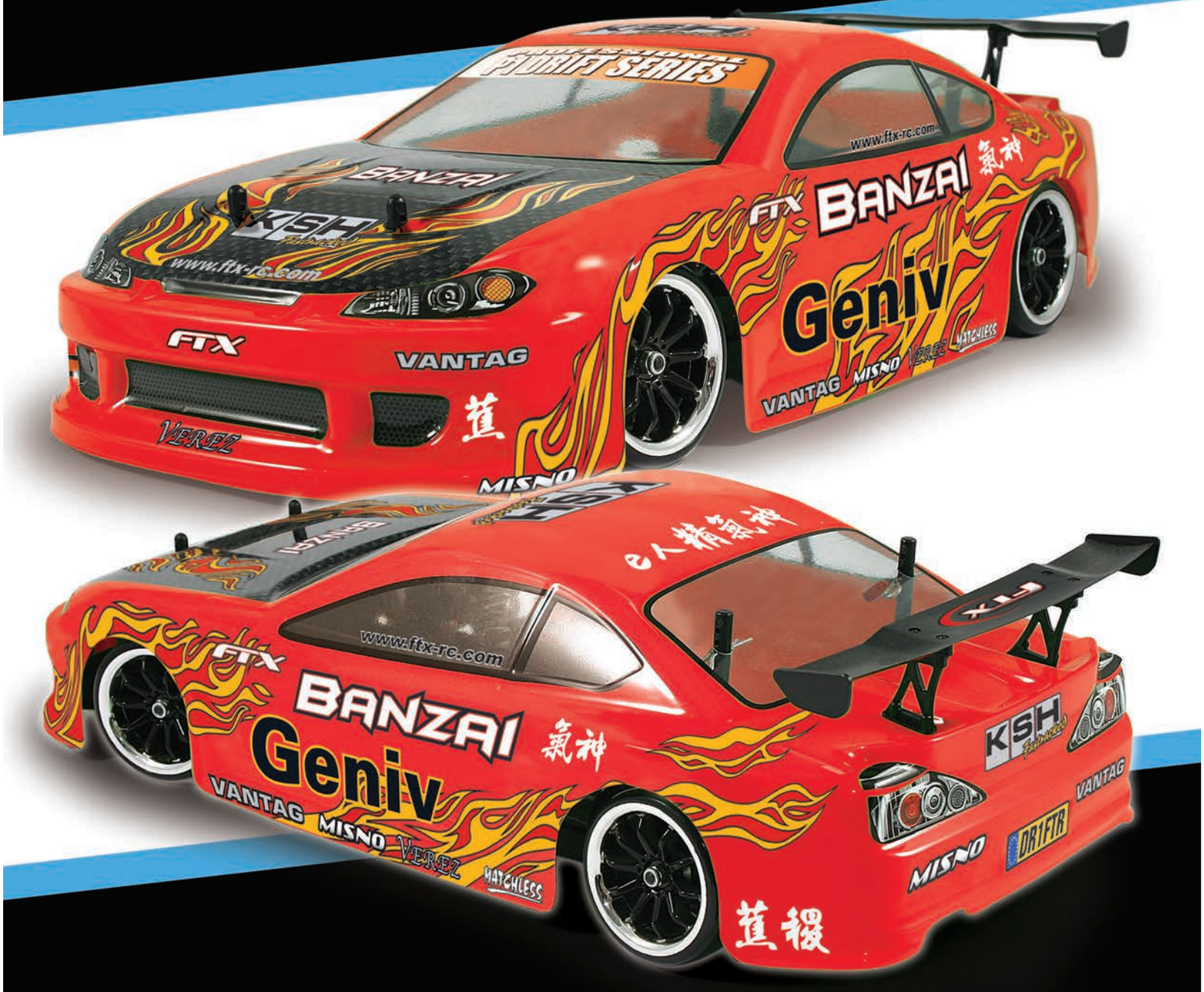

SET-UP INSTRUCTIONS AND PARTS LISTING

www.ftx-rc.com

FTX Banzai RTR Brushed 2.4GHz 4WD Drift Car

Congratulations on your purchase of the FTX 'Banzai' electric Drift car.

This 1/10th scale model has been factory assembled and all electrics installed and set up to make it the easiest possible introduction to the sport of driving RC cars.

WARNING: Read the ENTIRE instruction manual to become familiar with the features of the product before operating. Failure to operate the product correctly can result in damage to the product, personal property and cause serious injury.
This is NOT a toy and must be operated with caution and common sense. Failure to operate this product in a safe and responsible manner could result in damage, injury or damage to other property.
This product is not intended for use by children without direct adult supervision.
It is essential to read and follow all the instructions and warnings in the manual, prior to assembly, set-up or use, in order to operate correctly and avoid damage or serious injury.

Safety Precautions and Warnings

- You are responsible for operating this model such that it does not endanger yourself and others, or result in damage to the product or the property of others.
- This model is controlled by a radio which is possibly subject to interference which can cause momentary loss of control so it is advisable to always keep a safe distance to avoid collisions or injury.
- Age Recommendation: 14 years or over. This is not a toy. This product is not intended for use by children without direct adult supervision.

Carefully follow these directions and warnings, plus those of any additional equipment associated with the use of this model, chargers, ESC and motors, radio etc.

- Never operate your model with low transmitter batteries.
- Always operate your model in an open area away from cars, traffic or people.
- Never operate the model in the street or in populated areas.
- Always keep the vehicle in direct line of sight, you cannot control what you cannot see!
- Keep all chemicals, small parts and anything electrical out of the reach of children.
- Avoid water exposure, moisture causes damage to electronics and may result in the loss of control or permanent damage.
- Avoid injury from high speed rotating parts, gears and axles etc.
- Novices should seek advice from more experienced people to operate the model correctly and meet its performance potential.
- Exercise caution when using tools and sharp instruments.
- Do not put fingers or any objects inside rotating and moving parts.
- Take care when carrying out repairs or maintenance as some parts may be sharp.
- Do NOT touch equipment such as the motor, electronic speed control and battery, immediately after using your model because they can generate high temperatures.
- Always turn on your transmitter before you turn on the receiver in the car. Always turn off the receiver before turning your transmitter off.
- Keep the wheels of the model off the ground, and keep your hands away from the wheels when checking the operation of the radio equipment.
- Prolong motor life by preventing overheat conditions. Undue motor wear can result from frequent turns, rapid change of direction forwards/backwards, continuous stop/starts, pushing/pulling objects, driving in deep sand and tall grass, or driving continuously up hill.

Contents:

Banzai 1/10th RTR Electric Drift car.
Transmitter: 2.4GHz Steerwheel.
Charger: Input Mains 240V AC. Output 300mA DC
Battery: 7.2V 1800mAh NiMH
Aerial Tube

Required equipment for operation

1. Tools required for building and maintenance:

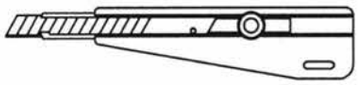

● Hobby knife

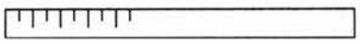

● Precision ruler

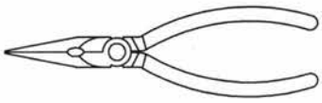

● Needle nose pliers

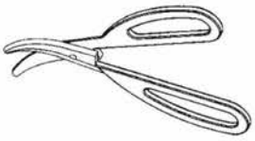

● Lexan scissors

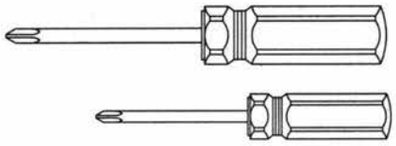

● Flat and Philips screwdriver

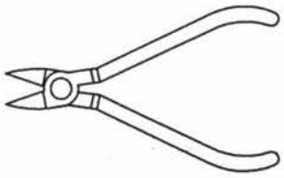

● Wire cutters

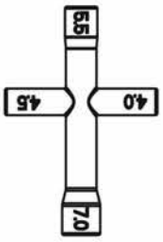

● Cross wrench

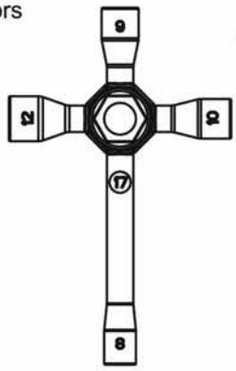

● Cross wrench

● CA glue&rubber cement

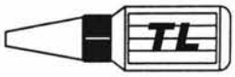

● Thread locking compound

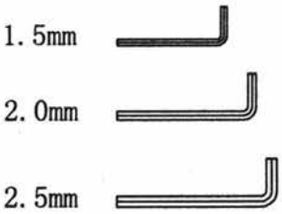

● Hex wrench

WARNING!

Do not use a power screw driver to install screws into nylon or plastic materials.The fast locking may heat up the screws being installed that may break the molded parts or strip the threads during installation.

2.Additional items needed for operation:

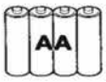

4pcs AA alkaline batteries
for transmitter

IMPORTANT!

Check that all screws and nuts are tight before each use.

Aerial Assembly.

Uncoil the aerial wire carefully so as not to kink or knot it in anyway, and first be sure to insert the wire up through the top chassis aerial mount hole from below. Pull the rubber tube cap off the aerial tube and push the wire all the way through the aerial tube until the first 5mm of wire shows out of the other end. Fold the wire down over the end of the tube and be sure to insert the rubber tube cap so that it traps the protruding wire to hold it firmly in the tube. Push Aerial tube into mounting hole in upper chassis until firmly seated. Bundle any excess aerial wire neatly away from rotating components on the chassis.

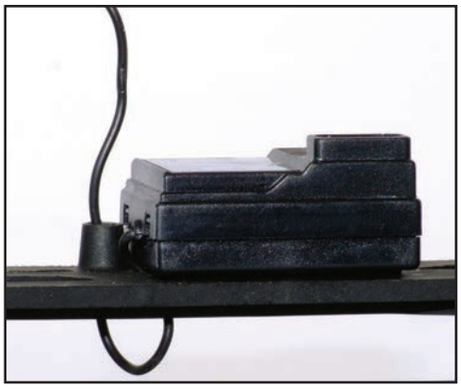

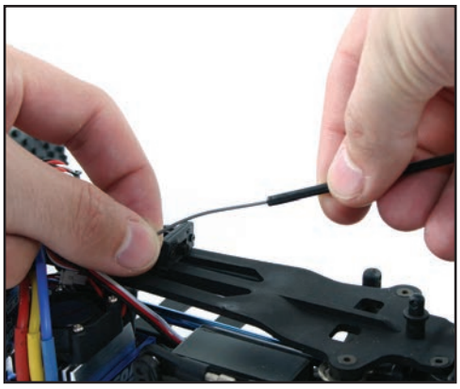

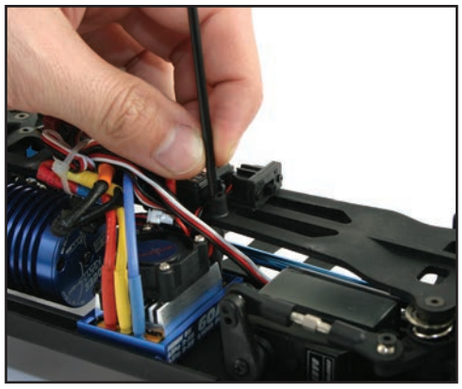

Charging/Installing the Battery.

Always store your model with the battery pack unplugged and removed. Always charge your battery away from the vehicle. The included 300mAh mains charger will take approx 6 hours to charge a fully discharged battery, but always remove it from the charger if it becomes warm to the touch. Always disconnect the charger from the mains supply and the battery pack when not in use. Keep children away from charger and battery during the charging process.

To install a charged battery, remove the body clips and remove the bodyshell. Remove the battery retainer clips, insert battery and reinstall retainer with the flat side facing the battery and re-insert clips. When connecting battery and turning car on, ensure it is off the ground, with wheels away from objects.

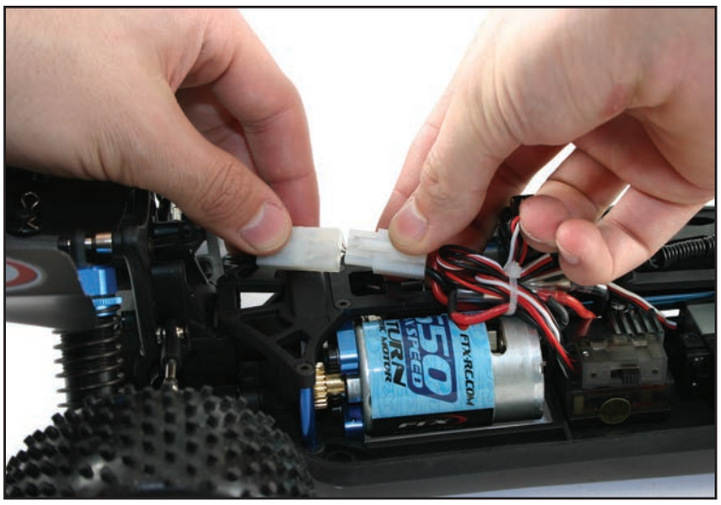

Notes on Battery use:

Always allow the battery cool after use, before recharging.
Always inspect the battery before charging.
Any bare wires, split heat shrink or leakage is a sure sign of abuse.
Never attempt to charge dead or damaged batteries.
Do not disassemble the battery or cut the connector wires.
If the battery connector gets hot enough to melt there is most likely a serious problem with your model, driveline, battery wires or speed controller. Find and correct the problem before installing another charged battery pack.
NEVER charge the battery unattended incase of overcharging, you need to be able to monitor the battery during charging
Charge away from flammable objects and on a non-flammable surface incase the battery becomes too hot.

Speed Control Set Up

FEATURES:

This ESC is set up in a simple way for easy operation. When switched on, it automatically searches the neutral point. When the automatic setup is finished, the motor sends out "DO" "RE" "MI" music indicating it snatches the neutral point. It's easy to operate.

SPECIFICATIONS:

- ▲ INPUT: 7.2v 6-cell NiMH DC (not LiPO compatible)
- ▲ BEC:5V 1A
- ▲ Current Drain: 20A, Max Forward 300A (instantanteous), Max Reverse 150A (instantanteous)
- ▲ Size: 35mm(L) X 33mm(W) X 30mm(H) Weight: 48.2g
- ▲ Applicable: 540/15T motor and above.

Wire diagram:

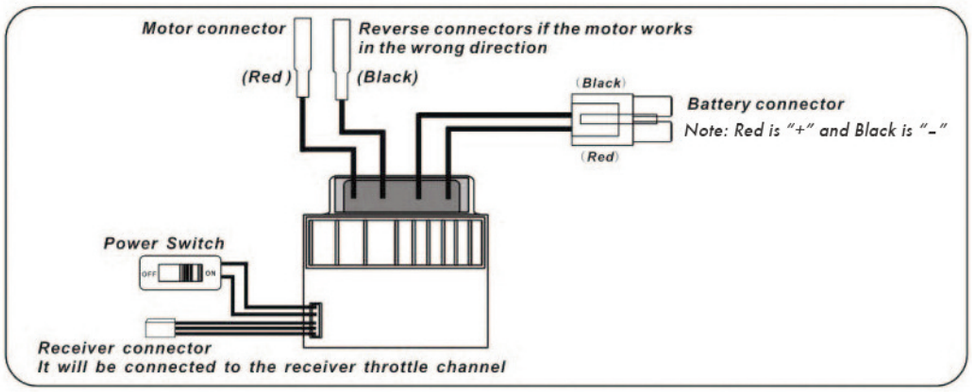

SETUP:

Connect all wires according to the diagram, then switch on the radio. (Put to default setting for Programmable Radio). Switch on the power of the ESC, and you'll hear "DO, RE, MI" music. The music indicates that the transmission is on, and the neutral point is set up. If the motor does not stop running a short while after the neutral point is set, please switch off the ESC and then switch it on again to get the neutral point.

FUNCTIONS:

- ▲ Forward: Press the trigger and the car will move forward. If the car is moving a little then adjust the trim (No.8 on Transmitter picture).
- ▲ Brake: To brake allow the trigger to return to neutral point
- ▲ Reverse: Push the trigger forward and the car will go into reverse. The car mustbe stationary before reverse engages. This protects the esc from exessive forward/backwards action.
- ▲ LED indicator is always on during forward, reverse and brake mode. When the ESC is not working and the car stops, LED indicator is off. When the radio is switched off, LED indicator on the ESC flashes.

Warning:

- ▲ Although this esc is waterproof the rest of the vehicle is not. Do not run the model in excesssively wet conditions or submerge as long term damage and wear can occur.
- ▲ It is dangerous to touch the motor after running as it emits heat during running and the cooling plate remains hot after running.
- ▲ This ESC is not LiPO battery compatible. Use with Lipo will damage the ESC permanently

2.4GHz Transmitter Set-Up

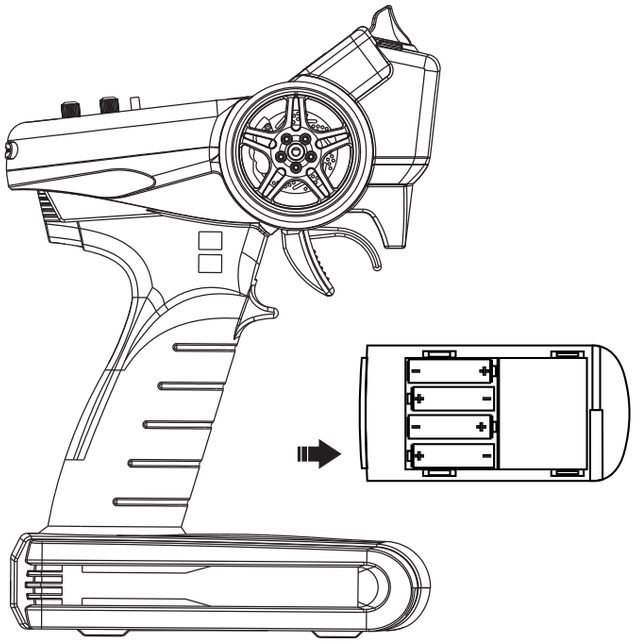

Install the batteries

(1) Remove the battery compartment cover.
(2) Replace the used batteries with new AA size batteries.

Please replace batteries when the power indicator blinks or the buzzer beeps.

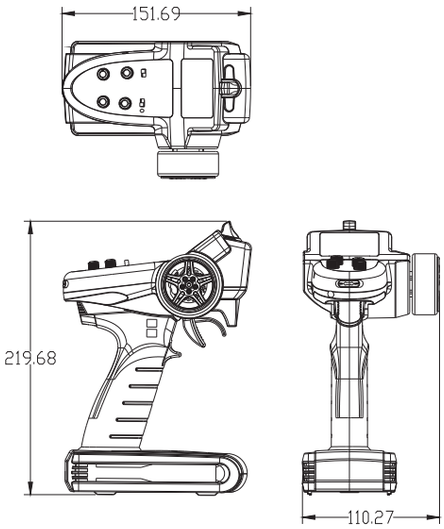

Function

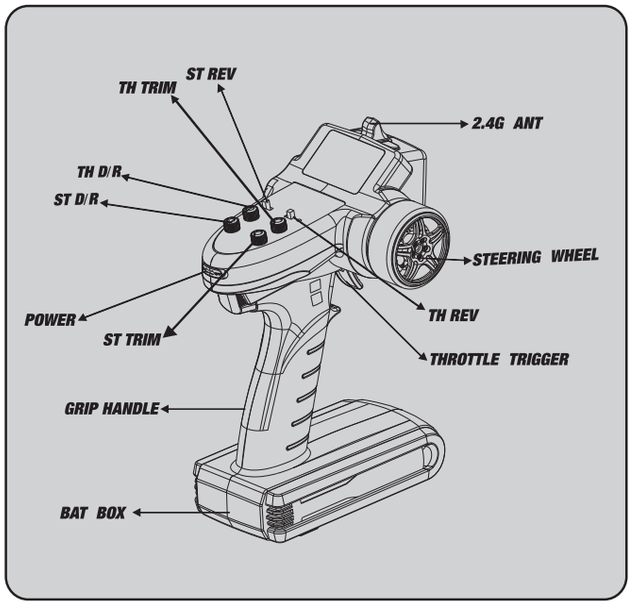

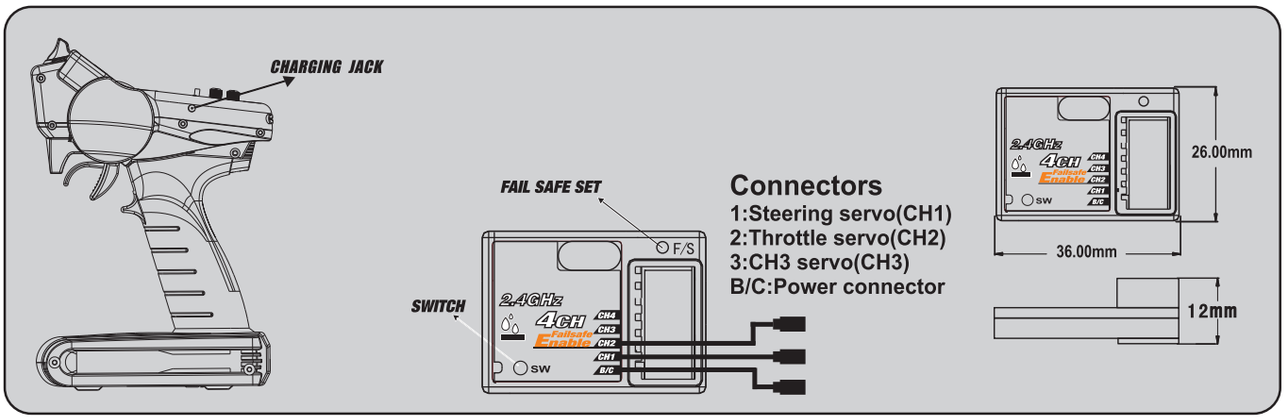

2.4GHz Transmitter Adjustment

A. Throttle Trigger

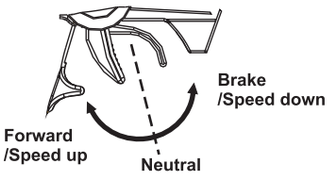

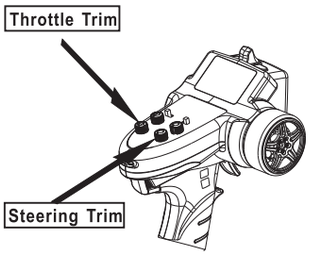

Keep the transmitter and receiver 40cm apart when operating.

Use the REV switches to reverse the steering or throttle operating direction.

1. Push the trigger forward to slow down or brake.
2. Pull the trigger backward to accelerate.

B. Steering Wheel

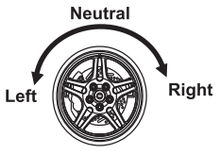

Throttle Trim: Trim the throttle servo slightly when the trigger is at the neutral position.

Steering Trim: If the front wheels do not align straight, use the steering trim to adjust.

Fail Safe Function Setting

1. Set the TH, ST switches to the normal position.
2. Turn on the transmitter and receiver.
3. Press the F/S SET button, the LED on the receiver should start flashing rapidly.
4. Put the throttle trigger at the brake position, press the F/S SET button, the LED should become solid.
5. For electric model, put the throttle trigger at the stop position when you are making the setting.

Low battery alarm

Do not operate the radio system when the battery power is low. the battery power is low.

Electrical powered model

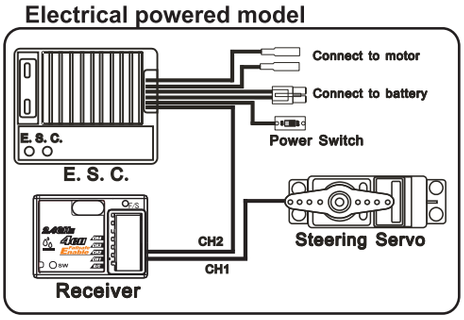

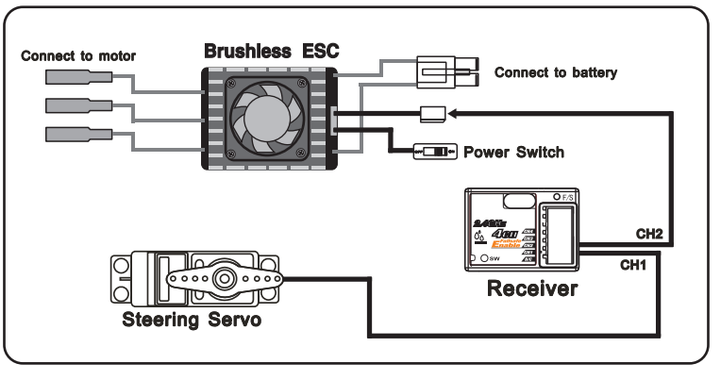

Binding the transmitter and receiver

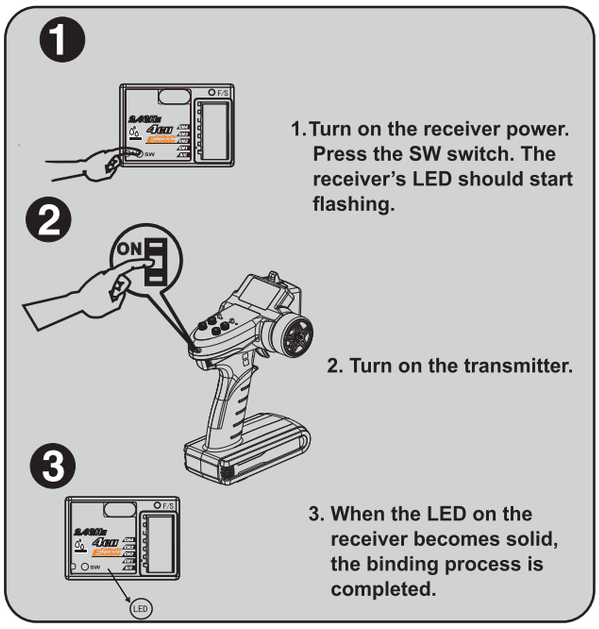

1. Turn on the receiver power. Press the SW switch. The receiver's LED should start flashing.
2. Turn on the transmitter.
3. When the LED on the receiver becomes solid, the binding process is completed.

Getting Started

Switch on transmitter.
Hold vehicle clear of the ground, connect battery pack and switch on receiver.
Bind the Transmitter and receiver if required.
Test the transmitter to check control of the vehicle with wheels off the ground.
Start driving slowly and if the vehicle does not go straight, adjust steering trim dial on Transmitter.
For the very first run use the throttle gently, to gradually bed in the motor brushes and help the driver become accustomed to the vehicles behaviour and controls.

PLEASE NOTE:
Although the electronics are waterproof the rest of car can be subjected to damage if running in excessively wet or submerged conditions.

After Run.

Switch off the receiver power, switch off the transmitter and lower the aerial. Disconnect the battery and remove it from the vehicle, allow it to cool before recharging. If you have a second charged battery all ready to use, still allow the vehicle to cool slightly before continuing.

Regular maintenance.

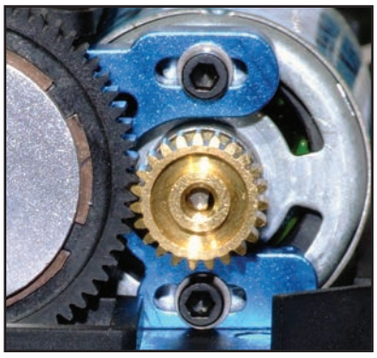

Frequently check the whole vehicle for loose or missing fixings. Use thread lock on any replacement screws into metal threads.

Frequently check rotating parts are free from grass, string etc. that might bind their motion and over stress the motor or speed controller. Remove the wheels occasionally and check behind the mounting hex for obstructions or anything that might have been wrapped around the axle and caused extra drag.

Check the gear mesh frequently and remove any stones or grit from gear teeth to prevent premature wear and damage.
If the motor moves, or is removed for maintenance/exchange, the gear mesh will need to be set. Simply slacken the motor retaining screws and adjust the motor until there is just discernable backlash between pinion and spur teeth. If the gear is too tight or too loose the gears will be noisy and could be damaged.

Shock absorbers will wear prematurely if used in dirty dusty conditions. Replace oil and seals as required to keep a smooth dampening action.

Trouble shooting guide.

Short Runtime:	Sluggish Action:	Motor/ESC overheat:	Motor spins but vehicle refuses to move:	Poor Range or fails to operate:
Battery damaged/not charged Motor dirty or brushes worn Drivetrain binding	Motor dirty or brushes worn Bind in drive train Battery running low on power	Over-geared Binding transmission. Seized axle bearing. Motor binding	Gears damaged. Gears loose on shaft. Slipper clutch too loose. Drive shaft broken or missing.	Transmitter batteries low Vehicle Battery Low. Transmitter switched off Transmitter/receiver aerial not extended. ESC switched off or battery not connected. Loose connectors/wires. Water damage. Model electronics are not waterproof.

Warranty

Due to the nature of this product and potential use FTX warrants it to be free of material and workmanship defects when new. FTX will at its sole discretion repair or replace defective components free of charge within 30 days from date of purchase. This warranty does not cover wear and tear, crash or impact damage, modifications, component water damage failure to perform maintenance or damage from improper use. Proof of purchase date will be required to action any warranty claims.

Instructions for disposal.

This product must not be disposed of with other waste. Instead, it is the user's responsibility to dispose of their waste equipment by handing it over to a designated collections point for the recycling of waste electrical and electronic equipment.
For more information about where you can drop off your waste equipment for recycling, please contact your local council, your household waste disposal service or where you purchased the product.

FRONT & REAR SHOCK ASSEMBLY

Front Shocks

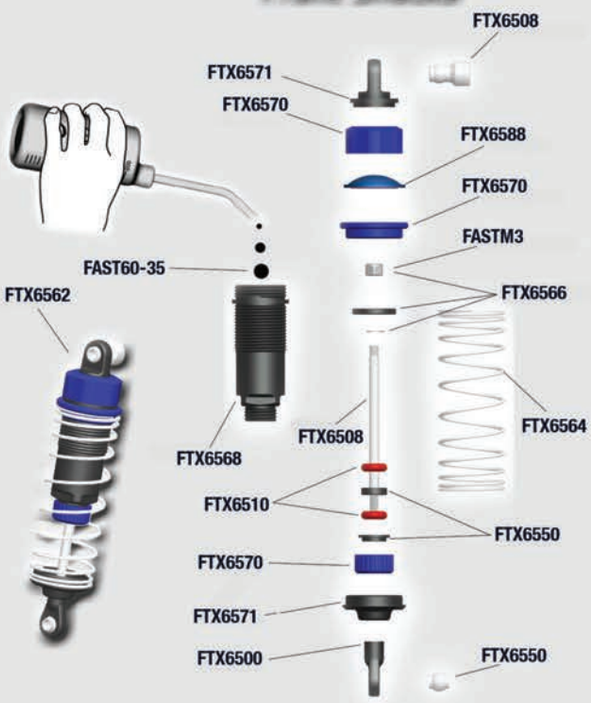

(Dia.3-1)

Rear Shocks

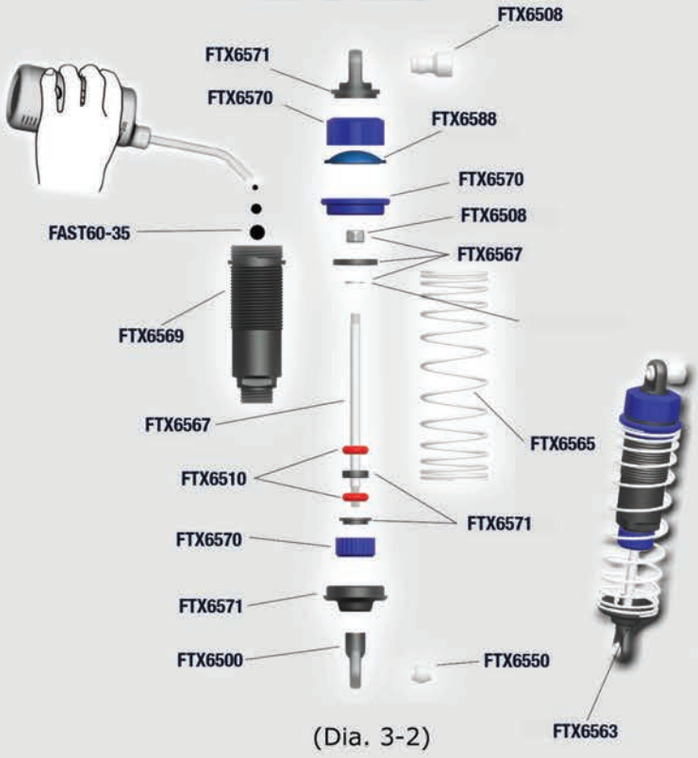

(Dia. 3-2)

Steering Servo

(Dia.3-3)

Tyres

(Dia. 3-4)

Below you will see fitting instructions for the OPTIONAL front and rear anti-roll bars that are available for your drift or touring car.
Part number: FTX6487

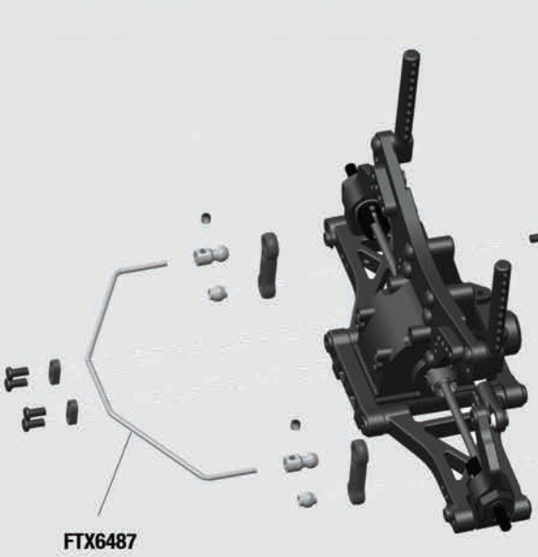

(Dia. 8-2)

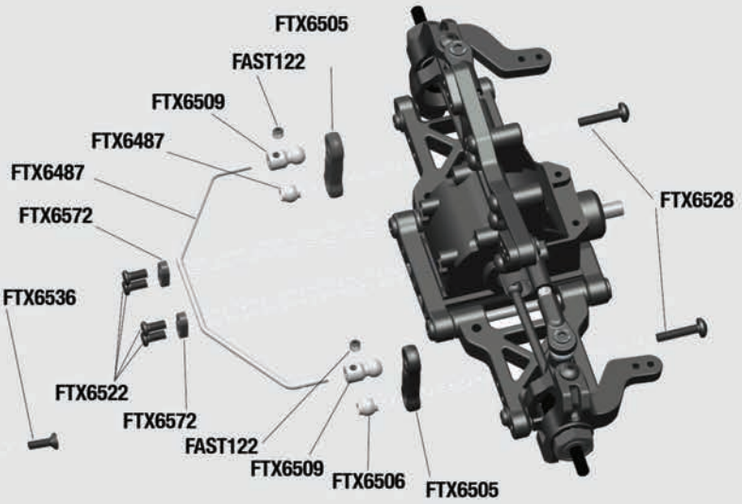

(Dia. 8-1)

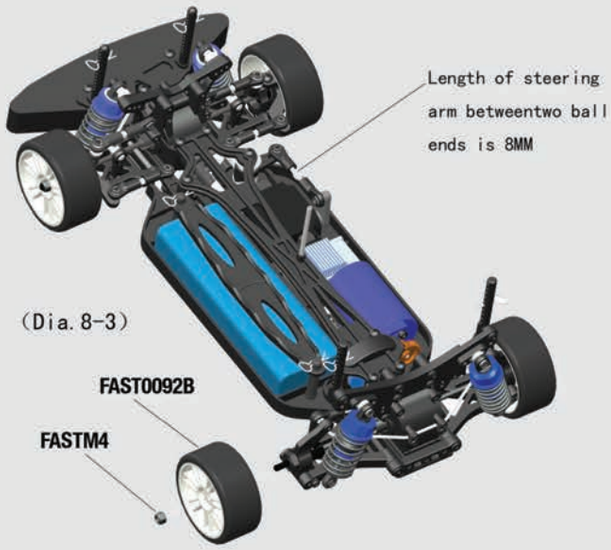

(Dia. 8-3)

Front Bumper Assemblies.

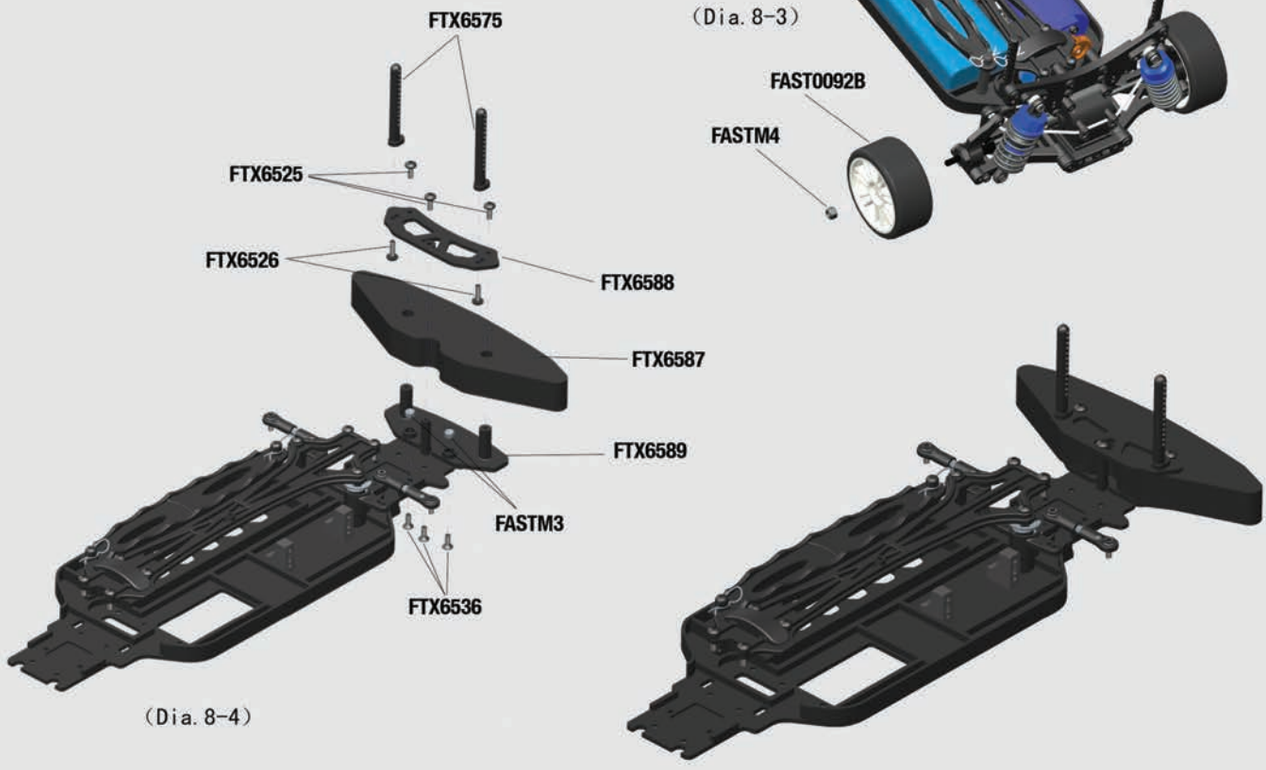

(Dia. 8-4)

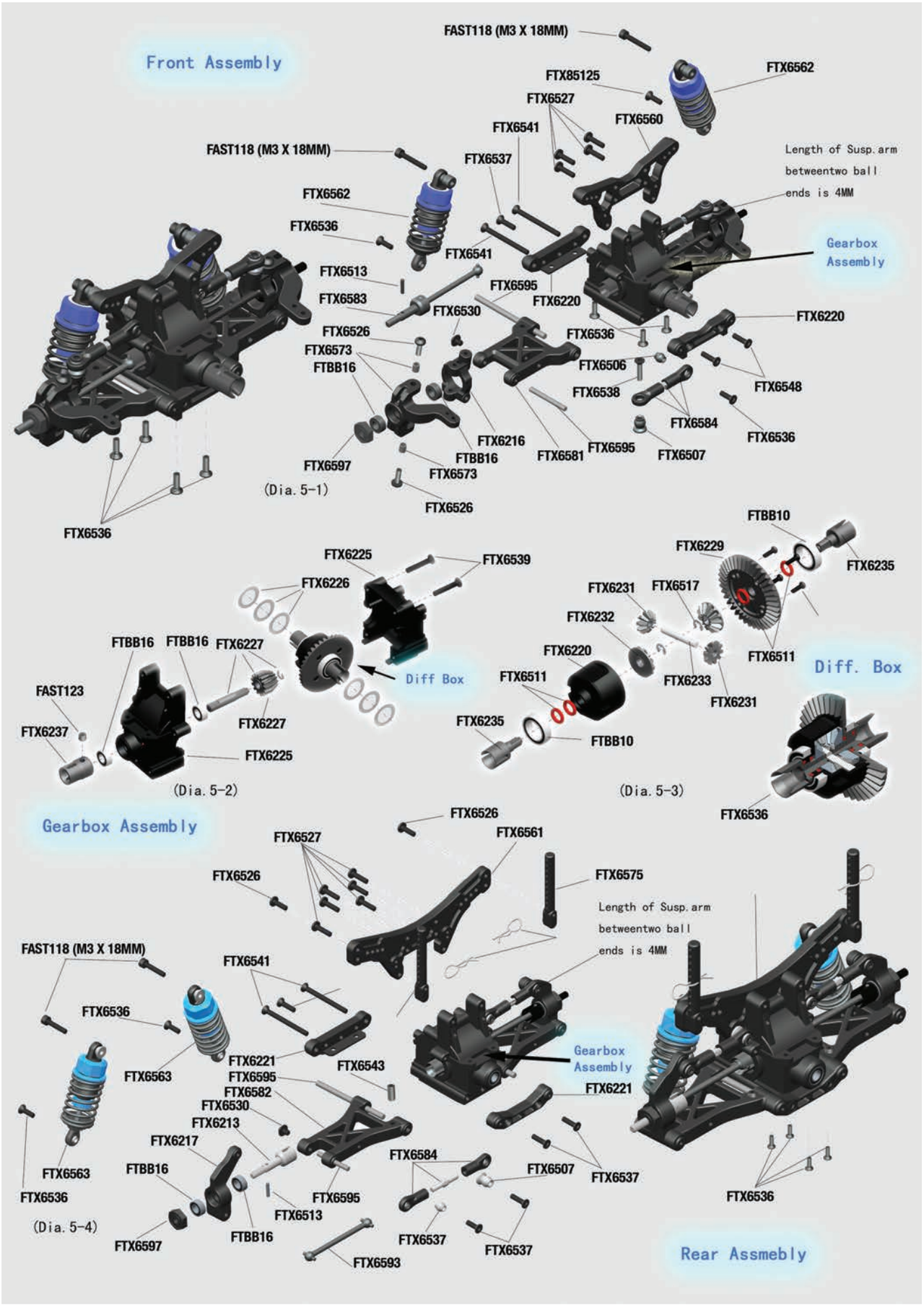
Front Assembly
FAST118 (M3 X 18MM)
FTX85125
FTX6562
FTX6527
FTX6560
FTX6541
FAST118 (M3 X 18MM)
FTX6537
Length of Susp.arm
betweentwo ball
ends is 4MM
FTX6562
FTX6536
FTX6541
Gearbox
Assembly
FTX6513
FTX6595
FTX6583
FTX6220
FTX6530
FTX6220
FTX6526
FTX6536
FTX6573
FTX6506
FTBB16
FTX6538
FTX6548
FTX6584
FTX6216
FTX6536
FTX6581
FTX6595
FTX6507
FTBB16
FTX6597
FTX6573
(Dia. 5-1)
FTX6526
FTX6536
FTBB10
FTX6229
FTX6235
FTX6225
FTX6539
FTX6226
FTX6231
FTX6517
FTX6232
FTBB16
FTBB16
FTX6227
FTX6220
FTX6511
Diff Box
FTX6511
FTX6233
Diff. Box
FAST123
FTX6231
FTX6227
FTX6237
FTX6235
FTBB10
FTX6225
(Dia. 5-2)
(Dia. 5-3)
FTX6536
Gearbox Assembly
FTX6526
FTX6561
FTX6527
FTX6575
FTX6526
Length of Susp.arm
betweentwo ball
ends is 4MM
FAST118 (M3 X 18MM)
FTX6541
FTX6536
FTX6221
FTX6543
Gearbox
Assembly
FTX6563
FTX6595
FTX6582
FTX6221
FTX6530
FTX6213
FTX6217
FTX6584
FTX6563
FTBB16
FTX6507
FTX6537
FTX6536
FTX6595
FTX6536
FTX6513
(Dia. 5-4)
FTX6597
FTBB16
FTX6537
FTX6537
FTX6593
Rear Assmebly

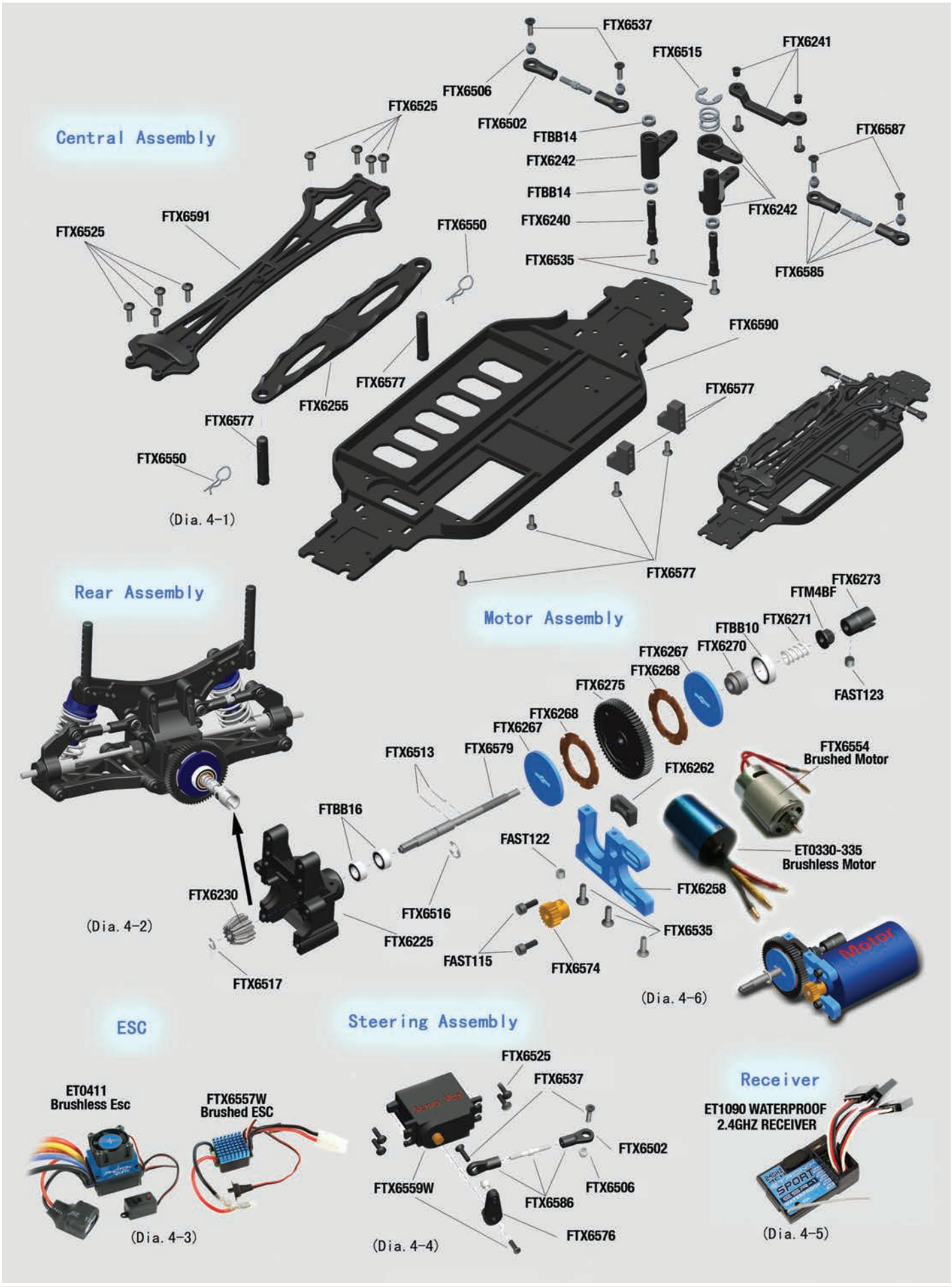
Central Assembly
FTX6537
FTX6515
FTX6241
FTX6506
FTX6525
FTX6502
FTBB14
FTX6587
FTX6242
FTBB14
FTX6242
FTX6591
FTX6525
FTX6550
FTX6240
FTX6535
FTX6585
FTX6590
FTX6577
FTX6577
FTX6255
FTX6577
FTX6550
(Dia. 4-1)
FTX6577
Rear Assembly
Motor Assembly
FTX6273
FTM4BF
FTX6271
FTBB10
FTX6270
FTX6267
FTX6268
FTX6275
FAST123
FTX6268
FTX6267
FTX6513
FTX6579
FTX6554
Brushed Motor
FTX6262
FTBB16
FAST122
ET0330-335
Brushless Motor
FTX6258
FTX6230
FTX6516
(Dia. 4-2)
FTX6535
FTX6225
FAST115
FTX6574
FTX6517
(Dia. 4-6)
Motor
ESC
Steering Assembly
FTX6525
FTX6537
Receiver
ET0411
Brushless Esc
FTX6557W
Brushed ESC
FTX6502
ET1090 WATERPROOF
2.4GHZ RECEIVER
FTX6559W
FTX6506
FTX6586
FTX6576
(Dia. 4-3)
(Dia. 4-4)
(Dia. 4-5)

Common Part List

FTX6560- Front Shock Tower 1pc	FTX6561-Rear Shock Tower 1pc	FTX6562-Front Shocks 2pc	FTX6563- Rear Shock Tower 2pc
FTX6564-Front Shock Spring 2pc	FTX6565-Rear Shock Spring 2pc	FTX6566-Front Shock Shaft & Piston Set 2sets	FTX6597-Rear Shock Shaft & Piston Set 2sets
FTX6568-Front Shock Body 2pc	FTX6569-Rear Shock body 2pc	FTX6570 -Shock Cap&Adjust Ring 2sets	FTX6571-Shock Lower holder 2sets
FTX6572-Sway Bar Fix Plate 6pcs	FTX6573-Steering Knuckle Arm 1set	FTX6216-Uprights 2pc	FTX6217-Rear Hub Carrier 2pc
FTX6213-Rear Drive Shaft 2pc	FTX6220-Front Susp. Holders 2pc	FTX6221-Rear Susp. Holders 2pc	FTX6225-Gearbox Housing Set 2pcs
FTX6226-Diff 16T Gear Washer 6pcs	FTX6227 -Diff.Drive Gear w/pin 2sets	FTX6236-Diff Gearbox Set 1set	FTX6228-Diff Case 2pcs

Part List

FTX6230-Diff Drive Gear 2pcs 13T 	FTX6235-Diff Bevel Gear S. 4pcs 10T 	FTX6232-Diff Bevel Gear B. 4pcs 13T 	FTX6233-Diff pin 2pcs 
FTX6574-Pinion Gear 30T 1pcs 	FTX6235-Diff Drive Cup 4pcs 	FTX6237-Center Coupler 3pcs 	FTX6575 -Body Post 1set 
FTX6240-Servo Saver Post 2pcs 	FTX6241-Steering Ackerman 1set 	FTX6597-Wheel Hub 4pcs 	FTX6242 -Servo Saver 1set 
FTBB14 Bearing 8x5x2.5mm 6pcs 	FTX6576 -Servo Horn 1pc 	FTX6255-Battery Cover 1pc 	FTX6577 -Battery and servo Post 1set 
FTX6505 -Sway Bar Holders 6pcs 	FTX6258-Motor Mount 1pc 	FTX6578 -Slipper Complete 1set 	FTX6267-Slipper Pad 2pcs 
FTX6268-Slipper Gasket 2pcs 	FTX6275-65T Spur Gear 1pc 	FTX6579-Slipper Shaft 1pc 	FTX6270 -Slipper Spring Bracket 1pc 

Part List

FTX6271-Slipper Spring 1pc	FTX6273 -Slipper Drive Cup 1pc	FTX6262 -Bearing Bracket 1pc	FTX6500 -Shock Ball End 6pcs
FTX6501 -Servo Link Ball End 6pcs	FTX6502 -Steering Linkage Ball End 6pcs	FTX6507 -Ball B 6pcs	FTX6506 -Ball A 6pcs
FTX6508 -Ball C 6pcs	FTX6510 -Shock 0-ring(Lower) 6pcs	FTX6511 -Diff 0-ring Seal 6pcs	FTX6580 -Shock Seal Cover 4pcs
FTX6513 -Pin ϕ2*10 6pcs	FTBB10 -Ball Bearing 15*10*4 6pcs	FTX6515 -Ball Bearing 10*5*4 6pcs	FTX6515 -E clip ϕ8mm 6pcs
FTX6517-E clip ϕ2.5mm 6pcs	FTX6516 -E clip ϕ4mm 6pcs	FTX6581 -Front Lower Susp.Arm 2pcs	FTX6582 -Rear Lower Susp.Arm 2pcs
FTX6583 -Front CVD 2sets	FTX6584-Upper Susp.Arm 4pcs	FTX6585-Steering Arm 2pcs	FTX6586 -Servo Linkage 1pc

Part List

FTX6523 -Round Head Self Tapping Hex Screw 3*10 8pcs	FTX6522 -Round Head Self Tapping Hex Screw M3*6 6pcs	FTX6525 -Button Head Hex Screw M3*8 6pcs	FTX6526 -Button Head Hex Screw M3*10 6pcs
FTX6527 -Button Head Hex Screw M3*12 6pcs	FTX6528 -Button Head Hex Screw M3*14 6pcs	FTX6535 -Flat Head Hex M3*8 6pcs	FTX6536 -Flat Head Hex Screw M3*10 8pcs
FTX6537 -Flat Head Hex Screw M3*12 6pcs	FTX6538 -Flat Head Hex Screw M3*14 6pcs	FTX6539 -Flat Head Hex Screw M3*18 3pcs	FTX6540 -Flat Head Hex Screw M3*20 6pcs
FTX6541 -Flat Head Hex Screw M3*36 6pcs	FAST118 -Cap Head Hex Screw M3 X 18 6PCS	FAST115 -Cap Head Hex Screw M3*10 6pcs	FTX6530 -Ring Self Tapping Screw 3*4 4pcs
FTX6543 -Set Screw M4*10 6pcs	FAST123 -Set Screw M4*4 6pcs	FAST122 -Set Screw M3*3 6pcs	FASTM3 -Nylon Lock Nut M3 6pcs
FTX6543 -Nylon Lock Nut M4 6pcs	FTX6587 -Bumper sponge 1pcs	FTX6588 -Sponge cover 1pcs	FTX6589 -Bumper Rail 1pcs

Part List

FTX6590-Chassiss plate 1pcs 	FTX6591-Upper plate 1pcs 	FTX6592-Bull board strengthen column 1pcs 	FTX6593 -Rear Dogbone 2pcs 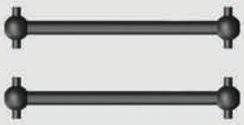
FTX6594 -Center Drive Shaft 1pcs 	FTX6595 -Hinge Pins(long & short) 1set 	FTX6559W-3kg/cm Servo 1pcs 	FAST0092B – Street/Drift Wheel & Tyre Set (4) 
ET1065 – Etronix 2.4ghz Sport ESR-1 Transmitter ET1090 – Etronix 2.4ghz Sport ESR-1 Receiver 	ET0411 Etronix 2.1W Brushless ESC 	FTX6551 -Body Clip(Small Size) 6pcs 	FTX6550 -Body Clip(Medium Size) 6pcs 
FTX6554 - 540 Brushed Motor 1pcs 	FTX6557W – 20A Waterproof Brushed ESC 	FTX6596 – Banzai Pre-printed body, decal & wing (un-cut) 	ET0330-335-3650(2950kv) Brushless Motor 1pcs 
VZ0010 – Voltz 1800mah NiMH Battery 	VZ0304 – Voltz 2500mah 7.4v 30C LiPo Battery (brushless esc only) 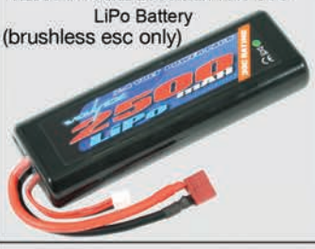		

Upgrade Parts List

FTX6487 -Sway Bar 1set 	FTX6488 -Chassis(Carbon) 1pc 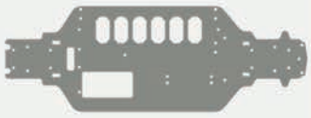	FTX6489 -Front Shock Tower(Carbon)1pc 	FTX6490 -Rear Shock Tower(Carbon) 1pc 
FTX6491 -Upper plate(Carbon) 1pc 	FTX6492 -Front Lower Susp.Arm(AL) 2pcs 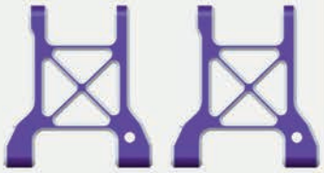	FTX6493 -Rear Lower Susp.Arm(AL) 2pcs 	FTX6494 -Steering Knuckle Arm(AL) 1set 
FTX6495 -Rear Hub Carrier(AL) 2pcs 	FTX6496 -Battery cover(AL) 3pcs 	FTX6497 -Front bumper cover(Carbon)1pc 	FTX6498 -Front Shocks (AL) 2pcs 
FTX6499 -Rear Shocks (AL) 2pcs 			

Notes:

BANZAI

www.ftx-rc.com

FTX is an exclusive brand of CML Distribution, Saxon House, Saxon Business Park,
Hanbury Road, Bromsgrove, Worcestershire, B60 4AD England.
E-mail: info@ftx-rc.com