STEEL CUT
DESIGN

www.steelcut.design

## INSTALL GUIDE

## ANGLE BRACKET

The angle bracket can be used for Left or Right installations by rotating it 180°.

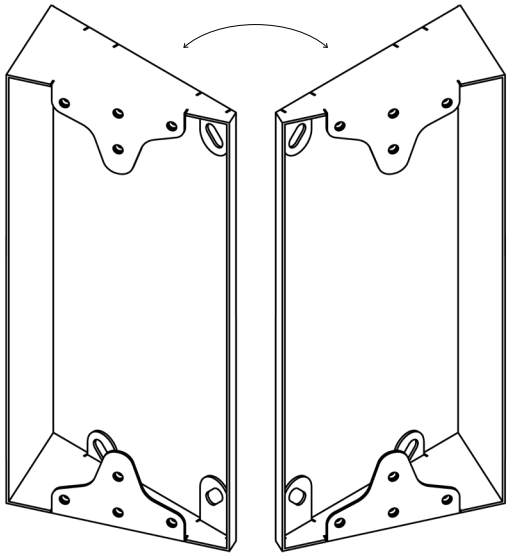

Top view

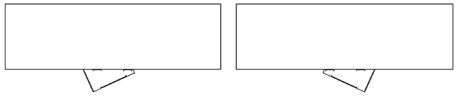

Left-side mount Right-side mount

## STEP 1

Use included mounting hardware to mount angle bracket to the wall.

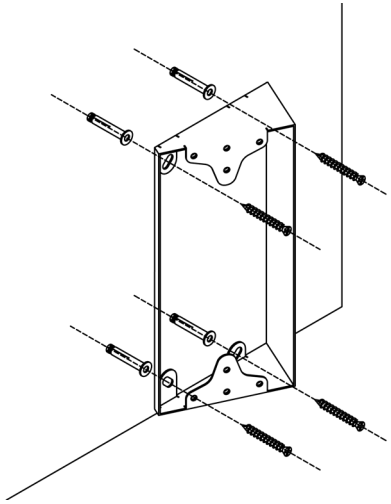

## STEP 2

Attach door station using 3 screws.

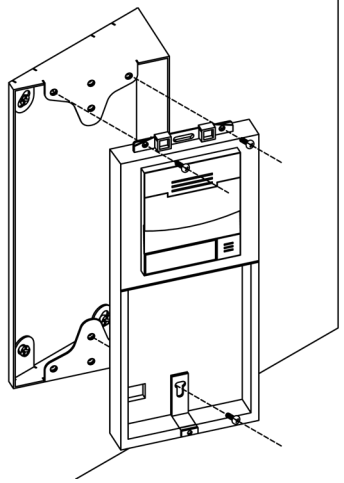

## STEP 3

Attach keypad and faceplate to door station following the manufacturer's instructions.

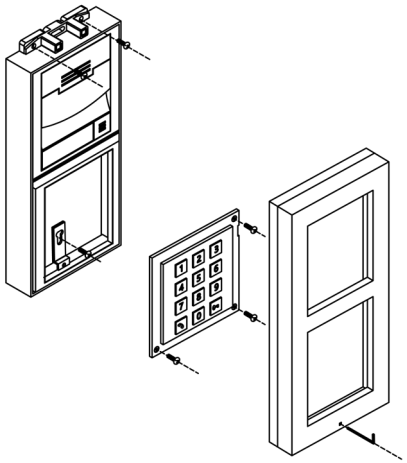

## NOTES