FH5029 Multifunctional storage rack

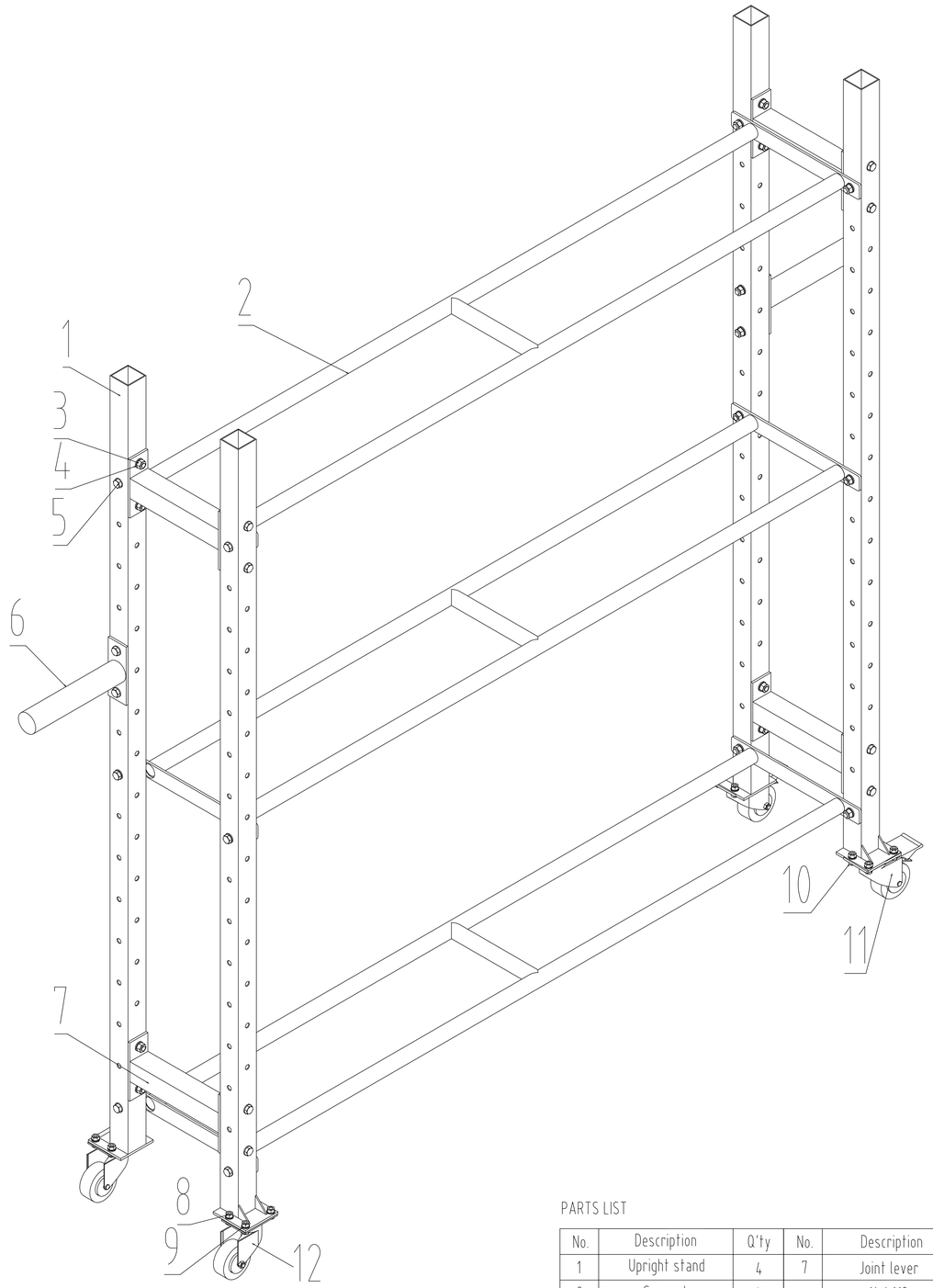

PARTS LIST

No.	Description	Q'ty	No.	Description	Q'ty
1	Upright stand	4	7	Joint lever	4
2	Support	3	8	Nut M8	16
3	Nut M10	32	9	Washer ϕ8	32
4	Washer ϕ10	64	10	Bolt M8×20	16
5	Bolt M10×70	32	11	3"Universal wheel	2
6	Plate storage	2	12	3" Wheel brake	2

FH5029 Multifunctional storage rack

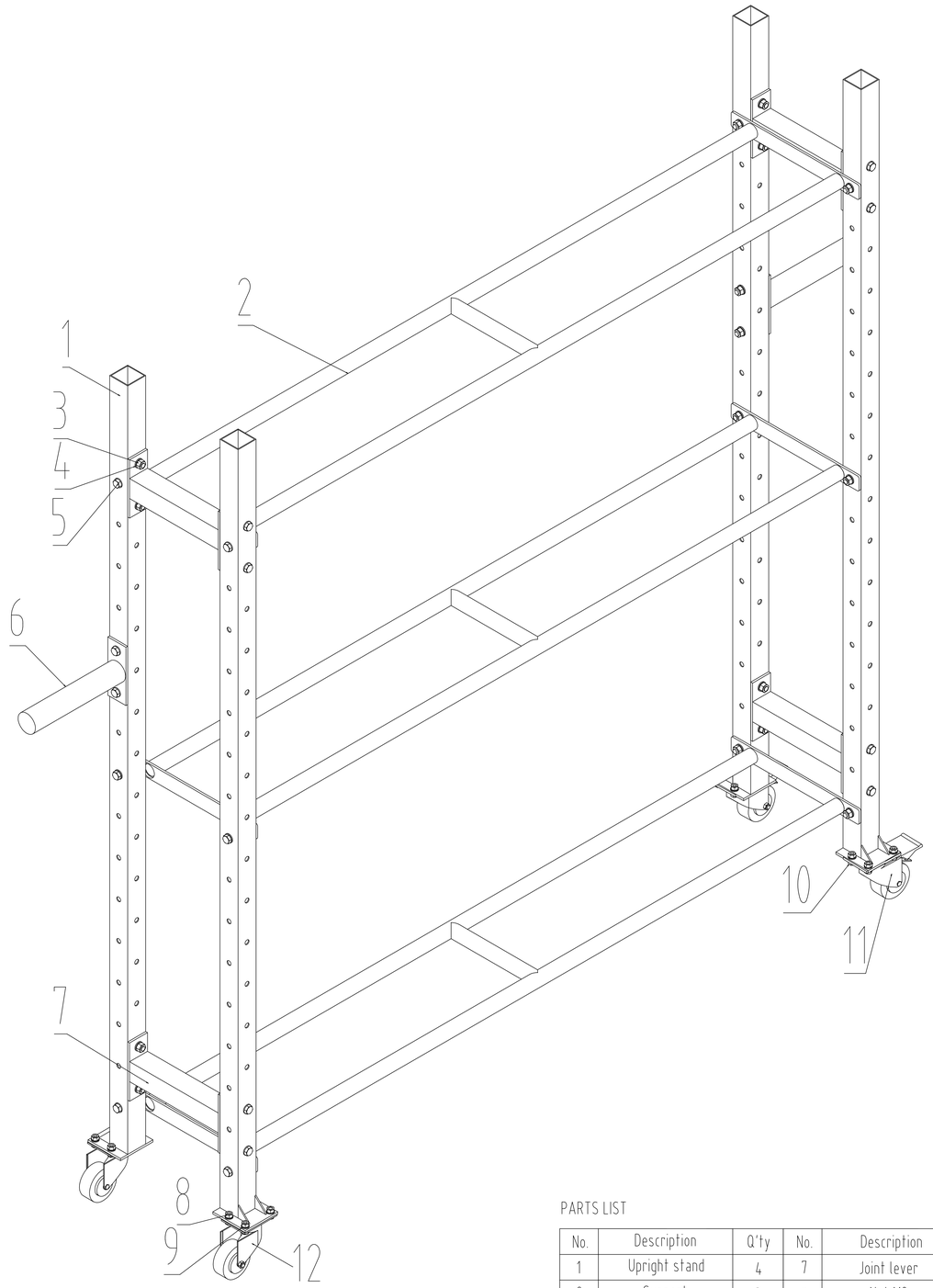

PARTS LIST

No.	Description	Q'ty	No.	Description	Q'ty
1	Upright stand	4	7	Joint lever	4
2	Support	3	8	Nut M8	16
3	Nut M10	32	9	Washer ϕ8	32
4	Washer ϕ10	64	10	Bolt M8×20	16
5	Bolt M10×70	32	11	3"Universal wheel	2
6	Plate storage	2	12	3" Wheel brake	2