TECHLEADER®
TOOLING INC.

Leading the Way...
In CNC Tooling Technology in the 21st Century

Leading the Way...

In CNC Tooling Technology in the 21st Century

We specialize in CNC tooling and workholding devices for horizontal and vertical machining and turning centers.

With two sales and distribution warehouses - in Buffalo, NY and Toronto, Ontario, Canada - our products are marketed through CNC equipment dealers and recognized industrial distributors throughout North America.

Our philosophy is to offer our customers quality, innovative tooling and accessories to increase the efficiency of their machining operation by reducing both set-up and cutting times.

We also strive to provide high-quality product at highly competitive prices. Our policy is to maintain sufficient stock levels in order to offer quick deliveries of standard off-the-shelf items.

With our depth of knowledge in the CNC field we can provide assistance for your special CNC tooling applications.

Let us be of service to you!

SECTION 1

Toolholders & Auxiliary Products

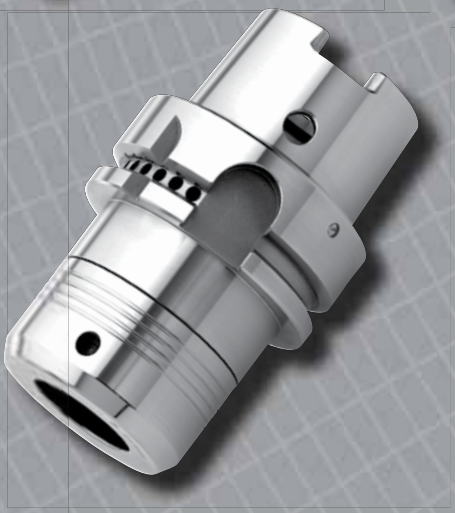

Techleader BT & CT CNC Toolholding & Auxiliary Products

Techleader BT and CT Toolholders for CNC machining centers have become one of the premier toolholder lines in North America. They are being used not only by many of the largest corporations but also by small and medium-sized job machining shops. Many of these companies are longtime users and repeat customers.

This customer loyalty is based on three solid reasons...a standard of accuracy and finish second to none, very competitive pricing and fast delivery.

Manufactured to the exacting JIS/DIN standard, the toolholder are made from SCM-415 steel and case hardened to 52 degrees - 58 degrees HRC. Precision is 0.0002" TIR held at the mouth of the inside diameter against the taper shank of the toolholder. The toolholders also maintain an 85% toolholder taper contact against the inside taper of the machine spindle, which equates to AT3 tolerance or better.

Techleader continuously strives for perfection and steadily introduces new products to make its customers more competitive in today's economy. We have now developed precision, ultra high-speed collets and milling chucks guaranteed to be balanced to G 2.5.

If you haven't tried Techleader CNC toolholders up to now give us a chance to prove why thousands of other companies always ask for us by name.

"Techleader, the best CNC toolholder money can buy".

TECHLEADER® TOOLING INC.

KURODA

ACE LOCK Milling Chucks

Milling Chucks

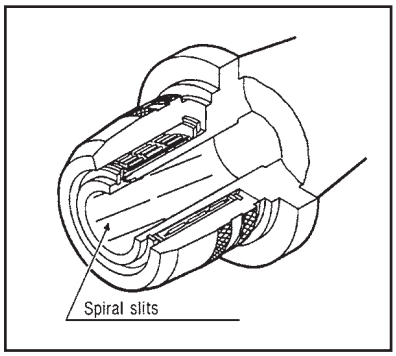

Spiral slits are precision-machined with a laser securely hold the cutter throughout the chucked length. Since these spiral slits can repel oil, the holding power is not affected and a minimum amount of oil, if any, will get on the cutter.

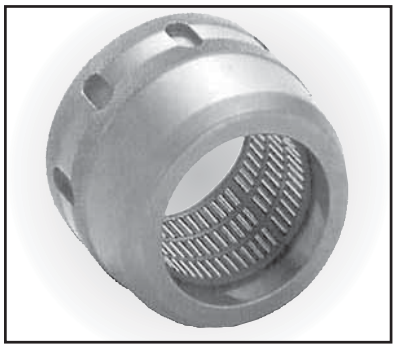

The retainer, cast in special precision mold, holds numerous rollers in a tight arrangement to reduce the face-pressure on the roller surface. This ensures both remarkable durability and outstanding chuck performance.

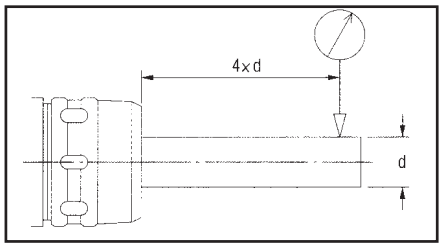

Run-out accuracy:

10 µm/0.0004” at the distance of 100 mm/4.00” from the end of the holder.

Achieve High Speed and Greater Accuracy with Kuroda ACE LOCK Milling Chucks from Techleader Tooling

To take advantage of the productivity gains offered by the latest CNC machining centers, your tool holding must be capable of handling faster cutter speeds and higher feed rates. Kuroda ACE LOCK Milling Chucks from Techleader Tooling are designed to give you the best of both worlds - speed and accuracy!

Greater Concentricity and Tighter Tolerances

CTR Series ACE LOCK Milling Chucks feature a simple yet unique design and quality construction to offer distinct performance advantages. The outside of the internal bore of the tool is precision-ground to a tapered surface. As the guided retaining cage turns, the roller bearing assembly tracks up this surface, forcing the bore down onto the tool shank. This provides uniform clamping pressure around the entire tool shank, keeping the centerline of the tool in exact alignment with the machine spindle.

Achieve Faster, Deeper Cuts without Tool Slippage

Strong stable clamping allows for faster, deeper cuts with minimal risk of tool pullout. This is achieved with minimal tightening torque.

Model	Clamping Torque
CTR - 3/4”	950N m (95kgf/m)
CTR - 1”	1500N m (155kgf/m)
CTR - 1- 1/4”	2900N m (295kgf/m)
CTR - 1- 1/2”	4900N m (500kgf/m)

Guaranteed Accuracy and Stronger Gripping Power

Machining accuracy for both heavy-duty and finish cutting is assured by means of the rigid nose design. When the tool is fitted and tightened, the ground surface on the back end of the locking collar comes into firm contact with the body of the milling chuck. The two pieces come together as a single, high-rigidity set-up to resist bending and torsion.

Variety of Rotating Speeds

CTR Series ACE LOCK Milling Chucks are available in four models to meet various rotating-speed requirements. (Note: achieving maximum rotation speed depends on the concentricity and symmetry of the tool.

Model	Maximum RPM
CTR - 3/4”	15,000
CTR - 1”	11,000
CTR - 1- 1/4”	7,000
CTR - 1- 1/2”	5,000

Less Waste Means More Productivity

CTR Series ACE LOCK Milling Chucks hold closer tolerances, resulting in better surface finishes and the reduction or elimination of other finishing operations, thus saving costs. Reliable cutting accuracy assures part consistency while reducing defects, reworks and returns. Milling chucks are also highly versatile, as they can hold a greater variety of tools.

Longer Tool life

The roller retainer cage is cast in a special precision mold and holds the optimum number of rollers in tight alignment for stronger, equal gripping power all the way around the tool. The cutting force is distributed equally, preventing uneven wear on cutting edges.

Hardened by heat-treating to resist wear, the steel alloy body provides increased resistance to rolling fatigue, thus maintaining high accuracy and clamping power over time and repeated use.

TECHLEADER® TOOLING INC.

KURODA

ACE LOCK Milling Chucks

BT

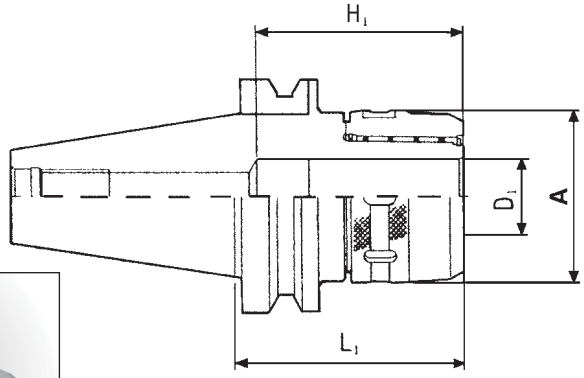

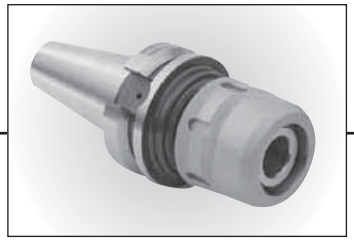

BT & CT Flange Tools

NOTE: Purchase collets separately. See page 1-3

Spanners not supplied with milling chucks. Purchase separately. See page 1-22

Taper	Order No.	Device Type	D_1 (in)	L_1 (in)	A (in)	H_1 (in)
30	465-405	BT30 – CTR 3/4" – 80	0.750	3.14	2.05	2.95
40	465-095	BT40 – CTR 3/4" – 80	0.750	3.15	2.05	2.95
40	465-105	BT40 – CTR 1-1/4" – 105	1.250	4.13	2.95	3.75
50	465-305	BT50 – CTR 1-1/4" – 105	1.250	4.13	2.95	3.75
50	465-306*	BT50 – CTR 1-1/4" SS – 150	1.250	5.91	2.88	3.15

* While stock lasts Richmill Brand

CT

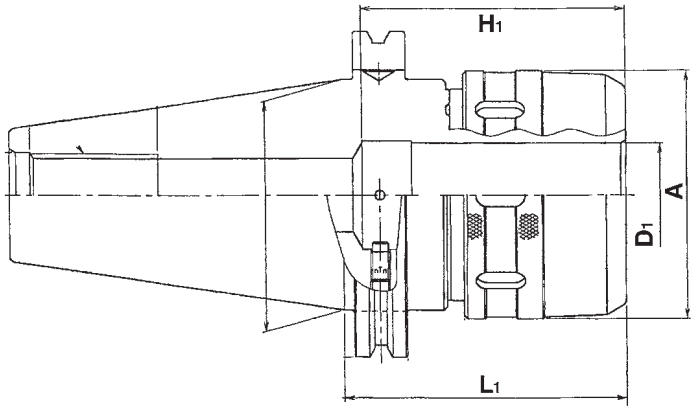

Taper	Order No.	Device Type	D_1 (in)	L_1 (in)	A (in)	H_1 (in)
40	466-095	CT40 – CTR 3/4" – 3.25	0.750	3.25	2.05	2.95
40	466-096	CT40 – CTR 3/4" – 5.00	0.750	5.00	1.97	2.36
40	466-100	CT40 – CTR 1" – 3.50	1.000	3.50	2.44	3.34
40	466-105	CT40 – CTR 1-1/4" – 4.00	1.250	4.00	2.95	3.74
40	466-106	CT40 – CTR 1-1/4" – 5.00	1.250	5.00	2.68	3.15
50	466-295	CT50 – CTR 3/4" – 3.50	0.750	3.50	2.05	2.95
50	466-305-S	CT50 – CTR 1-1/4" – 3.375	1.250	3.375	2.95	3.15
50	466-305	CT50 – CTR 1-1/4" – 4.50	1.250	4.50	2.95	3.74

* While stock lasts Richmill Brand

TECHLEADER® TOOLING INC.

KURODA

ACE LOCK Milling Chuck Collets

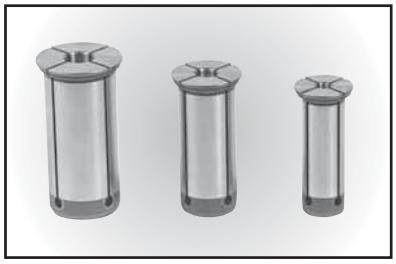

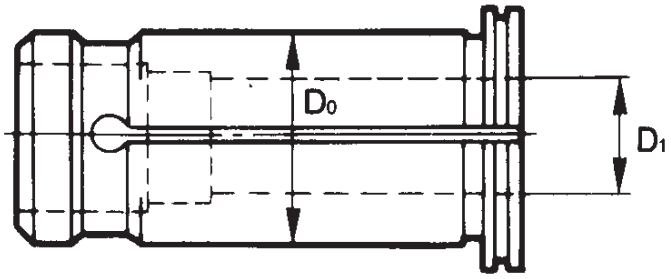

Straight Collets
For Milling Chuck

Order No.	Device Type	D_0 (in)	D_1 (in)
467-005	3/4 C – S 3/16	0.750	0.1875
467-010	3/4 C – S 1/4	0.750	0.250
467-015	3/4 C – S 5/16	0.750	0.3125
467-020	3/4 C – S 3/8	0.750	0.375
467-030	3/4 C – S 1/2	0.750	0.500
467-040	3/4 C – S 5/8	0.750	0.625
467-105	1 C – S 3/16	1.000	0.1875
467-110	1 C – S 1/4	1.000	0.250
467-115	1 C – S 5/16	1.000	0.3125
467-120	1 C – S 3/8	1.000	0.375
467-130	1 C – S 1/2	1.000	0.500
467-140	1 C – S 5/8	1.000	0.625
467-150	1 C – S 3/4	1.000	0.750
467-160	1 C – S 7/8	1.000	0.875
467-205	1-1/4 C – S 3/16	1.250	0.1875
467-210	1-1/4 C – S 1/4	1.250	0.250
467-215	1-1/4 C – S 5/16	1.250	0.3125
467-220	1-1/4 C – S 3/8	1.250	0.375
467-230	1-1/4 C– S 1/2	1.250	0.500
467-240	1-1/4 C – S 5/8	1.250	0.625
467-250	1-1/4 C – S 3/4	1.250	0.750
467-270	1-1/4 C – S 1	1.250	1.000
467-310*	1-1/2 C – S 1/4	1.500	0.250
467-315*	1-1/2 C – S 5/16	1.500	0.3125
467-320*	1-1/2 C – S 3/8	1.500	0.375
467-330*	1-1/2 C – S 1/2	1.500	0.500
467-340*	1-1/2 C – S 5/8	1.500	0.625
467-350*	1-1/2 C – S 3/4	1.500	0.750
467-360*	1-1/2 C – S 7/8	1.500	0.875
467-370*	1-1/2 C – S 1	1.500	1.000
467-380*	1-1/2 C – S 1-1/4	1.500	1.250
467-470*	2 C – S 1	2.000	1.000
467-480*	2 C – S 1-1/4	2.000	1.250
467-490*	2 C – S 1-1/2	2.000	1.500

* While stock lasts Richmill Brand

TECHLEADER® TOOLING INC.

TG Collet Chucks

BT & CT Flange Tools

TG Collet Chucks

For use with TG style collets. See pages 3-1 and 3-2 for collet information

BT

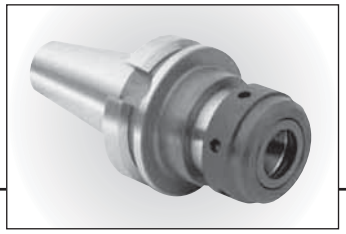

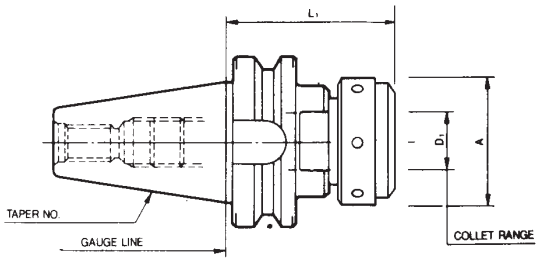

Taper	Order No.	Device Type	D_1 (in)	L_1 (in)	A (in)
30	473-400	BT30 – TG75 – 63.5	0.046 – 0.750	2.50	1.875
30	473-405	BT30 – TG100 – 101.6	0.046 – 1.000	4.00	2.50
40	473-100	BT40 – TG75 – 76.2	0.046 – 0.750	3.00	1.875
40	473-105	BT40 – TG100 – 100	0.046 – 1.000	3.94	2.50
40	473-106	BT40 – TG100 – 133	0.046 – 1.000	5.25	2.50
40	473-107	BT40 – TG100 – 184	0.046 – 1.000	7.25	2.50
45	473-205*	BT45 – TG100 – 100	0.046 – 1.000	3.94	2.50
45	473-215*	BT45 – TG150 – 100	0.500 – 1.500	3.94	3.25
50	473-305	BT50 – TG100 – 100	0.046 – 1.000	3.94	2.50
50	473-306	BT50 – TG100 – 152	0.046 – 1.000	6.00	2.50
50	473-315*	BT50 – TG150 – 100	0.500 – 1.500	3.94	3.25

CT

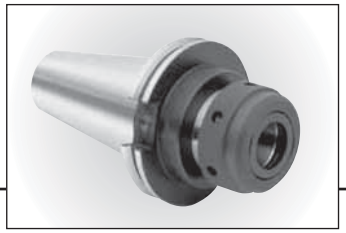

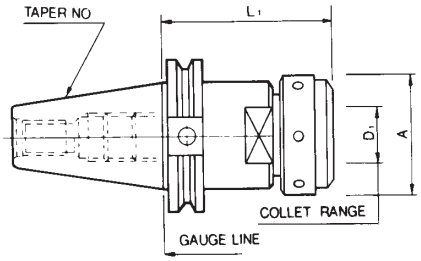

Taper	Order No.	Device Type	D_1 (in)	L_1 (in)	A (in)
40	474-100	CT40 – TG75 – 3.00	0.046 – 0.750	3.00	1.875
40	474-105	CT40 – TG100 – 3.25	0.046 – 1.000	3.25	2.50
40	474-106	CT40 – TG100 – 5.25	0.046 – 1.000	5.25	2.50
40	474-107	CT40 – TG100 – 7.25	0.046 – 1.000	7.25	2.50
40	474-115*	CT40 – TG150 – 5.00	0.500 – 1.500	5.00	3.25
45	474-205*	CT45 – TG100 – 3.13	0.046 – 1.000	3.13	2.50
45	474-206*	CT45 – TG100 – 5.13	0.046 – 1.000	5.13	2.50
45	474-207*	CT45 – TG100 – 7.13	0.046 – 1.000	7.13	2.50
50	474-305	CT50 – TG100 – 3.13	0.046 – 1.000	3.13	2.50
50	474-306	CT50 – TG100 – 5.13	0.046 – 1.000	5.13	2.50
50	474-307	CT50 – TG100 – 7.13	0.046 – 1.000	7.13	2.50
50	474-315	CT50 – TG150 – 3.50	0.500 – 1.500	3.50	3.25

* While stock is still available.

TECHLEADER® TOOLING INC.

TG Collet Chucks Balanced

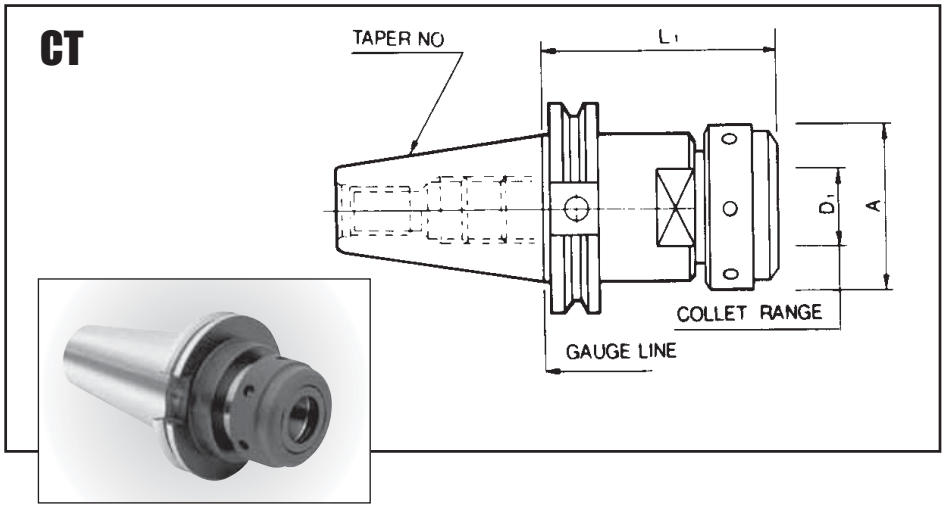

BT & CT Flange Tools

For use with TG style collets. See pages 3-1 and 3-2 for collet information

BT Taper

Taper	Order No.	Device Type	Collet Style	D_1 Collet Range (in)	L_1 (in)	A (in)	Max RPM
30	473-000-B	BT30-TG75-63.5	TG75	0.046-0.750	2.50	1.875	15,000
30	473-005-B	BT30-TG100-100	TG100	0.063-1.000	3.94	2.50	15,000
40	473-200-B	BT40-TG75-76.2	TG75	0.046-0.750	3.00	1.875	15,000
40	473-205-B	BT40-TG100-100	TG100	0.063-1.000	3.94	2.50	15,000
40	473-206-B	BT40-TG100-133	TG100	0.063-1.000	5.25	2.50	15,000
40	473-207-B	BT40-TG100-184	TG100	0.063-1.000	7.25	2.50	10,000
50	473-405-B	BT50-TG100-100	TG100	0.063-1.000	3.94	2.50	12,000
50	473-406-B	BT50-TG100-152	TG100	0.063-1.000	6.00	2.50	10,000

CT Taper

Taper	Order No.	Device Type	Collet Style	D_1 Collet Range (in)	L_1 (in)	A (in)	Max RPM
40	474-200-B	CT40-TG75-3.00	TG75	0.046-0.750	3.00	1.875	15,000
40	474-205-B	CT40-TG100-3.25	TG100	0.063-1.000	3.25	2.50	15,000
40	474-206-B	CT40-TG100-5.25	TG100	0.063-1.000	5.25	2.50	15,000
40	474-207-B	CT40-TG100-7.25	TG100	0.063-1.000	7.25	2.50	10,000
50	474-400-B	CT50-TG75-3.50	TG75	0.046-0.750	3.50	1.875	12,000
50	474-405-B	CT50-TG100-3.13	TG100	0.063-1.000	3.13	2.50	12,000
50	474-406-B	CT50-TG100-5.13	TG100	0.063-1.000	5.13	2.50	10,000

NOTE: Achieving maximum rotation speed depends on the concentricity and symmetry of the cutting tool and the complete tool assembly.

TECHLEADER® TOOLING INC.

TG Collet Chucks
DIN 69871-Form B
Coolant Through The Flange

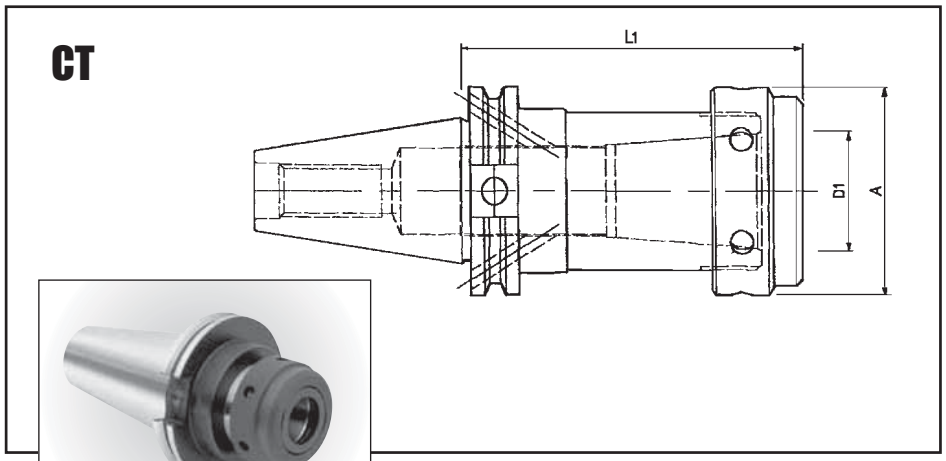

CT Flange Tools

For use with TG style coolant sealed collets. See pages 3-3 for collet information

CT Taper

Taper	Order No.	Device Type	Collet Style	D_1 Collet Range (in)	L_1 (in)	A (in)	Max RPM
40	474-200-D	CT40D-TG75-3.00	TG75	0.046-0.750	3.00	1.875	15,000
40	474-205-D	CT40D-TG100-3.25	TG100	0.063-1.000	3.25	2.50	15,000
40	474-206-D	CT40D-TG100-5.25	TG100	0.063-1.000	5.25	2.50	15,000
40	474-207-D	CT40D-TG100-7.25	TG100	0.063-1.000	7.25	2.50	10,000
50	474-400-D	CT50D-TG75-3.50	TG75	0.046-0.750	3.50	1.875	15,000
50	474-405-D	CT50D-TG100-3.13	TG100	0.063-1.000	3.13	2.50	15,000
50	474-406-D	CT50D-TG100-5.13	TG100	0.063-1.000	5.13	2.50	10,000
50	474-407-D	CT50D-TG100-7.13	TG100	0.063-1.000	7.13	2.50	8,000

NOTE: Achieving maximum rotation speed depends on the concentricity and symmetry of the cutting tool and the complete tool assembly.

R8 & NMTB-QC, TG Collet Chucks

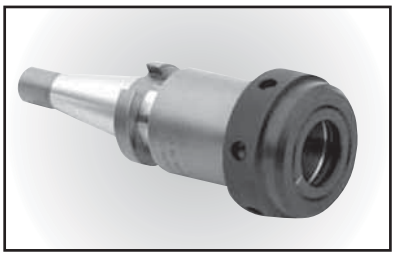

TG Collet Chucks

NMTB tool holders are qualified for use with Erickson QC spindles

For TG Collets, see pages 3-1 to 3-2

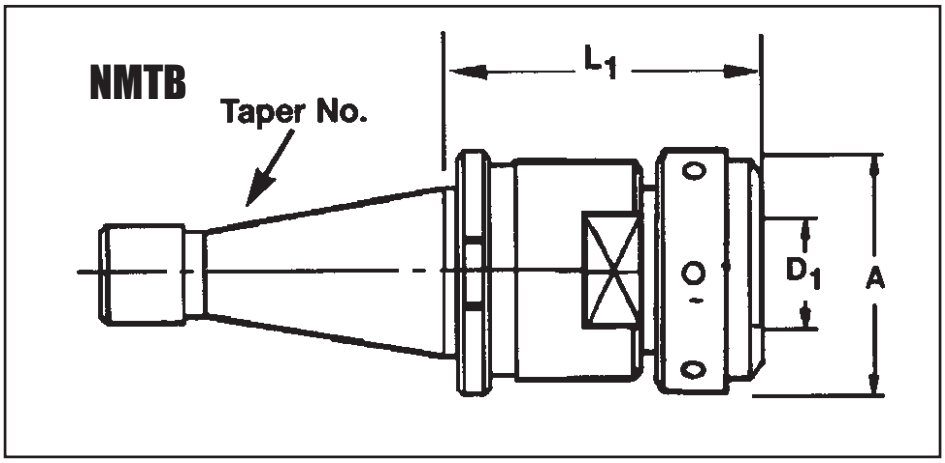

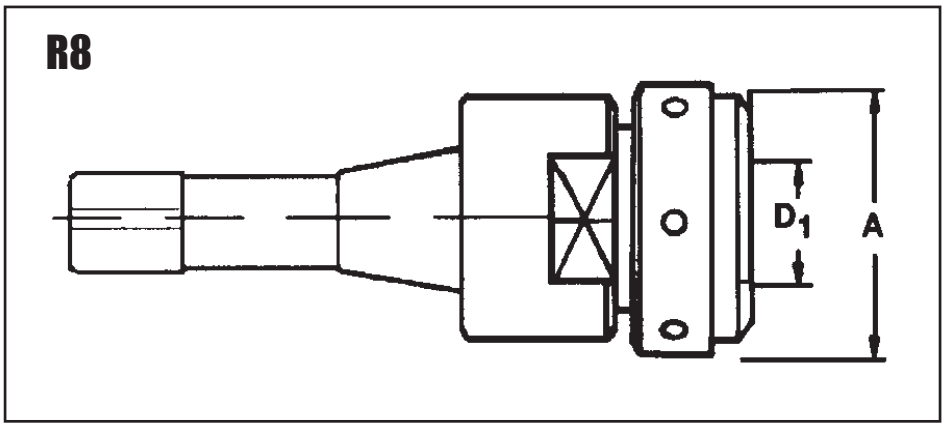

Taper	Order No.	Device Type	D_1 (in)	L_1 (in)	A (in)
30	674-000	NMTB30QC – TG75-2.50	0.046 – 0.750	2.50	1.875
30	674-005	NMTB30QC – TG100-4.00	0.046 – 1.000	4.00	2.50
40	674-200	NMTB40QC – TG75-2.50	0.046 – 0.750	2.50	1.875
40	674-205	NMTB40QC – TG100-3.00	0.046 – 1.000	3.00	2.50
50	674-405	NMTB50QC – TG100-3.50	0.046 – 1.000	3.50	2.50
50	674-415	NMTB50QC – TG150-5.00	0.500 – 1.500	5.00	3.25
R8	674-805	R8-TG100	0.046 – 1.000	–	2.50

TECHLEADER® TOOLING INC.

Double Angle Collet Chucks

BT

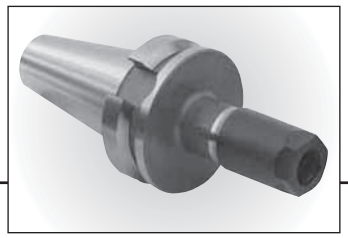

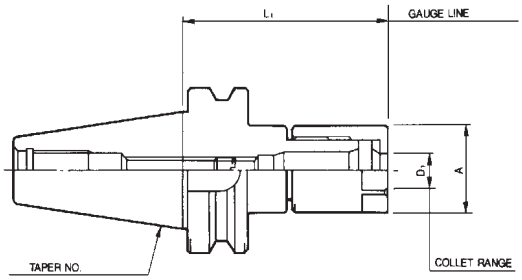

BT & CT Flange Tools

For use with Double Angle style collets. See pages 3-5 and 3-6 for collet information

Taper	Order No.	Device Type	D_1 (in)	L_1 (in)	A (in)
30	475-430	BT30 – C300 – 60	0.031 – 0.250	2.36	0.8255
30	475-420	BT30 – C200 – 60	0.046 – 0.375	2.36	1.25
30	475-410	BT30 – C100 – 100	0.046 – 0.562	3.94	1.06
30	475-418	BT30 – C180 – 75	0.046 – 0.750	2.95	1.85
35	475-030*	BT35 – C300 – 60	0.031 – 0.250	2.36	0.8255
35	475-020*	BT35 – C200 – 60	0.046 – 0.375	2.36	1.25
35	475-010*	BT35 – C100 – 90	0.046 – 0.562	3.54	1.06
35	475-018*	BT35 – C180 – 75	0.046 – 0.750	2.95	1.85
40	475-130	BT40 – C300 – 65	0.031 – 0.250	2.55	0.8255
40	475-120	BT40 – C200 – 65	0.046 – 0.375	2.55	1.25
40	475-110	BT40 – C100 – 90	0.046 – 0.562	3.54	1.06
40	475-118	BT40 – C180 – 75	0.046 – 0.750	2.95	1.85

CT

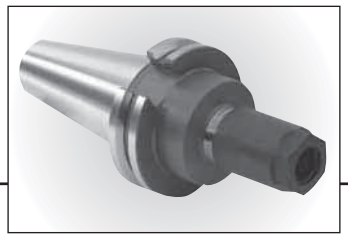

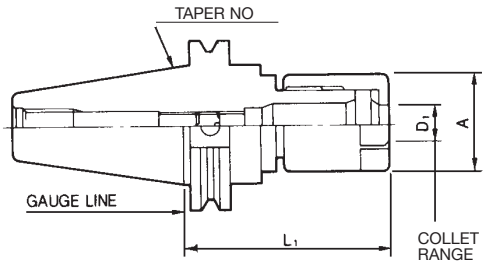

Taper	Order No.	Device Type	D_1 (in)	L_1 (in)	A (in)
40	476-130	CT40 – C300 – 2.50	0.031 – 0.250	2.50	0.8255
40	476-120	CT40 – C200 – 2.50	0.046 – 0.375	2.50	1.25
40	476-110	CT40 – C100 – 3.25	0.046 – 0.562	3.25	1.06
40	476-118	CT40 – C180 – 3.00	0.046 – 0.750	3.00	1.85

* While stock is still available.

TECHLEADER® TOOLING INC.

NMTB Double Angle Collet Chucks & Extensions

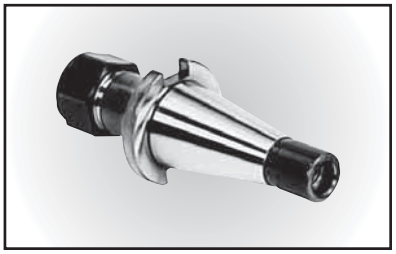

NMTB Flange Tools

NMTB tool holders are qualified for use with Erickson QC spindles

For Double Angle Collets, see pages 3-5 and 3-6

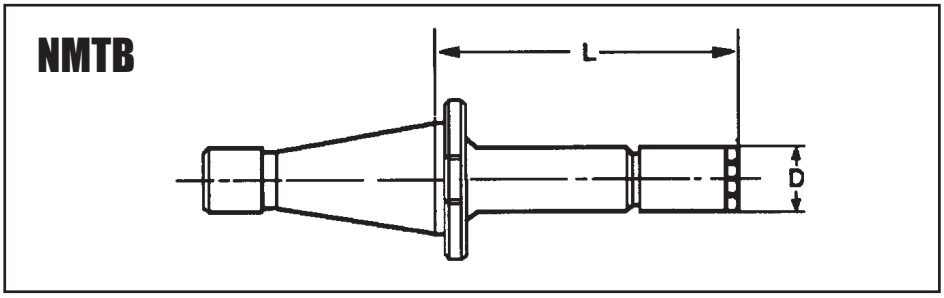

Taper	Order No.	Device Type	D_1 (in)	L_1 (in)	A (in)
30	676-030	NMTB30QC – C300-2.50	0.031– 0.250	2.50	0.825
30	676-020	NMTB30QC – C200-2.50	0.046 – 0.375	2.50	1.25
30	676-010	NMTB30QC – C100-2.75	0.046 – 0.562	2.75	1.06
30	676-018	NMTB30QC – C180-3.00	0.046 – 0.750	3.00	1.85
40	676-230	NMTB40QC – C300-2.50	0.031 – 0.250	2.50	0.825
40	676-220	NMTB40QC – C200-2.50	0.046 – 0.375	2.50	1.25
40	676-210	NMTB40QC – C100-2.75	0.046 – 0.562	2.75	1.06
40	676-218	NMTB40QC – C180-3.00	0.046 – 0.750	3.00	1.85
50	676-418	NMTB50QC – C180-3.50	0.046 – 0.750	3.50	1.85

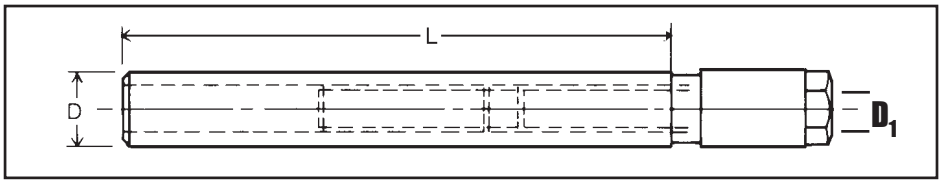

Double Angle Collet Extensions

To ensure long life of accuracy and durability, the Techleader Double Angle Tool Extensions are manufactured utilizing the latest technology of heat treat and processing, combined with high quality carbon steel. The product is hardened and tempered with a high degree of accuracy outlasting our competitors and making us No. 1 in quality and precision.

EXTENSIONS					NUTS
Order No.	Range D_1 (in)	Collet	D (in)	L (in)	Order No.
030-000	0.031 - 0.250	300DA	1/2	5-1/2	030-000-NI
030-000S	0.031 - 0.250	300DA	1/2	3.60”	030-000-NI
030-00IS	0.031 - 0.250	300DA	5/8	3.75”	030-000-NI
020-000	0.047 - 0.375	200DA	3/4	5-1/2	020-000-NI
020-000S	0.047 - 0.375	200DA	5/8	3.75”	020-000-NI
020-00IS	0.047 - 0.375	200DA	3/4	3.80”	020-000-NI
010-000	0.047 - 0.562	100DA	1	5-1/2	010-000-NI
010-000S	0.047 - 0.562	100DA	1	4.00”	010-000-NI
018-000	0.047 - 0.750	180DA	1-1/4	5-1/2	018-000-NI
018-001	0.047 - 0.750	180DA	1	6.20”	018-000-NI

TECHLEADER® TOOLING INC.

HP plus

Increased Clamping Force

A new standard in collet chucks are the HP plus series. The innovative design, which uses a patented mechanical clamping wedge, has significantly increased clamping force compared to a conventional collet chuck. The collet chuck utilizes High Precision Plus collets and can help you increase cutting tool life - up to 4 times longer.

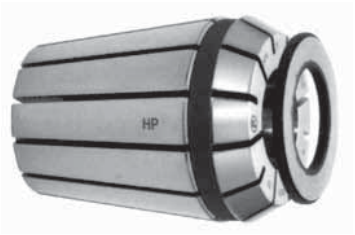

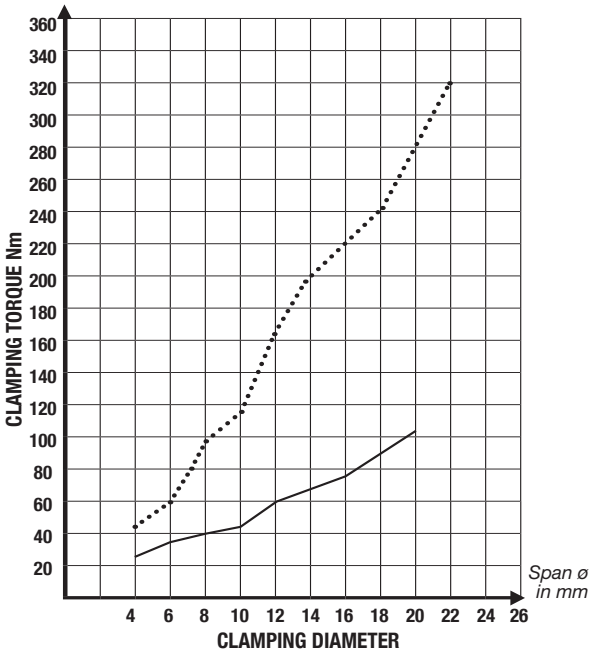

Precise

Constant concentricity and repeatable accuracy 3 µm at distance 3xD (max. 50 mm). Pure axial clamping of the collet by means of a clamping sleeve and clamping nut result in no torsion moments.

Simple

Clamping by means of a hexagon T-key – Opening by means of our patented ejection mechanism (no eccentric) permits a quick an easy tool and collet change on the machine spindle or in you hand. The collet is only shifted axially. There are no radial forces to have a negative influence on the concentricity.

Safe

Clamping forces of 300 Nm and more can be produced my hand.

Clamping torque
The transferable torque moments are shown in the diagram below and to the side.

Test result with:
- no grease (collet and tool shank)
- with test master Rz=2,5

We recommend using a torque wrench to guarantee safe clamping.

Symmetrical

Symmetrical design ideal for HSC applications. Standard tool holders are fine balanced to G6.3.

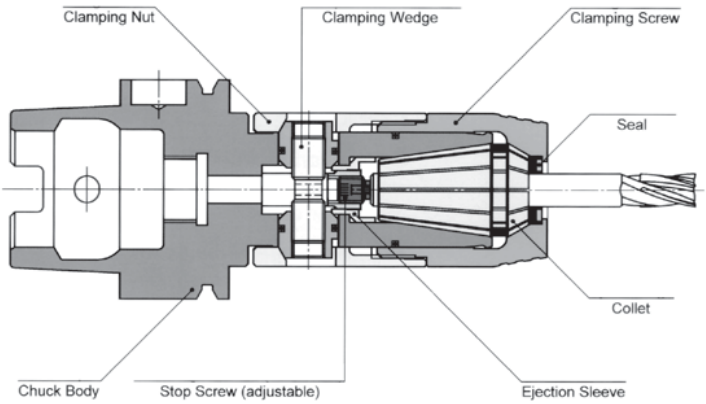

TECHLEADER® TOOLING INC.

HP Plus-High Performance Chucks

BT - HP PLUS

ORDER NO.	DESCRIPTION	COLLET STYLE	COLLET RANGE	L	RPM	A
481-016-HP	BT30-HP16-70mm	ECX/ER16	0.020”-0.394”	70 mm	15,000	28 mm
481-216-HP	BT40-HP16-75mm	ECX/ER16	0.020”-0.394”	75 mm	15,000	28 mm
481-217-HP	BT40-HP16-160mm	ECX/ER16	0.020”-0.394”	160 mm	15,000	28 mm
481-032-HP	BT30-HP32-105mm	ECX/ER32	0.080”-0.787”	105 mm	15,000	48 mm
481-232-HP	BT40-HP32-105mm	ECX/ER32	0.080”-0.787”	105 mm	15,000	48 mm
481-233-HP	BT40-HP32-160mm	ECX/ER32	0.080”-0.787”	160 mm	15,000	48 mm

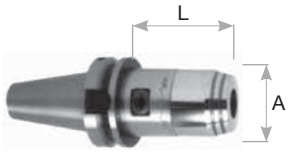

CT - HP PLUS

ORDER NO.	DESCRIPTION	COLLET STYLE	COLLET RANGE	L	RPM	A
482-232-HP	CT40-HP32-116 mm	ECX/ER32	0.080”-0.787”	116 mm	15,000	48 mm
481-432-HP	CT50-HP32-116 mm	ECX/ER32	0.080”-0.787”	116 mm	12,000	48 mm

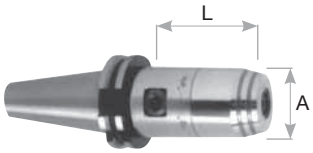

HSK-A HP PLUS

ORDER NO.	DESCRIPTION	COLLET STYLE	COLLET RANGE	L	RPM	A
586-316-AHP	HSK40A-HP16-70mm	ECX/ER16	0.020”-0.394”	70 mm	25,000	28 mm
586-516-AHP	HSK63A-HP16-80mm	ECX/ER16	0.020”-0.394”	80 mm	30,000	28 mm
586-517-AHP	HSK63A-HP16-160mm	ECX/ER16	0.020”-0.394”	160 mm	30,000	28 mm
586-532-AHP	HSK63A-HP32-105mm	ECX/ER32	0.080”-0.787”	105 mm	20,000	48 mm
586-533-AHP	HSK63A-HP32-160mm	ECX/ER32	0.080”-0.787”	160 mm	15,000	48 mm

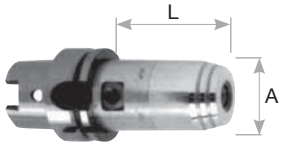

HSK-E/F HP PLUS

ORDER NO.	DESCRIPTION	COLLET STYLE	COLLET RANGE	L	RPM	A
587-316-EHP	HSK40E-HP16-70mm	ECX/ER16	0.020”-0.394”	70 mm	30,000	28 mm
588-316-FHP	HSK40F-HP16-100mm	ECX/ER16	0.020”-0.394”	100 mm	30,000	28 mm
587-416-EHP	HSK50E-HP16-75mm	ECX/ER16	0.020”-0.394”	75 mm	30,000	28 mm
587-516-EHP	HSK63E-HP16-80mm	ECX/ER16	0.020”-0.394”	80 mm	25,000	28 mm
588-516-FHP	HSK63F-HP16-80mm	ECX/ER16	0.020”-0.394”	80 mm	30,000	28 mm
587-532-EHP	HSK63E-HP32-105mm	ECX/ER16	0.020”-0.394”	105 mm	28,000	48 mm
588-532-FHP	HSK63F-HP32-105mm	ECX/ER32	0.080”-0.787”	160 mm	28,000	48 mm

ECX/ER16 3 µm/0.00012” HP+ SUPER ULTRA PRECISION COLLETS & COOLANT SEAL DISC

ORDER NO.	CLAMPING SIZE	ORDER NO.	CLAMPING SIZE
016-040 HPP	1.0 mm	016-004 HPP	1/16”
016-060 HPP	1.5 mm	016-008 HPP	1/8”
016-080 HPP	2.0 mm	016-012 HPP	3/16”
016-120 HPP	3.0 mm	016-016 HPP	1/4”
016-160 HPP	4.0 mm	016-020 HPP	5/16”
016-200 HPP	5.0 mm	016-024 HPP	3/8”
016-240 HPP	6.0 mm	–	–
016-280 HPP	7.0 mm	–	–
016-320 HPP	8.0 mm	–	–
016-360 HPP	9.0 mm	–	–
016-400 HPP	10.0 mm	–	–

ECX/ER32 3 µm/0.00012” HP+ SUPER ULTRA PRECISION COLLETS & COOLANT SEAL DISC

ORDER NO.	CLAMPING SIZE	ORDER NO.	CLAMPING SIZE
032-080 HPP	2 mm	032-008 HPP	1/8”
032-120 HPP	3 mm	032-012 HPP	3/16”
032-160 HPP	4 mm	032-016 HPP	1/4”
032-200 HPP	5 mm	032-020 HPP	5/16”
032-240 HPP	6 mm	032-024 HPP	3/8”
032-280 HPP	7 mm	032-028 HPP	7/16”
032-320 HPP	8 mm	032-032 HPP	1/2”
032-360 HPP	9 mm	032-036 HPP	9/16”
032-400 HPP	10 mm	032-040 HPP	5/8”
032-440 HPP	11 mm	032-048 HPP	3/4”
032-480 HPP	12 mm	–	–
032-520 HPP	13 mm	–	–
032-560 HPP	14 mm	–	–
032-600 HPP	15 mm	–	–
032-640 HPP	16 mm	–	–
032-680 HPP	17 mm	–	–
032-720 HPP	18 mm	–	–
032-760 HPP	19 mm	–	–
032-800 HPP	20 mm	–	–

HP PLUS WRENCH

ORDER NO.	DESCRIPTION
016-000-WHP	HP+16 WRENCH
032-000-WHP	HP+32 WRENCH

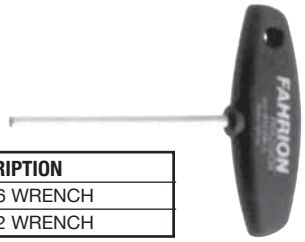

TECHLEADER® TOOLING INC.

The best the market has to offer.

No more experimenting with collet chucks, when it comes to clamping cutting tools, collet technology cannot be beaten in terms of reliability, profitability and efficiency. And when top quality and high precision are required, there is no alternative to Techleader.

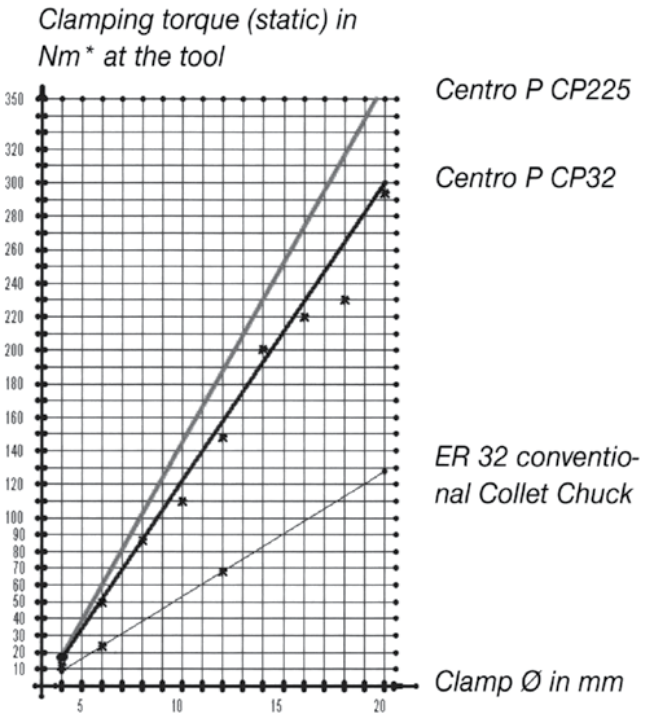

*Clamping torque of the clamping nut 105 Nm, tool shank hardened, ground (Rz 2.5) and free of grease

CENTRO P

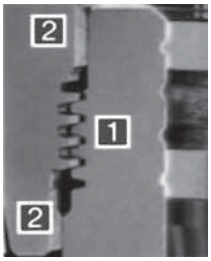

Precise

New: 30º trapezoidal thread (1) with ground, extra long double-length guide (2). The ground trapezoidal thread reduces friction and, together with the extra long, double-length guide, ensures perfect centering of the clamping nut on the chuck, thus achieving perfect distribution of load and minimal imbalance. The result: extreme high concentricity and repeatability.

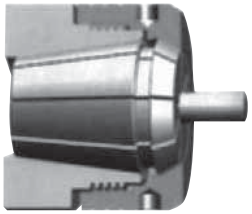

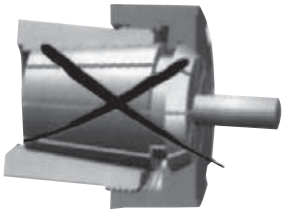

Previously: 60º vee form thread without guiding. Tightening requires very high starting torque. Often expansion levers or hammers are used. The result: damage and loss of precision. The clamping nut can also tilt (skew) on the 60º thread surfaces. This leads to side loads on the Collet and loss of concentricity and repeatability of the system.

Stable

Centro P provides evenly distributed clamping forces over the gripping area of the cutting tool shank. Reduced radial forces result in perfect milling surfaces.

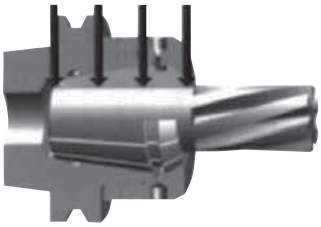

TECHLEADER Centro P

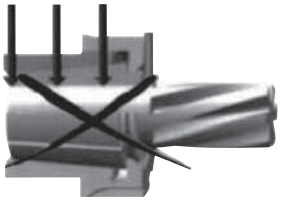

Collet Chuck system with flat shoulder

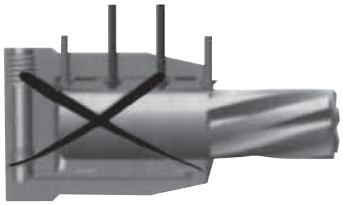

Hydraulic Chuck

Perfect clamping ***(Recommended for HPC)***

Reduced clamping force

Accurate

Constant system accuracy with TECHLEADER Ultra Precision Collets at *≤ 5 µm/0.0002” or with the TECHLEADER HP+ Collets at *≤ 3 µm/0.00012”.

*Checked at the cutting tool at a distance of 3 x D (max. 50mm)

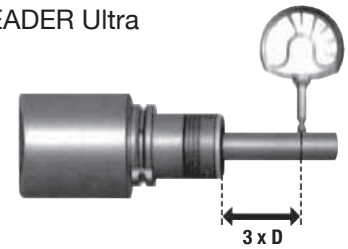

Universal

Ideal for drilling, milling, reaming and tapping.

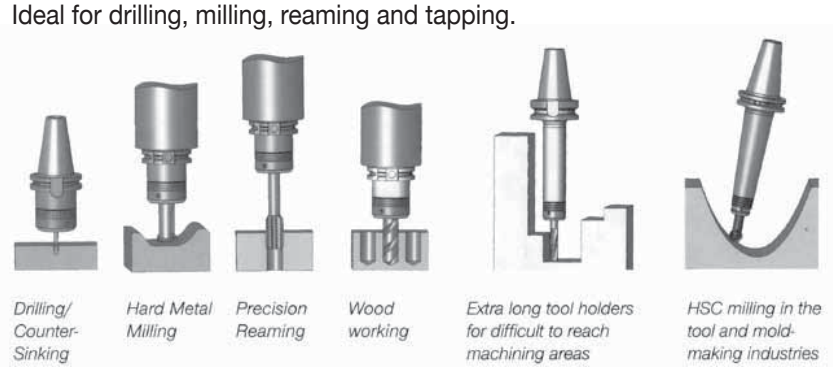

Unmistakable

Due to the unique design of the TECHLEADER HPC Clamping Nut with trapezoidal thread and double-length guide Centro P is ideal for High Performance Cutting.

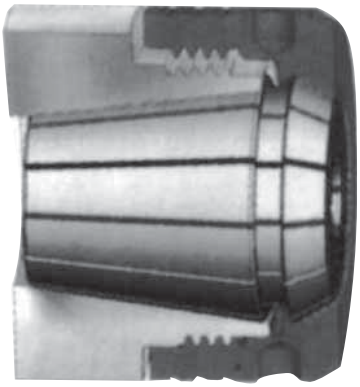

TECHLEADER® TOOLING INC.

CENTRO P - The best the market has to offer.

BT CENTRO P ECX/ER ULTRA PRECISION COLLET CHUCK WITHOUT NUT

ORDER NO.	DESCRIPTION	COLLET STYLE	COLLET RANGE	L	RPM	A
481-216-CP	BT40-CP16-70mm	ECX/ER16	0.020”-0.394”	70 mm	15,000	28 mm
481-217-CP	BT40-CP16-100mm	ECX/ER16	0.020”-0.394”	100 mm	15,000	28 mm
481-232-CP	BT40-CP32-70mm	ECX/ER32	0.080”-0.787”	70 mm	15,000	48 mm
481-233-CP	BT40-CP32-100mm	ECX/ER32	0.080”-0.787”	100 mm	15,000	48 mm

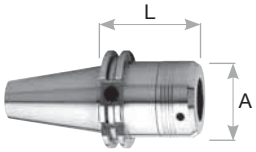

CT CENTRO P ECX/ER ULTRA PRECISION COLLET CHUCK WITHOUT NUT

ORDER NO.	DESCRIPTION	COLLET STYLE	COLLET RANGE	L	RPM	A
482-216-CP	CT40-CP16-2.50”	ECX/ER16	0.020”-0.394”	2.50”	15,000	28 mm
482-217-CP	CT40-CP16-4.00”	ECX/ER16	0.020”-0.394”	4.00”	15,000	28 mm
482-232-CP	CT40-CP32-3.00”	ECX/ER32	0.080”-0.787”	3.00”	15,000	48 mm
482-233-CP	CT40-CP32-5.00”	ECX/ER32	0.080”-0.787”	5.00”	15,000	48 mm
482-432-CP	CT50-CP32-3.50”	ECX/ER32	0.080”-0.787”	3.50”	12,000	48 mm

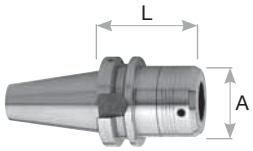

HSK-A CENTRO P ECX/ER ULTRA PRECISION COLLET CHUCK WITHOUT NUT

ORDER NO.	DESCRIPTION	COLLET STYLE	COLLET RANGE	L	RPM	A
586-516ACP	HSK63A-CP16-100mm	ECX/ER16	0.020”-0.394”	100 mm	20,000	28 mm
586-517ACP	HSK63A-CP16-160mm	ECX/ER16	0.020”-0.394”	160 mm	20,000	28 mm
586-532ACP	HSK63A-CP32-70mm	ECX/ER32	0.080”-0.787”	70 mm	20,000	48 mm
586-533ACP	HSK63A-CP32-100mm	ECX/ER32	0.080”-0.787”	100 mm	20,000	48 mm
586-534ACP	HSK63A-CP32-160mm	ECX/ER32	0.080”-0.787”	160 mm	20,000	48 mm

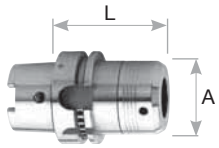

ECX/ER16 5 µm/0.0002” ULTRA PRECISION COLLETS WITHOUT COOLANT SEAL DISC

ORDER NO.	CLAMPING SIZE	ORDER NO.	CLAMPING SIZE
016-040	1.0 mm - 0.5 mm	016-004-I	1/16”
016-060	1.5 mm - 1.0 mm	016-008-I	1/8”
016-080	2.0 mm - 1.5 mm	016-012-I	3/16”
016-120	3.0 mm - 2.0 mm	016-016-I	1/4”
016-160	4.0 mm - 3.0 mm	016-020-I	5/16”
016-200	5.0 mm - 4.0 mm	016-024-I	3/8”
016-240	6.0 mm - 5.0 mm	–	–
016-280	7.0 mm - 6.0 mm	–	–
016-320	8.0 mm - 7.0 mm	–	–
016-360	9.0 mm - 8.0 mm	–	–
016-400	10.0 mm - 9.0 mm	–	–

ECX/ER16 3 µm/0.00012” HP+ SUPER ULTRA PRECISION COLLETS & COOLANT SEAL DISC

ORDER NO.	CLAMPING SIZE	ORDER NO.	CLAMPING SIZE
016-040 HPP	1.0 mm	016-004 HPP	1/16”
016-060 HPP	1.5 mm	016-008 HPP	1/8”
016-080 HPP	2.0 mm	016-012 HPP	3/16”
016-120 HPP	3.0 mm	016-016 HPP	1/4”
016-160 HPP	4.0 mm	016-020 HPP	5/16”
016-200 HPP	5.0 mm	016-024 HPP	3/8”
016-240 HPP	6.0 mm	–	–
016-280 HPP	7.0 mm	–	–
016-320 HPP	8.0 mm	–	–
016-360 HPP	9.0 mm	–	–
016-400 HPP	10.0 mm	–	–

ECX/ER32 5 µm/0.0002” ULTRA PRECISION COLLETS WITHOUT COOLANT SEAL DISC

ORDER NO.	CLAMPING SIZE	ORDER NO.	CLAMPING SIZE
032-120	3 mm - 2 mm	032-008-I	1/8”
032-160	4 mm - 3 mm	032-012-I	3/16”
032-200	5 mm - 4 mm	032-016-I	1/4”
032-240	6 mm - 5 mm	032-020-I	5/16”
032-280	7 mm - 6 mm	032-024-I	3/8”
032-320	8 mm - 7 mm	032-028-I	7/16”
032-360	9 mm - 8 mm	032-032-I	1/2”
032-400	10 mm - 9 mm	032-036-I	9/16”
032-440	11 mm - 10 mm	032-040-I	5/8”
032-480	12 mm - 11 mm	032-048-I	3/4”
032-520	13 mm - 12 mm	–	–
032-560	14 mm - 13 mm	–	–
032-600	15 mm - 14 mm	–	–
032-640	16 mm - 15 mm	–	–
032-680	17 mm - 16 mm	–	–
032-720	18 mm - 17 mm	–	–
032-760	19 mm - 18 mm	–	–
032-800	20 mm - 19 mm	–	–

ECX/ER32 3 µm/0.00012” HP+ SUPER ULTRA PRECISION COLLETS & COOLANT SEAL DISC

ORDER NO.	CLAMPING SIZE	ORDER NO.	CLAMPING SIZE
032-080 HPP	2 mm	032-008 HPP	1/8”
032-120 HPP	3 mm	032-012 HPP	3/16”
032-160 HPP	4 mm	032-016 HPP	1/4”
032-200 HPP	5 mm	032-020 HPP	5/16”
032-240 HPP	6 mm	032-024 HPP	3/8”
032-280 HPP	7 mm	032-028 HPP	7/16”
032-320 HPP	8 mm	032-032 HPP	1/2”
032-360 HPP	9 mm	032-036 HPP	9/16”
032-400 HPP	10 mm	032-040 HPP	5/8”
032-440 HPP	11 mm	032-048 HPP	3/4”
032-480 HPP	12 mm	–	–
032-520 HPP	13 mm	–	–
032-560 HPP	14 mm	–	–
032-600 HPP	15 mm	–	–
032-640 HPP	16 mm	–	–
032-680 HPP	17 mm	–	–
032-720 HPP	18 mm	–	–
032-760 HPP	19 mm	–	–
032-800 HPP	20 mm	–	–

NOTE: CP COLLET CHUCKS ONLY CLAMP AT THE HIGH RANGE OF THE COLLET.

CENTRO P CLAMPING NUTS - STANDARD

ORDER NO.	DESCRIPTION
016-000NCP	HPC16
032-000NCP	HPC32

CENTRO P CLAMPING NUTS FOR COOLANT SEAL DISC

ORDER NO.	DESCRIPTION
016-001NCP	HPC16D1
032-001NCP	HPC32D1

CENTRO P WRENCHES

ORDER NO.	DESCRIPTION
016-000WCP	SCHLGR24 x 3BCP16 PIN WRENCH
016-001WCP	R030 ROLLER BEARING WRENCH
032-000WCP	SCHLGR50 x 5BCP32 PIN WRENCH
032-001WCP	R050 ROLLER BEARING WRENCH

TECHLEADER® TOOLING INC.

ECX (ER) Superflex Precision Collet Chucks

Balanced

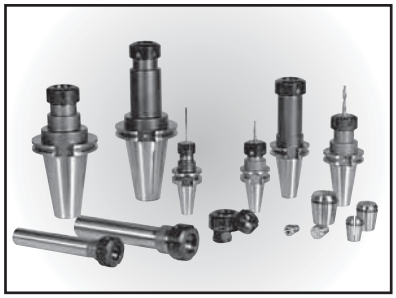

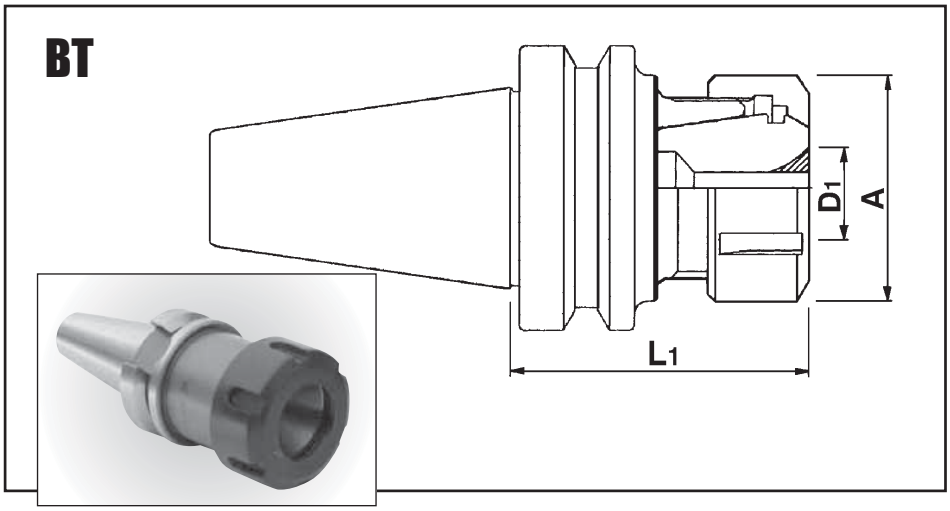

BT Flange Tools

For use with ECX style collets See pages 3-7 to 3-11 for collet information

Ask about our new ETS High-Precision Self-Centering collets to obtain the optimum accuracy from your ECX Collet Chucks

Our ECX collet chucks & extensions accept the following competitors collets: DR, ER, ESX, RD

For collet nuts and wrenches see pages 1-21 to 1-22 and 3-16 to 3-18

NUT STYLES
C = CASTALLETION
H = HEXAGON
M = MINI CASTALLETION

THEORETICAL MAX Tightening Torque for ECX nuts	
ECX 16	110 FT/lbs.
ECX 20	110 FT/lbs.
ECX 25	150 FT/lbs.
ECX 32	340 FT/lbs.
ECX 40	600 FT/lbs.

Taper	Order No.	Device Type	Collet Style	D_1 Collet Range (in)	L_1 (in)	A (in)	Max RPM	Nut Style
15	483-616*	BT15 – ECX16 – 2.36	ECX 16	0.020 - 0.394	2.36	1.10	–	H
30	483-416	BT30 – ECX16 – 2.50	ECX 16	0.020 - 0.394	2.50	1.10	30,000	H
30	483-417	BT30 – ECX16 – 4.00	ECX 16	0.020 - 0.394	4.00	1.10	25,000	H
30	483-420	BT30 – ECX20 – 2.50	ECX 20	0.020 - 0.512	2.50	1.25	25,000	C
30	483-425	BT30 – ECX25 – 2.00	ECX 25	0.020 - 0.629	2.00	1.654	25,000	C
30	483-432	BT30 – ECX32 – 3.00	ECX 32	0.080 - 0.787	3.00	1.97	20,000	C
40	483-111	BT40 – ECX11 – 2.50	ECX 11	0.020 - 0.276	2.50	0.629	20,000	M
40	483-112	BT40 – ECX11 – 4.00	ECX 11	0.020 - 0.276	4.00	0.629	20,000	M
40	483-116	BT40 – ECX16 – 2.50	ECX 16	0.020 - 0.394	2.50	1.10	20,000	H
40	483-117	BT40 – ECX16 – 4.00	ECX 16	0.020 - 0.394	4.00	1.10	15,000	H
40	483-118	BT40 – ECX16 – 6.00	ECX 16	0.020 - 0.394	6.00	1.10	15,000	H
40	483-120	BT40 – ECX20 – 3.00	ECX 20	0.020 - 0.512	3.00	1.25	20,000	H
40	483-121	BT40 – ECX20 – 5.00	ECX 20	0.020 - 0.512	5.00	1.25	15,000	H
40	483-122	BT40 – ECX20 – 6.00	ECX 20	0.020 - 0.512	6.00	1.25	15,000	H
40	483-125	BT40 – ECX25 – 3.00	ECX 25	0.020 - 0.629	3.00	1.654	20,000	C
40	483-126	BT40 – ECX25 – 5.00	ECX 25	0.020 - 0.629	5.00	1.654	15,000	C
40	483-127	BT40 – ECX25 – 6.00	ECX 25	0.020 - 0.629	6.00	1.654	15,000	C
40	483-132	BT40 – ECX32 – 3.00	ECX 32	0.080 - 0.787	3.00	1.97	20,000	C
40	483-133	BT40 – ECX32 – 5.00	ECX 32	0.080 - 0.787	5.00	1.97	15,000	C
40	483-140	BT40 – ECX40 – 3.50	ECX 40	0.118 - 1.023	3.50	2.48	15,000	C
50	483-316	BT50 – ECX16 – 4.00	ECX 16	0.020 - 0.394	4.00	1.10	–	H
50	483-317	BT50 – ECX16 – 6.00	ECX 16	0.020 - 0.394	6.00	1.10	–	H
50	483-320	BT50 – ECX20 – 4.00	ECX 20	0.020 - 0.512	4.00	1.25	–	H
50	483-321	BT50 – ECX20 – 6.00	ECX 20	0.020 - 0.512	6.00	1.25	–	H
50	483-332	BT50 – ECX32 – 4.00	ECX 32	0.080 - 0.787	4.00	1.97	–	C
50	483-333	BT50 – ECX32 – 6.00	ECX 32	0.080 - 0.787	6.00	1.97	–	C
50	483-340	BT50 – ECX40 – 4.00	ECX 40	0.118 - 1.023	4.00	2.48	–	C
50	483-341	BT50 – ECX40 – 6.00	ECX 40	0.118 - 1.023	6.00	2.48	–	C

* While stock lasts

NOTE: Achieving maximum rotation speed depends on the concentricity and symmetry of the cutting tool and the complete tool assembly.

TECHLEADER® TOOLING INC.

ECX (ER) Superflex Precision Collet Chucks

Balanced

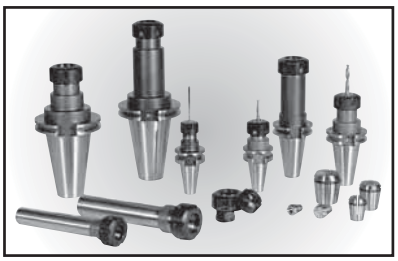

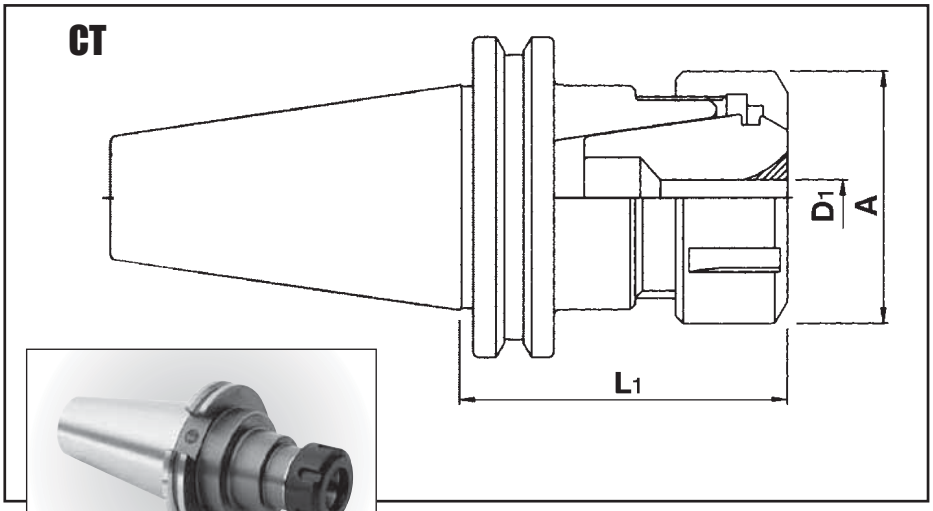

CT Flange Tools

For use with ECX style collet See pages 3-7 to 3-11 for collet information

Ask about our new ETS High-Precision Self-Centering collets to obtain the optimum accuracy from your ECX Collet Chucks

Our ECX collet chucks & extensions accept the following competitors collets: DR, ER, ESX, RD

For collet nuts and wrenches see pages 1-21 to 1-22 and 3-16 to 3-18

NUT STYLES
C = CASTALLETION
H = HEXAGON
M = MINI CASTALLETION

THEORETICAL MAX Tightening Torque for ECX nuts	
ECX 16	110 FT/lbs.
ECX 20	110 FT/lbs.
ECX 25	150 FT/lbs.
ECX 32	340 FT/lbs.
ECX 40	600 FT/lbs.

Taper	Order No.	Device Type	Collet Style	D_1 Collet Range (in)	L_1 (in)	A (in)	Max RPM	Nut Style
40	484-111	CT40 – ECX11 – 2.50	ECX 11	0.020 - 0.276	2.50	0.629	20,000	M
40	484-112	CT40 – ECX11 – 4.00	ECX 11	0.020 - 0.276	4.00	0.629	20,000	M
40	484-116	CT40 – ECX16 – 2.50	ECX 16	0.020 - 0.394	2.50	1.10	20,000	H
40	484-117	CT40 – ECX16 – 4.00	ECX 16	0.020 - 0.394	4.00	1.10	15,000	H
40	484-118	CT40 – ECX16 – 6.00	ECX 16	0.020 - 0.394	6.00	1.10	15,000	H
40	484-119	CT40 – ECX16 – 8.00	ECX 16	0.020 - 0.394	8.00	1.10	12,000	H
40	484-120	CT40 – ECX20 – 3.00	ECX 20	0.020 - 0.512	3.00	1.25	20,000	H
40	484-121	CT40 – ECX20 – 5.00	ECX 20	0.020 - 0.512	5.00	1.25	15,000	H
40	484-122	CT40 – ECX20 – 6.00	ECX 20	0.020 - 0.512	6.00	1.25	15,000	H
40	484-125	CT40 – ECX25 – 3.00	ECX 25	0.020 - 0.629	3.00	1.654	20,000	C
40	484-126	CT40 – ECX25 – 5.00	ECX 25	0.020 - 0.629	5.00	1.654	15,000	C
40	484-127	CT40 – ECX25 – 6.00	ECX 25	0.020 - 0.629	6.00	1.654	15,000	C
40	484-132	CT40 – ECX32 – 3.00	ECX 32	0.080 - 0.787	3.00	1.97	20,000	C
40	484-133	CT40 – ECX32 – 5.00	ECX 32	0.080 - 0.787	5.00	1.97	12,000	C
40	484-140	CT40 – ECX40 – 3.50	ECX 40	0.118 - 1.023	3.50	2.48	12,000	C
50	484-316	CT50 – ECX16 – 4.00	ECX 16	0.020 - 0.394	4.00	1.10	12,000	H
50	484-317	CT50 – ECX16 – 6.00	ECX 16	0.020 - 0.394	6.00	1.10	12,000	H
50	484-318	CT50 – ECX16 – 8.00	ECX 16	0.020 - 0.394	8.00	1.10	12,000	H
50	484-320	CT50 – ECX20 – 4.00	ECX 20	0.020 - 0.512	4.00	1.25	12,000	H
50	484-321	CT50 – ECX20 – 6.00	ECX 20	0.020 - 0.512	6.00	1.25	12,000	H
50	484-322	CT50 – ECX20 – 8.00	ECX 20	0.020 - 0.512	8.00	1.25	12,000	H
50	484-325	CT50 – ECX25 – 4.00	ECX 25	0.020 - 0.629	4.00	1.654	12,000	C
50	484-326	CT50 – ECX25 – 6.00	ECX 25	0.020 - 0.629	6.00	1.654	12,000	C
50	484-332	CT50 – ECX32 – 4.00	ECX 32	0.080 - 0.787	4.00	1.97	12,000	C
50	484-333	CT50 – ECX32 – 6.00	ECX 32	0.080 - 0.787	6.00	1.97	12,000	C
50	484-334	CT50 – ECX32 – 8.00	ECX 32	0.080 - 0.787	8.00	1.97	12,000	C
50	484-340	CT50 – ECX40 – 4.00	ECX 40	0.118 - 1.023	4.00	2.48	12,000	C
50	484-341	CT50 – ECX40 – 6.00	ECX 40	0.118 - 1.023	6.00	2.48	10,000	C

NOTE: Achieving maximum rotation speed depends on the concentricity and symmetry of the cutting tool and the complete tool assembly.

TECHLEADER® TOOLING INC.

ECX (ER) Superflex Precision Collet Chucks

DIN 69871-Form B - Coolant Through The Flange

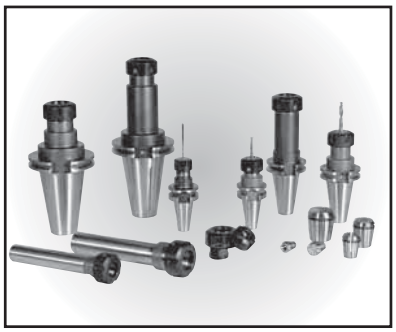

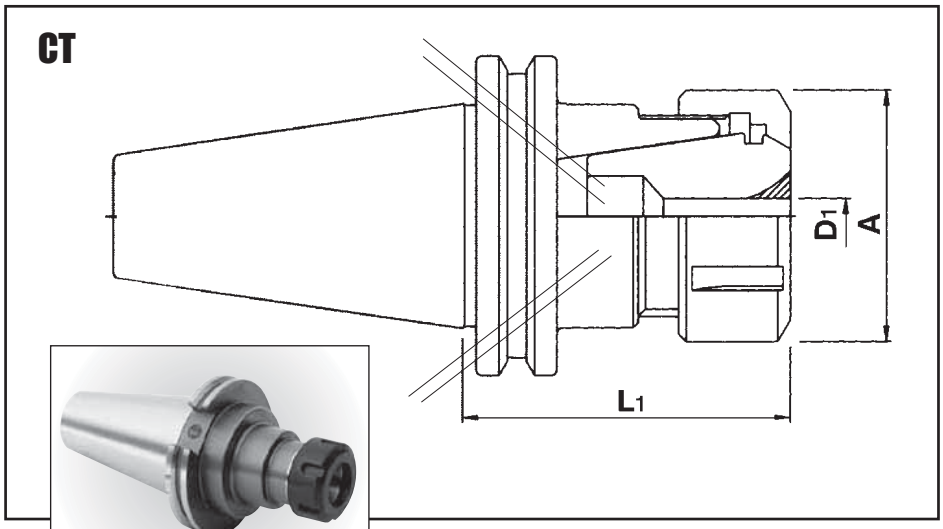

CT Flange Tools

For use with ECX style collet
See pages 3-13 to 3-15
for collet information

For collet nuts and wrenches see pages 1-21 to 1-22 and 3-16 to 3-18

CT Taper

Taper	Order No.	Device Type	Collet Style	D_1 Collet Range (in)	L_1 (in)	A (in)	Max RPM	Nut Style
40	484-216-D	CT40D-ECX16-2.50	ECX 16	0.020 -0-394	2.50	1.10	20,000	H
40	484-217-D	CT40D-ECX16-4.00	ECX 16	0.020 -0-394	4.00	1.10	15,000	H
40	484-218-D	CT40D-ECX16-6.00	ECX 16	0.020 -0-394	6.00	1.10	15,000	H
40	484-220-D	CT40D-ECX20-3.00	ECX 20	0.020 -0.512	3.00	1.25	20,000	H
40	484-221-D	CT40D-ECX20-5.00	ECX 20	0.020-0.512	5.00	1.25	15,000	H
40	484-225-D	CT40D-ECX25-3.00	ECX 25	0.020-0.629	3.00	1.654	20,000	C
40	484-226-D	CT40D-ECX25-5.00	ECX 25	0.020-0.629	5.00	1.654	15,000	C
40	484-232-D	CT40D-ECX32-3.00	ECX 32	0.080-0.787	3.00	1.97	20,000	C
40	484-233-D	CT40D-ECX32-5.00	ECX 32	0.080-0.787	5.00	1.97	15,000	C
40	484-240-D	CT40D-ECX40-3.50	ECX 40	0.118-1.023	3.50	2.48	15,000	C
50	484-416-D	CT50D-ECX16-4.00	ECX 16	0.020-0.394	4.00	1.10	12,000	H
50	484-417-D	CT50D-ECX16-6.00	ECX 16	0.020-0.394	6.00	1.10	12,000	H
50	484-420-D	CT50D-ECX20-4.00	ECX 20	0.020-0.512	4.00	1.25	12,000	H
50	484-421-D	CT50D-ECX20-6.00	ECX 20	0.020-0.512	6.00	1.25	12,000	H
50	484-425-D	CT50D-ECX25-4.00	ECX 25	0.020-0.625	4.00	1.654	12,000	C
50	484-426-D	CT50D-ECX25-6.00	ECX 25	0.020-0.625	6.00	1.654	12,000	C
50	484-432-D	CT50D-ECX32-4.00	ECX 32	0.080-0.787	4.00	1.97	12,000	C
50	484-433-D	CT50D-ECX32-6.00	ECX 32	0.080-0.787	6.00	1.97	12,000	C
50	484-440-D	CT50D-ECX40-4.00	ECX 40	0.118-1.023	4.00	2.48	12,000	C
50	484-441-D	CT50D-ECX40-6.00	ECX 40	0.118-1.023	6.00	2.48	12,000	C

NOTE: Achieving maximum rotation speed depends on the concentricity and symmetry of the cutting tool and the complete tool assembly.

NUT STYLES

C = CASTALLETION
H = HEXAGON
M = MINI CASTALLETION

THEORETICAL MAX
Tightening Torque for ECX nuts

ECX 16	110 FT/lbs.
ECX 20	110 FT/lbs.
ECX 25	150 FT/lbs.
ECX 32	340 FT/lbs.
ECX 40	600 FT/lbs.

TECHLEADER® TOOLING INC.

NMTB - ECX (ER) Superflex Precision Collet Chucks

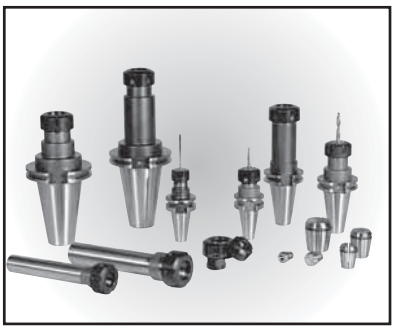

NMTB Flange Tools

NMTB chuck flanges are qualified for use with Erickson QC spindles

Our ECX collet chucks & extensions accept the following competitors collets:

DR, ER, ESX, RD For use with ECX style collet See pages 3-7 to 3-11 for collet information

For collet nuts and wrenches see pages 1-21 to 1-22 and 3-16 to 3-18

NUT STYLES

C = CASTALLETION
H = HEXAGON
M = MINI CASTALLETION

ECX (ER) Superflex Precision Extensions

THEORETICAL MAX Tightening Torque for ECX nuts

ECX 16	110 FT/lbs.
ECX 20	110 FT/lbs.
ECX 25	150 FT/lbs.
ECX 32	340 FT/lbs.
ECX 40	600 FT/lbs.

NMTB

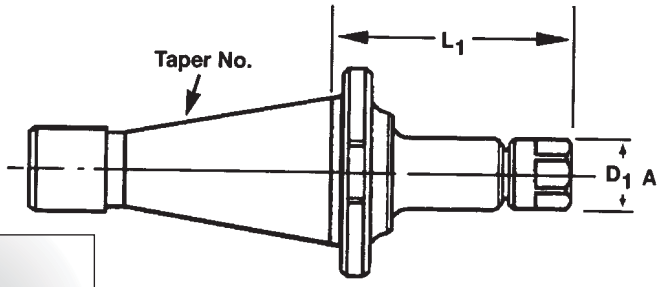

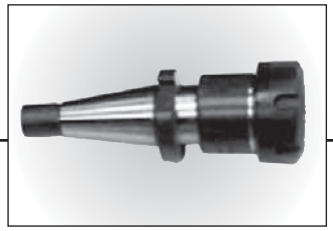

Taper	Order No.	Device Type	D_1 (in)	L_1 (in)	A (in)	Nut Style
30	684-016	NMTB30QC – ECX 16-1.75	0.020 – 0.394	1.75	1.10	H
30	684-017	NMTB30QC – ECX 16-4.00	0.020 – 0.394	4.00	1.10	H
30	684-020	NMTB30QC – ECX 20-2.50	0.020 – 0.512	2.50	1.25	H
30	684-032	NMTB30QC – ECX 32-3.00	0.080 – 0.787	3.00	1.97	C
40	684-216	NMTB40QC – ECX 16-1.75	0.020 – 0.394	1.75	1.10	C
40	684-217	NMTB40QC – ECX 16-4.00	0.020 – 0.394	4.00	1.10	C
40	684-220	NMTB40QC – ECX 20-3.00	0.020 – 0.512	3.00	1.25	C
40	684-232	NMTB40QC – ECX 32-3.00	0.080 – 0.787	3.00	1.97	C
40	684-240	NMTB40QC – ECX 40-3.00	0.118 – 1.023	3.00	2.48	C
50	684-416	NMTB50QC – ECX 16-4.00	0.020 – 0.394	4.00	1.10	C
50	684-432	NMTB50QC – ECX 32-4.00	0.080 – 0.787	4.00	1.97	C
50	684-440	NMTB50QC – ECX 40-4.00	0.118 – 1.023	4.00	2.48	C

STRAIGHT SHANK

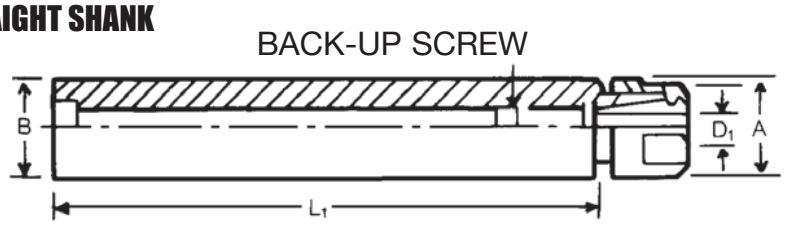

Order No.	Device Type	B (in)	L_1 (in)	Collet Range D_1 (in)	A (in)	Nut Style
011-000	ECX11 EXTENSION	0.500	6.555	0.020-0.275	0.629	M
016-000	ECX16 EXTENSION	0.750	5.500	0.020-0.394	1.100	H
016-005	ECX16 EXTENSION	0.750	7.000	0.020-0.394	0.866	M
021-000	ECX20 EXTENSION	1.000	5.510	0.020-0.512	1.250	H
021-001	ECX20 EXTENSION	1.000	7.200	0.020-0.512	1.102	M
025-000	ECX25 EXTENSION	1.000	5.700	0.020-0.630	1.654	C
032-000	ECX32 EXTENSION	1.250	5.700	0.079-0.787	1.969	C
040-000	ECX40 EXTENSION	1.000	1.970	0.118-1.023	2.480	C
040-001	ECX40 EXTENSION	1.250	2.375	0.118-1.023	2.480	C
040-002	ECX40 EXTENSION	1.500	5.510	0.118-1.023	2.480	C

TECHLEADER® TOOLING INC.

ECX (ER) Superflex Collet Chucks

HSK-A Flange Tools

For use with ECX style collet See pages 3-7 to 3-11 for collet information

For collet nuts and wrenches see pages 1-21 to 1-22 and 3-16 to 3-18

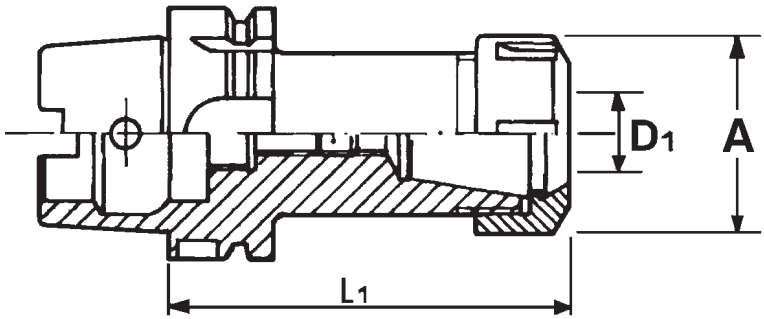

Fig.1

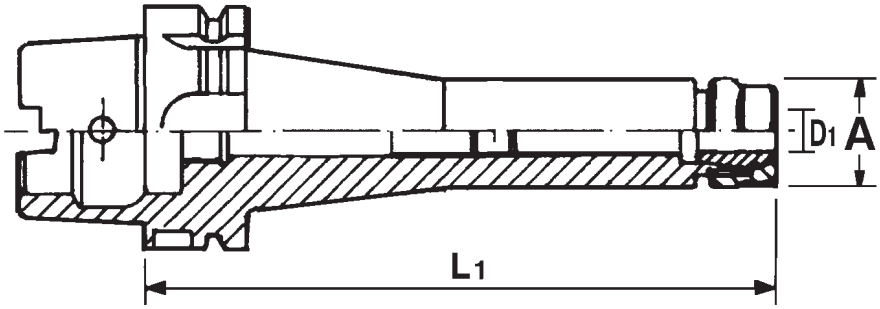

Fig.2

Taper	Order No.	Device Type	Fig #	Collet Style	D_1 Collet Range (in)	L_1 (in)	A (in)	Max RPM	Nut Style
63	584-516A	HSK63A-ECX16-3.00	1	ECX16	0.020-0.394	3.00	1.100	20,000	H
63	584-517A	HSK63A-ECX16-5.00	2	ECX16	0.020-0.394	5.00	1.100	15,000	H
63	584-520A	HSK63A-ECX20-3.00	1	ECX20	0.020-0.512	3.00	1.250	20,000	H
63	584-521A	HSK63A-ECX20-5.00	2	ECX20	0.020-0.512	5.00	1.250	15,000	H
63	584-525A	HSK63A-ECX25-3.00	1	ECX25	0.020-0.629	3.00	1.654	20,000	C
63	584-526A	HSK63A-ECX25-5.00	2	ECX25	0.020-0.629	5.00	1.654	15,000	C
63	584-532A	HSK63A-ECX32-4.00	1	ECX32	0.080-0.787	4.00	1.970	15,000	C
63	584-533A	HSK63A-ECX32-6.00	1	ECX32	0.080-0.787	6.00	1.100	12,000	C
63	584-540A	HSK63A-ECX40-4.00	1	ECX40	0.118-1.023	4.00	2.480	15,000	C
63	584-541A	HSK63A-ECX40-6.00	1	ECX40	0.118-1.023	6.00	2.480	12,000	C

NOTE: Achieving maximum rotation speed depends on the concentricity and symmetry of the cutting tool and the complete tool assembly.

NUT STYLES

C = CASTALLETION
H = HEXAGON
M = MINI CASTALLETION

THEORETICAL MAX Tightening Torque for ECX nuts

ECX 16	110 FT/lbs.
ECX 20	110 FT/lbs.
ECX 25	150 FT/lbs.
ECX 32	340 FT/lbs.
ECX 40	600 FT/lbs.

TECHLEADER® TOOLING INC.

ECX (ER) Superflex Collet Chucks

HSK-E Flange Tools

For use with ECX style collet.
See pages 3-7 to 3-11 for collet information
For collet nuts and wrenches see pages 1-21 to 1-22 and 3-16 to 3-18

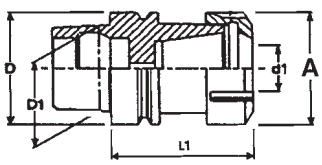

Fig.1

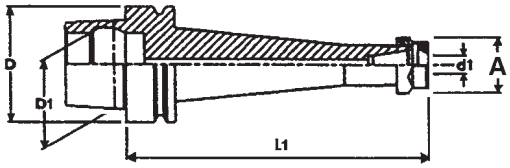

Fig.2

Taper	Order No.	Device Type	Fig #	Collet Style	D_1 Collet Range (in)	L_1 (in)	A (in)	Max RPM	Nut Style
40E	584-311E	HSK40E-ECX11-100	2	ECX(ER)11	0.020 -0.275	3.940	0.748	30,000	M
40E	584-316E	HSK40E-ECX16-100	2	ECX(ER)16	0.020 -0.394	3.940	1.250	30,000	C
40E	584-325E	HSK40E-ECX25-50	1	ECX(ER)25	0.020 -0.629	1.970	1.654	25,000	C
40E	584-326E	HSK40E-ECX25-75	1	ECX(ER)25	0.020 -0.629	2.950	1.654	25,000	C
40E	584-327E	HSK40E-ECX25-100	1	ECX(ER)25	0.020 -0.629	3.940	1.654	25,000	C
50E	584-411E	HSK50E-ECX11-100	2	ECX(ER)11	0.020 -0.275	3.940	0.748	30,000	M
50E	584-412E	HSK50E-ECX11-160	2	ECX(ER)11	0.020 -0.275	6.299	0.748	20,000	M
50E	584-416E	HSK50E-ECX16-75	1	ECX(ER)16	0.020 -0.394	2.950	1.250	30,000	C
50E	584-417E	HSK50E-ECX16-100	2	ECX(ER)16	0.020 -0.394	3.940	1.250	30,000	C
50E	584-418E	HSK50E-ECX16-160	2	ECX(ER)16	0.020 -0.394	6.299	1.250	20,000	C
50E	584-420E	HSK50E-ECX20-75	1	ECX(ER)20	0.020 -0.512	2.950	1.378	30,000	C
50E	584-421E	HSK50E-ECX20-100	2	ECX(ER)20	0.020 -0.512	3.940	1.378	20,000	C
50E	584-425E	HSK50E-ECX25-75	1	ECX(ER)25	0.020 -0.629	2.950	1.654	25,000	C
50E	584-432E	HSK50E-ECX32-75	1	ECX(ER)32	0.080 -0.787	2.950	1.969	25,000	C
50E	584-433E	HSK50E-ECX32-100	1	ECX(ER)32	0.080 -0.787	3.940	1.969	25,000	C

NOTE: Achieving maximum rotation speed depends on the concentricity and symmetry of the cutting tool and the complete tool assembly.

NUT STYLES
C = CASTALLETION
H = HEXAGON
M = MINI CASTALLETION

THEORETICAL MAX Tightening Torque for ECX nuts	
ECX 16	110 FT/lbs.
ECX 20	110 FT/lbs.
ECX 25	150 FT/lbs.
ECX 32	340 FT/lbs.
ECX 40	600 FT/lbs.

DC Slim Cylindrical Shank Extensions & Collets (for End Mills)

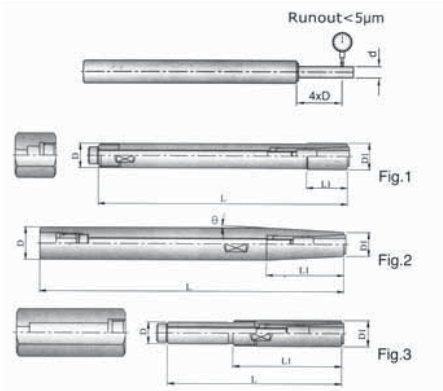

Order No.	Device Type	Fig.	d	L	L1	D	D1	O	Collet	Spanner
460-062	ST10-DC6-80	3	2 ~ 6	80	50	10	13	–	DC6	30194-642 (M4)
460-063	ST12-DC6-120	1		120	20	12	13	–		30194-642 (M4)
460-064	ST16-DC6-150	2		150	38	16	13	3"		30194-642 (M4)
460-065	ST20-DC6-200	2		200	70	20	13	3"		30194-642 (M4)

DC Collets for End Mills

The design of DC-E Collets is emphasiezed on increase the clamping force of end mills

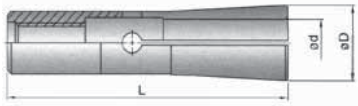

	L	øD
DC-4	31	7
DC-6	36	9.6
DC-8	45	15
DC-10	52	19.1
DC-12	60	22

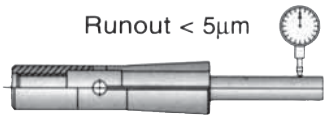

Order No.	Device Type	d
460-105	DC6-3E	3 mm
460-106	DC6-3.175E	1/8"
460-107	DC6-4E	4 mm
460-108	DC6-6E	6 mm
460-109	DC6-6.35E	1/4"

TECHLEADER® TOOLING INC.

Nuts For TG, Double Angle & ECX Collet Chucks

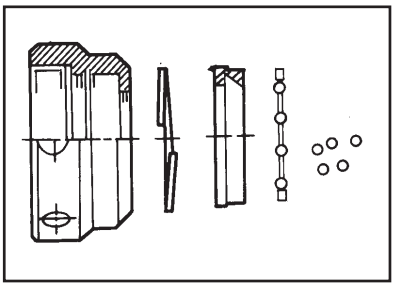

TG

Chuck Type	Order No.	Description
TG75	499-TG75N	COMPLETE NUT ASSEMBLY
TG75	499TG75NB	BALANCED NUT ASSEMBLY FOR BALANCE HOLDERS
TG75	499TG75NO	NUT ONLY
TG75	499TG75SR	SNAP RING
TG75	499TG75TR	THRUST RING
TG75	499-TG75B	SET OF STEEL BALLS
TG100	499-TG100N	COMPLETE NUT ASSEMBLY
TG100	499TG100NB	BALANCED NUT ASSEMBLY FOR BALANCE HOLDERS
TG100	499TG100NO	NUT ONLY OLD STYLE
TG100	499TG100SR	SNAP RING OLD STYLE
TG100	499TG101SR	SNAP RING NEW STYLE
TG100	499TG101NO	NUT ONLY NEW STYLE
TG100	499TG100TR	THRUST RING
TG100	499-TG100B	SET OF STEEL BALLS
TG150	499-TG150N	COMPLETE NUT ASSEMBLY
TG150	499TG150NO	NUT ONLY
TG150	499TG150SR	SNAP RING
TG150	499TG150TR	THRUST RING
TG150	499-TG150B	SET OF STEEL BALLS

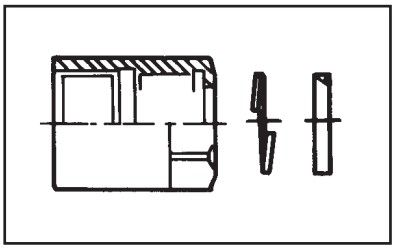

Double Angle

Chuck Type	Order No.	Description
C100	499-C100N	COMPLETE NUT ASSEMBLY
C100	499-C100NO	NUT ONLY
C100	499-C100SR	SNAP RING
C100	499-C100TR	THRUST RING
C180	499-C180N	COMPLETE NUT ASSEMBLY
C180	499-C180NO	NUT ONLY
C180	499-C180SR	SNAP RING
C180	499-C180TR	THRUST RING
C200	499-C200N	COMPLETE NUT ASSEMBLY
C200	499-C200NO	NUT ONLY
C200	499-C200SR	SNAP RING
C200	499-C200TR	THRUST RING
C300	499-C300N	COMPLETE NUT ASSEMBLY
C300	499-C300NO	NUT ONLY
C300	499-C300SR	SNAP RING
C300	499-C300TR	THRUST RING

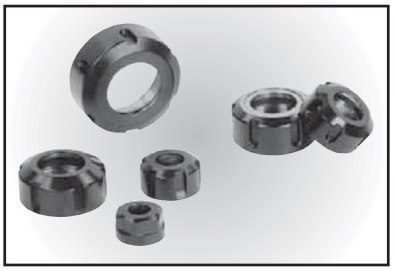

ECX

Chuck Type	Order No.	Description
ECX11	011-000-NM	COMPLETE NUT (M)
ECX16	016-000-NH	COMPLETE NUT (H)
ECX16	016-000-NHC	COMPLETE NUT (H)
ECX20	021-000-NC	COMPLETE NUT (C)
ECX20	021-000-NH	COMPLETE NUT (H)
ECX20	021-000-NHC	COMPLETE NUT (H)
ECX25	025-000-NC	COMPLETE NUT (C)
ECX25	025-000-NCC	COMPLETE NUT (C)
ECX32	032-000-NC	COMPLETE NUT (C)
ECX32	032-000-NCC	COMPLETE NUT (C)
ECX40	040-000-NC	COMPLETE NUT (C)
ECX40	040-000-NCC	COMPLETE NUT (C)

C = Castalletion, H = Hexagon, M = Mini Castalletion

Spanners & Parts for TG, Double Angle & ECX Collet Chucks

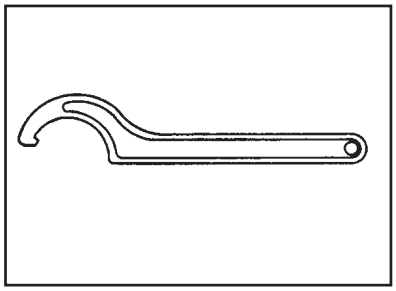

Spanners for CTR ACE LOCK Milling Chucks

CHUCK SIZE	ORDER NO.
3/4”	499-FS55
1”	499-FS62
1-1/4”	499-FS75

BAL = Balanced Nut

Spanners for TG Collet Chucks

CHUCK SIZE	ORDER NO.
TG75	499-TG75S
TG100 (STD)	499-TG100S
TG100 (BAL)	040-000-WC
TG150	499-TG150S

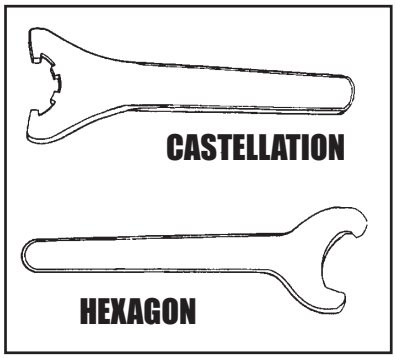

Spanners for ECX Collet Chucks

CHUCK SIZE	ORDER NO.	DESCRIPTION
ECX16	016-000-WH	SPANNER (H)
ECX16	016-000-WC	SPANNER (C)
ECX16HS	016-000-HSW	SPANNER (HS)
ECX 20	021-000-WC	SPANNER C)
ECX 20	021-000-WH	SPANNER (H)
ECX 25	025-000-W	SPANNER (C)
ECX 32	032-000-W	SPANNER (C)
ECX 40	040-000-W	SPANNER (C)

C = Castalletion
H = Hexagon
HS = High Speed

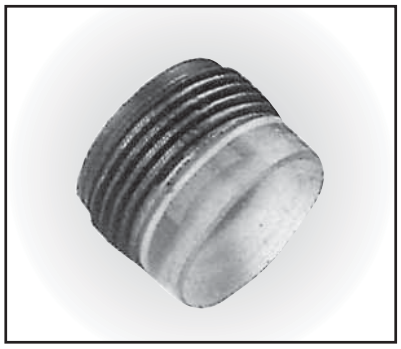

Sealed Back Up Screws for ECX Collet Chucks

CHUCK SIZE	ORDER NO.	DESCRIPTION
ECX 16	499-SBS 16	M10 x 1.5 PLH
ECX 20	499-SBS 20	M12 x 1.5 PLH
ECX 32	499-SBS 32	M22 x 1.5 PLH
ECX 40	499-SBS 40	M28 x 1.5 PLH

TECHLEADER® TOOLING INC.

End Mill Holders - Inch

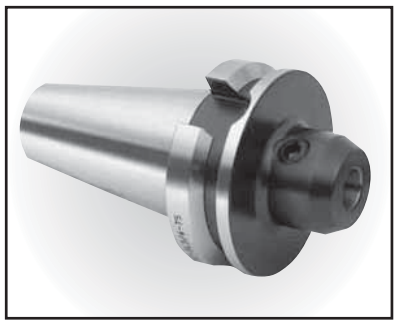

BT Flange Tools

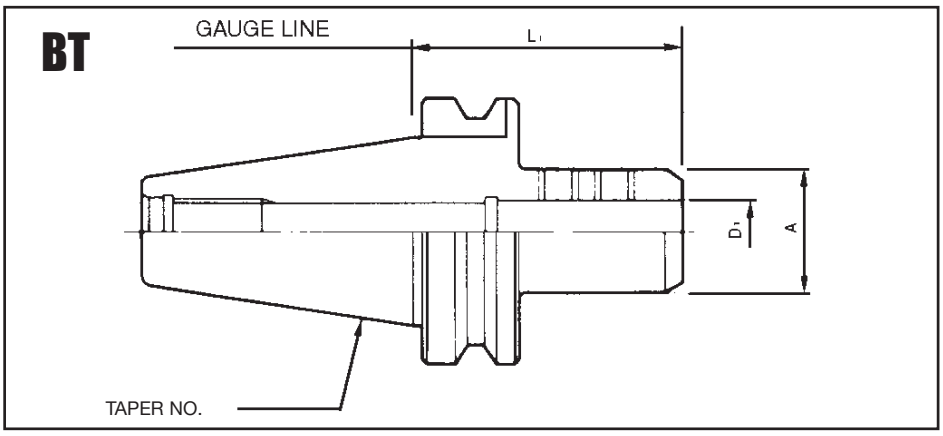

Taper	Order No.	Device Type	D_1 (in)	L_1 (in)	A (in)
30	477-400	BT30-SL 1/8-60	0.125	2.36	0.75
30	477-401	BT30-SL 1/8-105	0.125	4.13	0.75
30	477-405	BT30-SL 3/16-60	0.1875	2.36	0.75
30	477-406	BT30-SL 3/16-105	0.1875	4.13	0.75
30	477-410	BT30-SL 1/4-60	0.250	2.36	0.81
30	477-411	BT30-SL 1/4-105	0.250	4.13	0.81
30	477-415	BT30-SL 5/16-60	0.3125	2.36	1.00
30	477-416	BT30-SL 5/16-105	0.3125	4.13	1.00
30	477-420	BT30-SL 3/8-60	0.375	2.36	1.00
30	477-421	BT30-SL 3/8-105	0.375	4.13	1.00
30	477-425	BT30-SL 1/2-60	0.500	2.36	1.25
30	477-426	BT30-SL 1/2-105	0.500	4.13	1.25
30	477-430	BT30-SL 5/8-60	0.625	2.36	1.50
30	477-431	BT30-SL 5/8-105	0.625	4.13	1.50
30	477-435	BT30-SL 3/4-60	0.750	2.36	1.75
30	477-436	BT30-SL 3/4-105	0.750	4.13	1.75
40	477-100	BT40-SL 1/8-65	0.125	2.55	0.75
40	477-101	BT40-SL 1/8-101.6	0.125	4.00	0.75
40	477-105	BT40-SL 3/16-65	0.1875	2.55	0.75
40	477-106	BT40-SL 3/16-101.6	0.1875	4.00	0.75
40	477-110	BT40-SL 1/4-65	0.250	2.55	0.81
40	477-111	BT40-SL 1/4-101.6	0.250	4.00	0.81
40	477-115	BT40-SL 5/16-65	0.3125	2.55	1.00
40	477-116	BT40-SL 5/16-101.6	0.3125	4.00	1.00
40	477-120	BT40-SL 3/8-65	0.375	2.55	1.00
40	477-121	BT40-SL 3/8-101.6	0.375	4.00	1.00
40	477-123	BT40-SL 7/16-65	0.4375	2.55	1.15
40	477-125-S	BT40-SL 1/2-44.45	0.500	1.75	1.25
40	477-125	BT40-SL 1/2-65	0.500	2.55	1.25
40	477-126	BT40-SL 1/2-101.6	0.500	4.00	1.25
40	477-130-S	BT40-SL 5/8-44.45	0.625	1.75	1.50
40	477-130	BT40-SL 5/8-65	0.625	2.55	1.50

Taper	Order No.	Device Type	D_1 (in)	L_1 (in)	A (in)
40	477-131	BT40-SL 5/8-101.6	0.625	4.00	1.50
40	477-135-S	BT40-SL 3/4-44.45	0.750	1.75	1.75
40	477-135	BT40-SL 3/4-65	0.750	2.55	1.75
40	477-136	BT40-SL 3/4-101.6	0.750	4.00	1.75
40	477-140	BT40-SL 7/8-85	0.875	3.35	2.00
40	477-141	BT40-SL 7/8-101.6	0.875	4.00	2.00
40	477-145-S	BT40-SL 1-44.45	1.000	1.75	2.25
40	477-145	BT40-SL 1-95	1.000	3.74	2.25
40	477-146	BT40-SL 1-127	1.000	5.00	2.25
40	477-150-S	BT40-SL 1-1/4-50.8	1.250	2.00	2.50
40	477-150	BT40-SL 1-1/4-85	1.250	3.35	2.50
40	477-151	BT40-SL 1-1/4-127	1.250	5.00	2.50
40	477-155	BT40-SL 1-1/2-110	1.500	4.33	2.75
45	477-220*	BT45-SL 3/8-75	0.375	2.95	1.00
45	477-255*	BT45-SL 1-1/2-110	1.500	4.33	2.75
45	477-260*	BT45-SL 2-145	2.000	5.71	3.75
50	477-310	BT50-SL 1/4-75	0.250	2.95	0.81
50	477-320	BT50-SL 3/8-75	0.375	2.95	1.00
50	477-321	BT50-SL 3/8-152.4	0.375	6.00	1.00
50	477-325	BT50-SL 1/2-75	0.500	2.95	1.25
50	477-326	BT50-SL 1/2-152.4	0.500	6.00	1.25
50	477-330	BT50-SL 5/8-75	0.625	2.95	1.50
50	477-331	BT50-SL 5/8-152.4	0.625	6.00	1.50
50	477-335	BT50-SL 3/4-75	0.750	2.95	1.75
50	477-336	BT50-SL 3/4-152.4	0.750	6.00	1.75
50	477-340	BT50-SL 7/8-90	0.875	3.54	2.00
50	477-341	BT50-SL 7/8-152.4	0.875	6.00	2.00
50	477-345	BT50-SL 1-105	1.000	4.13	2.25
50	477-346	BT50-SL 1-152.4	1.000	6.00	2.25
50	477-350	BT50-SL 1-1/4-105	1.250	4.13	2.50
50	477-351	BT50-SL 1-1/4-152.4	1.250	6.00	2.50
50	477-355	BT50-SL 1-1/2-105	1.500	4.13	2.75
50	477-356	BT50-SL 1-1/2-152.4	1.500	6.00	2.75
50	477-360**	BT50-SL 2-135	2.000	5.31	3.75
50	477-361**	BT50-SL 2-152.4	2.000	6.00	3.75

** While stock is still available. ** Not Balanced.*

TECHLEADER® TOOLING INC.

End Mill Holders - Inch Balanced - G2.5

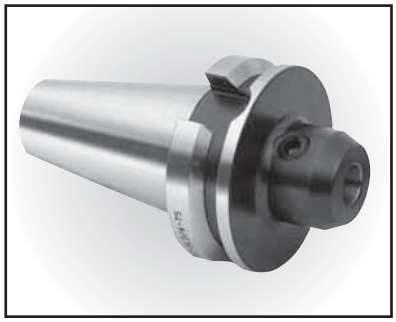

BT Flange Tools

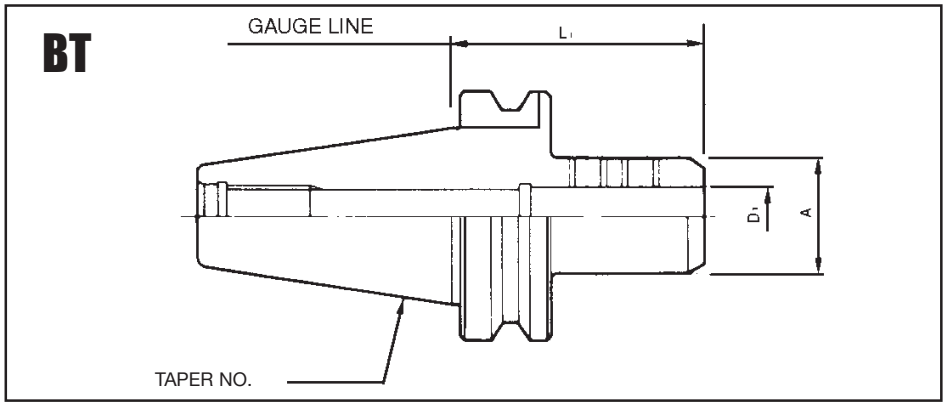

Taper	Order No.	Device Type	D_1 (in)	L_1 (in)	A (in)	Max RPM
30	477-000-B	BT30B-SL 1/8 - 60	0.125	2.36	0.75	20,000
30	477-005-B	BT30B-SL 3/16 - 60	0.1875	2.36	0.75	20,000
30	477-010-B	BT30B-SL 1/4 - 60	0.250	2.36	0.81	20,000
30	477-015-B	BT30B-SL 5/16 - 60	0.3175	2.36	1.00	20,000
30	477-020-B	BT30B-SL 3/8 - 60	0.375	2.36	1.00	20,000
30	477-025-B	BT30B-SL 1/2 - 60	0.500	2.36	1.25	15,000
30	477-030-B	BT30B-SL 5/8 - 60	0.625	2.36	1.50	15,000
30	477-040-B	BT30B-SL 3/4 - 60	0.750	2.36	1.75	15,000
40	477-200-B	BT40B-SL 1/8 - 65	0.125	2.55	0.75	20,000
40	477-201-B	BT40B-SL 1/8 - 101.6	0.125	4.00	0.75	15,000
40	477-205-B	BT40B-SL 3/16 - 65	0.1875	2.55	0.75	20,000
40	477-206-B	BT40B-SL 3/16 - 101.6	0.1875	4.00	0.75	15,000
40	477-210-B	BT40B-SL 1/4 - 65	0.250	2.55	0.81	20,000
40	477-211-B	BT40B-SL 1/4 - 101.6	0.250	4.00	0.81	15,000
40	477-215-B	BT40B-SL 5/16 - 65	0.3125	2.55	1.00	20,000
40	477-216-B	BT40B-SL 5/16 - 101.6	0.3125	4.00	1.00	15,000
40	477-220-B	BT40B-SL 3/8 - 65	0.375	2.55	1.00	20,000
40	477-221-B	BT40B-SL 3/8 - 101.6	0.375	4.00	1.00	15,000
40	477-225-B	BT40B-SL 1/2 - 44.45	0.500	1.75	1.25	20,000
40	477-226-B	BT40B-SL 1/2 - 65	0.500	2.55	1.25	15,000
40	477-227-B	BT40B-SL 1/2 - 101.6	0.500	4.00	1.25	15,000
40	477-230-B	BT40B-SL 5/8 - 44.45	0.625	1.75	1.50	20,000
40	477-231-B	BT40B-SL 5/8 - 65	0.625	2.55	1.50	15,000
40	477-232-B	BT40B-SL 5/8 - 101.6	0.625	4.00	1.50	15,000
40	477-235-B	BT40B-SL 3/4 - 44.45	0.750	1.75	1.75	15,000
40	477-236-B	BT40B-SL 3/4 - 65	0.750	2.55	1.75	12,000
40	477-237-B	BT40B-SL 3/4 - 101.6	0.750	4.00	1.75	12,000
40	477-240-B	BT40B-SL 7/8 - 85	0.875	3.35	2.00	12,000
40	477-241-B	BT40B-SL 7/8 - 101.6	0.875	4.00	2.00	12,000
40	477-245-B	BT40B-SL 1 - 44.45	1.000	1.75	2.25	15,000
40	477-246-B	BT40B-SL 1 - 95	1.000	3.74	2.25	12,000
40	477-247-B	BT40B-SL 1 - 127	1.000	5.00	2.25	12,000
40	477-250-B	BT40B-SL 1-1/4 - 50.8	1.250	2.00	2.50	10,000
40	477-251-B	BT40B-SL 1-1/4 - 85	1.250	3.35	2.50	10,000
40	477-252-B	BT40B-SL 1-1/4 - 127	1.250	5.00	2.50	8,000

NOTE: Achieving maximum rotation speed depends on the concentricity and symmetry of the cutting tool and the complete tool assembly.

End Mill Holders - Metric

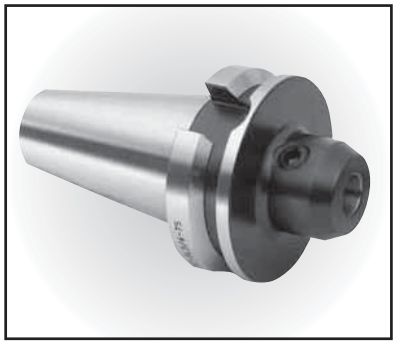

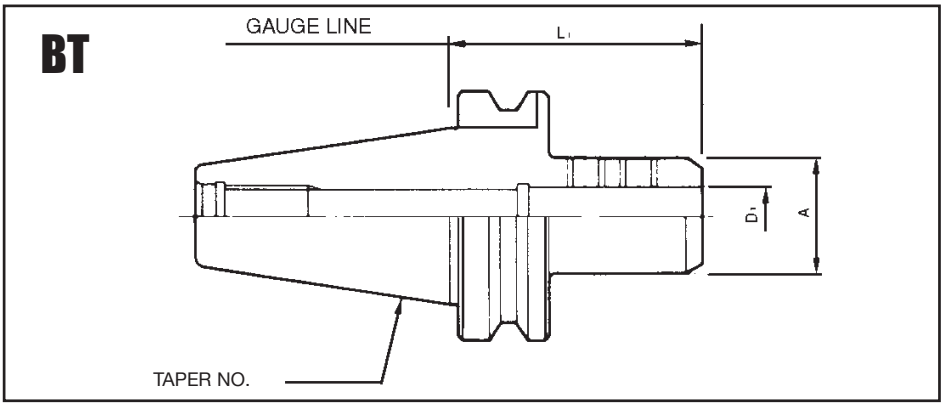

BT Flange Tools

Taper	Order No.	Device Type	D_1 (mm)	L_1 (mm)	A (mm)
30	477-406-M	BT30-SL 6-60	6	60	25
30	477-408-M	BT30-SL 8-60	8	60	28
30	477-410-M	BT30-SL 10-60	10	60	35
30	477-412-M	BT30-SL 12-60	12	60	42
30	477-416-M	BT30-SL 16-60	16	60	48
30	477-420-M	BT30-SL 20-75	20	75	52
40	477-106-M	BT40-SL 6-75	6	75	25
40	477-108-M	BT40-SL 8-75	8	75	28
40	477-110-M	BT40-SL 10-75	10	75	35
40	477-112-M	BT40-SL 12-75	12	75	42
40	477-116-M	BT40-SL 16-75	16	75	48
40	477-120-M	BT40-SL 20-75	20	75	52
40	477-125-M	BT40-SL 25-90	25	90	64
40	477-132-M	BT40-SL 32-90	32	90	64
50	477-306-M	BT50-SL 6-75	6	75	25
50	477-308-M	BT50-SL 8-75	8	75	28
50	477-310-M	BT50-SL 10-75	10	75	35
50	477-312-M	BT50-SL 12-75	12	75	42
50	477-316-M	BT50-SL 16-90	16	90	48
50	477-320-M	BT50-SL 20-90	20	90	52
50	477-325-M	BT50-SL 25-105	25	105	64
50	477-332-M	BT50-SL 32-105	32	105	72
50	477-340-M	BT50-SL 40-120	40	120	80
50	477-342-M	BT50-SL 42-120	42	120	80

TECHLEADER® TOOLING INC.

End Mill Holders - Inch

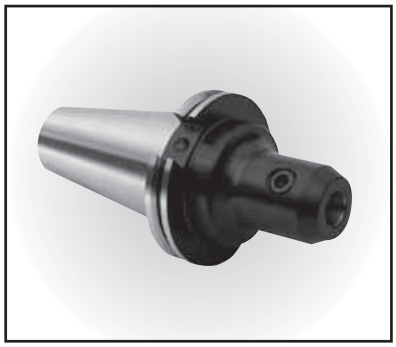

CT

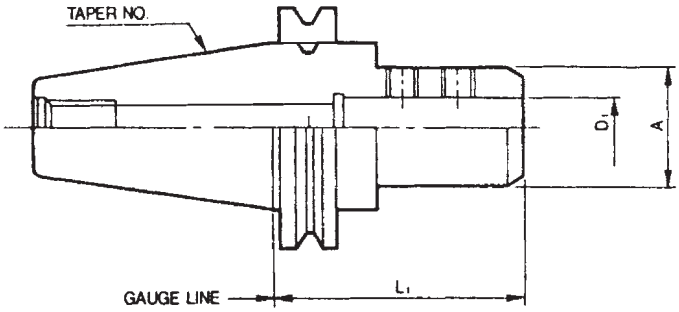

CT Flange Tools

**** These short stubby End Mill Holders may not work on all CNC machining centers with automatic tool changer.**

Please consult our order desk for details

Taper	Order No.	Device Type	D1 (in)	L1 (in)	A (in)
40	478-100	CT40-SL 1/8-2.50	0.125	2.50	0.75
40	478-101	CT40-SL 1/8-4.00	0.125	4.00	0.75
40	478-105	CT40-SL 3/16-2.50	0.1875	2.50	0.75
40	478-106	CT40-SL 3/16-4.00	0.1875	4.00	0.75
40	478-110	CT40-SL 1/4-2.50	0.250	2.50	0.81
40	478-111	CT40-SL 1/4-4.00	0.250	4.00	0.81
40	478-115	CT40-SL 5/16-2.50	0.3125	2.50	1.00
40	478-116	CT40-SL 5/16-4.00	0.3125	4.00	1.00
40	478-120	CT40-SL 3/8-2.50	0.375	2.50	1.00
40	478-121	CT40-SL 3/8-4.00	0.375	4.00	1.00
40	478-123	CT40-SL 7/16-2.50	0.4375	2.50	1.15
40	478-125-S	CT40-SL 1/2-1.75	0.500	1.75	1.25
40	478-125	CT40-SL 1/2-2.50	0.500	2.50	1.25
40	478-126	CT40-SL 1/2-4.00	0.500	4.00	1.25
40	478-130-S	CT40-SL 5/8-1.75	0.625	1.75	1.75
40	478-130	CT40-SL 5/8-3.00	0.625	3.00	1.50
40	478-131	CT40-SL 5/8-5.00	0.625	5.00	1.50
40	478-135-S	CT40-SL 3/4-1.75	0.750	1.75	1.75
40	478-135	CT40-SL 3/4-3.50	0.750	3.50	1.75
40	478-136	CT40-SL 3/4-5.00	0.750	5.00	1.75
40	478-140	CT40-SL 7/8-3.50	0.875	3.50	2.00
40	478-141	CT40-SL 7/8-5.50	0.875	5.00	2.00
40	**478-145-S	CT40-SL 1-1.75	1.000	1.75	1.75
40	478-145	CT40-SL 1-4.00	1.000	4.00	2.25
40	478-146	CT40-SL 1-6.00	1.000	6.00	2.25
40	**478-150-S	CT40-SL 1-1/4-2.00	1.250	2.00	2.25
40	478-150	CT40-SL 1-1/4-4.00	1.250	4.00	2.50
40	478-151	CT40-SL 1-1/4-6.00	1.250	6.00	2.50
40	478-155	CT40-SL 1-1/2-4.75	1.500	4.75	2.75
45	*478-225	CT45-SL 1/2-2.50	0.500	2.50	1.25
45	*478-230	CT45-SL 5/8-3.00	0.625	3.00	1.50
45	*478-235	CT45-SL 3/4-4.00	0.750	4.00	1.75
45	*478-256	CT45-SL 1-1/2-6.00	1.500	6.00	2.75
45	*478-260	CT45-SL 2-5.50	2.000	5.50	3.75
45	*478-261	CT45-SL 2-7.50	2.000	7.50	3.75

* While stock is still available

TECHLEADER® TOOLING INC.

End Mill Holders - Inch

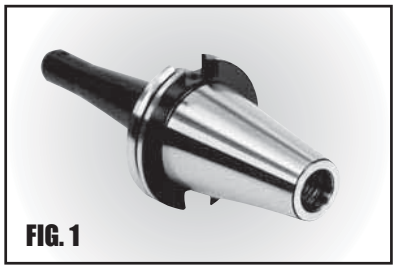

FIG. 1

CT Flange Tools

CT

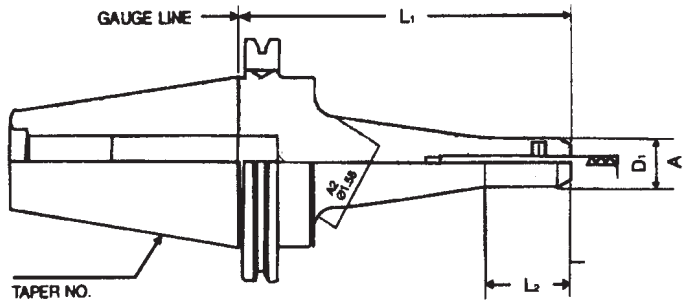

FIG. 1

Taper	Order No.	Device Type	D_1 (in)	L_1 (in)	L_2 (in)	A (in)	A_2 (in)
50	478-310	CT50-SL 1/4-2.50	0.250	2.50	1.58	0.81	1.58 tapered
50	478-311	CT50-SL 1/4-4.50	0.250	4.50	1.58	0.81	1.58 tapered
50	478-312	CT50-SL 1/4-6.00	0.250	6.00	1.58	0.81	1.58 tapered
50	478-313	CT50-SL 1/4-8.00	0.250	8.00	1.58	0.81	1.58 tapered

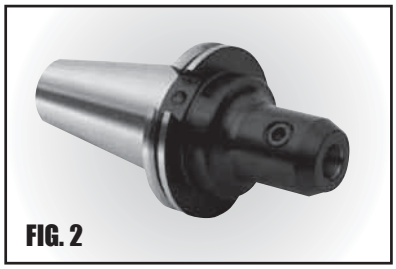

FIG. 2

CT

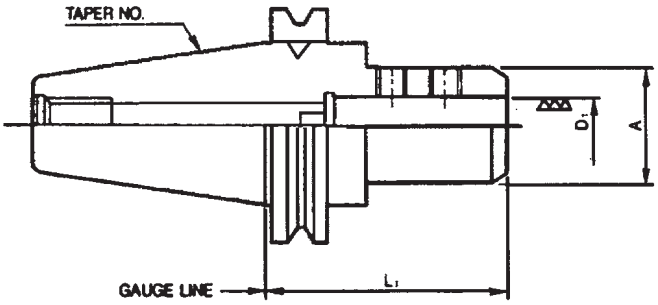

FIG. 2

Taper	Order No.	Device Type	D_1 (in)	L_1 (in)	A (in)
50	478-320	CT50-SL 3/8-2.50	0.375	2.50	1.00
50	478-321	CT50-SL 3/8-4.50	0.375	4.50	1.25
50	478-322	CT50-SL 3/8-6.00	0.375	6.00	1.50
50	478-323	CT50-SL 3/8-8.00	0.375	8.00	1.50
50	478-325	CT50-SL 1/2-2.63	0.500	2.63	1.25
50	478-326	CT50-SL 1/2-4.63	0.500	4.63	1.25
50	478-327	CT50-SL 1/2-6.00	0.500	6.00	1.50
50	478-328	CT50-SL 1/2-8.00	0.500	8.00	1.50
50	478-330	CT50-SL 5/8-3.75	0.625	3.75	1.50
50	478-331	CT50-SL 5/8-5.75	0.625	5.75	1.50
50	478-332	CT50-SL 5/8-8.00	0.625	8.00	1.65
50	478-335	CT50-SL 3/4-3.75	0.750	3.75	1.75
50	478-336	CT50-SL 3/4-5.75	0.750	5.75	1.75
50	478-337	CT50-SL 3/4-8.00	0.750	8.00	1.75
50	478-340	CT50-SL 7/8-3.75	0.875	3.75	2.00
50	478-341	CT50-SL 7/8-5.75	0.875	5.75	2.00
50	478-342	CT50-SL 7/8-8.00	0.875	8.00	2.00
50	478-345	CT50-SL 1-4.00	1.000	4.00	2.25
50	478-346	CT50-SL 1-6.00	1.000	6.00	2.25
50	478-347	CT50-SL 1-8.00	1.000	8.00	2.25
50	478-350	CT50-SL 1-1/4-4.00	1.250	4.00	2.50
50	478-351	CT50-SL 1-1/4-6.00	1.250	6.00	2.50
50	478-352	CT50-SL 1-1/4-8.00	1.250	8.00	2.50
50	478-355	CT50-SL 1-1/2-4.00	1.500	4.00	2.75
50	478-356	CT50-SL 1-1/2-6.00	1.500	6.00	2.75
50	478-357	CT50-SL 1-1/2-8.00	1.500	8.00	2.75
50	478-360	CT50-SL 2-6.00	2.00	6.00	3.75
50	478-361	CT50-SL 2-8.00	2.00	8.00	3.75

TECHLEADER® TOOLING INC.

End Mill Holders - Inch Balanced - G2.5

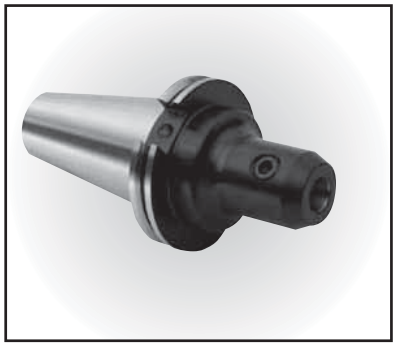

CT Flange Tools

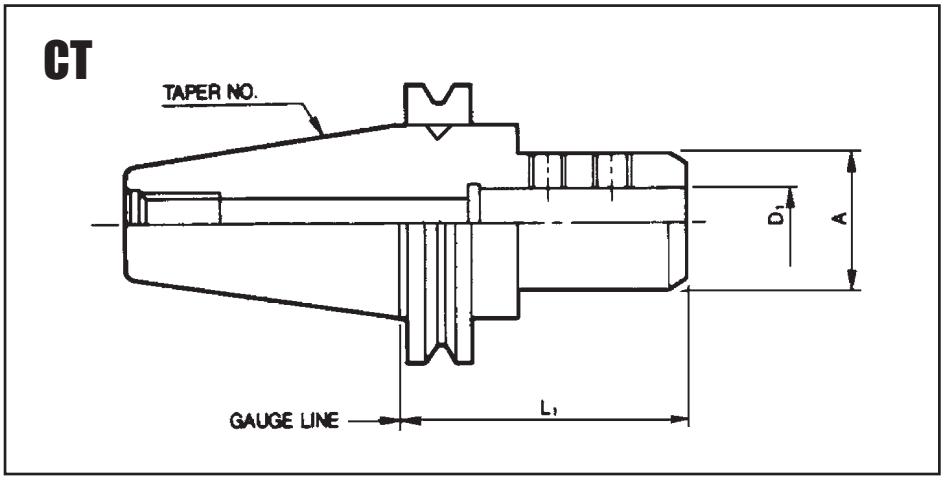

Taper	Order No.	Device Type	D_1 (in)	L_1 (in)	A (in)	Max RPM
40	478-200-B	CT40B-SL 1/8”- 2.50	0.125	2.50	0.75	20,000
40	478-201-B	CT40B-SL 1/8 - 4.00	0.125	4.00	0.75	15,000
40	478-205-B	CT40B-SL 3/16 - 2.50	0.1875	2.50	0.75	20,000
40	478-206-B	CT40B-SL 3/16 - 4.00	0.1875	4.00	0.75	15,000
40	478-210-B	CT40B-SL 1/4 - 2.50	0.250	2.50	0.81	20,000
40	478-211-B	CT40B-SL 1/4 - 4.00	0.250	4.00	0.81	15,000
40	478-215-B	CT40B-SL 5/16 - 2.50	0.3125	2.50	1.00	20,000
40	478-216-B	CT40B-SL 5/16 - 4.00	0.3125	4.00	1.00	15,000
40	478-220-B	CT40B-SL 3/8 - 2.50	0.375	2.50	1.00	20,000
40	478-221-B	CT40B-SL 3/8 - 4.00	0.375	4.00	1.00	15,000
40	478-225-B	CT40B-SL 1/2 - 1.75	0.500	1.75	1.75	20,000
40	478-226-B	CT40B-SL 1/2 - 2.50	0.500	2.50	1.25	15,000
40	478-227-B	CT40B-SL 1/2 - 4.00	0.500	4.00	1.25	15,000
40	478-230-B	CT40B-SL 5/8 - 1.75	0.625	1.75	1.75	20,000
40	478-231-B	CT40B-SL 5/8 - 3.00	0.625	3.00	1.50	15,000
40	478-232-B	CT40B-SL 5/8 - 5.00	0.625	5.00	1.50	15,000
40	478-235-B	CT40B-SL 3/4 - 1.75	0.750	1.75	1.75	15,000
40	478-236-B	CT40B-SL 3/4 - 3.50	0.750	3.50	1.75	12,000
40	478-237-B	CT40B-SL 3/4 - 5.00	0.750	5.00	1.75	12,000
40	478-240-B	CT40B-SL 7/8 - 3.50	0.875	3.50	2.00	12,000
40	478-241-B	CT40B-SL 7/8 - 5.50	0.875	5.50	2.00	12,000
40	478-245-B	CT40B-SL 1 - 1.75	1.000	1.75	1.75	15,000
40	478-246-B	CT40B-SL 1 - 4.00	1.000	4.00	2.25	12,000
40	478-247-B	CT40B-SL 1 - 6.00	1.000	6.00	2.25	12,000
40	478-250-B	CT40B-SL 1-1/4 - 2.00	1.250	2.00	2.25	10,000
40	478-251-B	CT40B-SL 1-1/4 - 4.00	1.250	4.00	2.50	8,000
40	478-252-B	CT40B-SL 1-1/4 - 6.00	1.250	6.00	2.50	8,000

NOTE: Achieving maximum rotation speed depends on the concentricity and symmetry of the cutting tool and the complete tool assembly.

TECHLEADER® TOOLING INC.

End Mill Holders - Metric

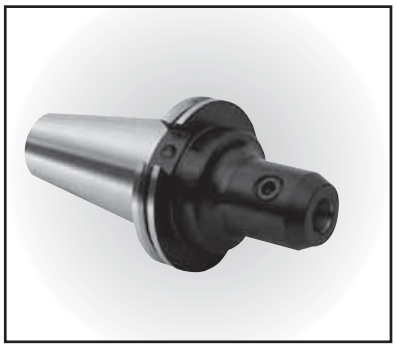

CT Flange Tools

CT

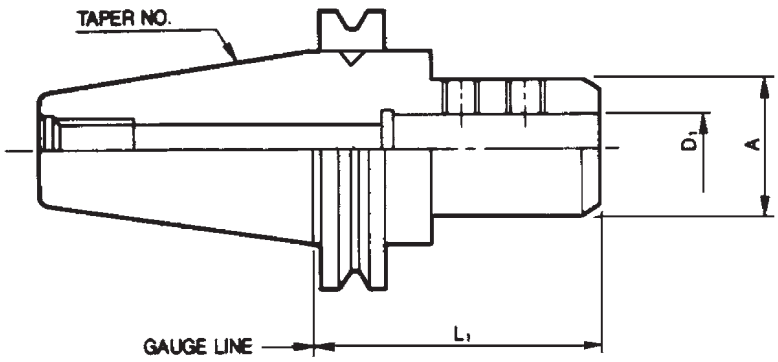

Taper	Order No.	Device Type	D_1 (mm)	L_1 (in)	A (mm)
40	478-106-M	CT40-SL 6-2.50	6	2.50	25
40	478-107-M	CT40-SL 6-4.00	6	4.00	25
40	478-108-M	CT40-SL 8-2.50	8	2.50	28
40	478-109-M	CT40-SL 8-4.00	8	4.00	28
40	478-110-M	CT40-SL 10-2.50	10	2.50	35
40	478-111-M	CT40-SL 10-4.00	10	4.00	35
40	478-112-M	CT40-SL 12-2.50	12	2.50	42
40	478-113-M	CT40-SL 12-4.00	12	4.00	42
40	478-114-M	CT40-SL 14-3.00	14	3.00	42
40	478-116-M	CT40-SL 16-3.00	16	3.00	48
40	478-117-M	CT40-SL 16-5.00	16	5.00	48
40	478-120-M	CT40-SL 20-3.00	20	3.00	52
40	478-121-M	CT40-SL 20-5.00	20	5.00	52
40	478-125-M	CT40-SL 25-4.00	25	4.00	64
40	478-126-M	CT40-SL 25-6.00	25	6.00	64
40	478-132-M	CT40-SL 32-4.00	32	4.00	64
40	478-133-M	CT40-SL 32-6.00	32	6.00	64
50	478-306-M	CT50-SL 6-2.50	6	2.50	25
50	478-307-M	CT50-SL 6-4.50	6	4.50	25
50	478-308-M	CT50-SL 8-2.50	8	2.50	28
50	478-309-M	CT50-SL 8-4.50	8	4.50	28
50	478-310-M	CT50-SL 10-2.50	10	2.50	35
50	478-311-M	CT50-SL 10-4.50	10	4.50	35
50	478-312-M	CT50-SL 12-2.50	12	2.50	42
50	478-313-M	CT50-SL 12-4.50	12	4.50	42
50	478-314-M	CT50-SL 14-3.75	14	3.75	42
50	478-315-M	CT50-SL 14-5.75	14	5.75	42
50	478-316-M	CT50-SL 16-3.75	16	3.75	48
50	478-317-M	CT50-SL 16-5.75	16	5.75	48
50	478-320-M	CT50-SL 20-3.75	20	3.75	52
50	478-321-M	CT50-SL 20-5.75	20	5.75	52
50	478-325-M	CT50-SL 25-4.00	25	4.00	64
50	478-326-M	CT50-SL 25-6.00	25	6.00	64
50	478-332-M	CT50-SL 32-4.00	32	4.00	72
50	478-333-M	CT50-SL 32-6.00	32	6.00	72
50	478-340-M	CT50-SL 40-4.00	40	4.00	80
50	478-341-M	CT50-SL 40-6.00	40	6.00	80
50	478-342-M	CT50-SL 42-4.00	42	4.00	80
50	478-343-M	CT50-SL 42-6.00	42	6.00	80
50	478-350-M**	CT50-SL 50-6.00	50	6.00	100

*** Not Balanced.*

TECHLEADER® TOOLING INC.

End Mill Holders

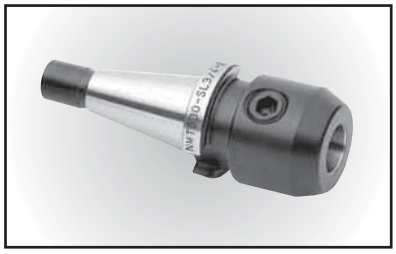

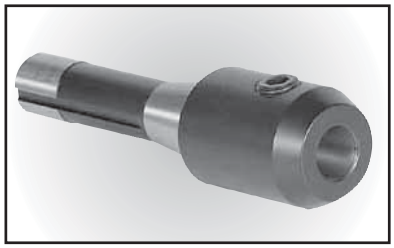

R8 & NMTB-QC Flange Tools

NMTB Tool Holders are qualified for use with Erickson QC spindles

NMTB

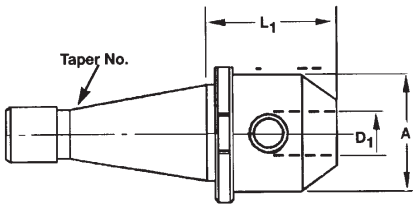

R8

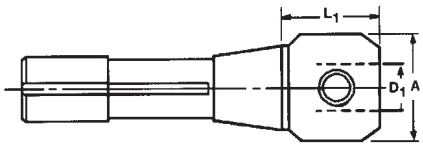

Taper	Order No.	Device Type	D_1 (in)	L_1 (in)	A (in)
30	678-000	NMTB30QC-SL 1/8-1.75	0.125	1.75	0.75
30	678-005	NMTB30QC-SL 3/16-1.75	0.1875	1.75	0.75
30	678-010	NMTB30QC-SL 1/4-1.75	0.250	1.75	0.81
30	678-015	NMTB30QC-SL 5/16-1.75	0.3125	1.75	1.00
30	678-020	NMTB30QC-SL 3/8-1.75	0.375	1.75	1.00
30	678-025	NMTB30QC-SL 1/2-1.75	0.500	1.75	1.25
30	678-030	NMTB30QC-SL 5/8-1.75	0.625	1.75	1.50
30	678-035	NMTB30QC-SL 3/4-2.25	0.750	2.25	1.75
30	678-040	NMTB30QC-SL 7/8-2.25	0.875	2.25	2.00
30	678-045	NMTB30QC-SL 1-2.6875	1.000	2.6875	2.25
40	678-200	NMTB40QC-SL 1/8-2.3125	0.125	2.3125	0.75
40	678-205	NMTB40QC-SL 3/16-2.3125	0.1875	2.3125	0.75
40	678-210	NMTB40QC-SL 1/4-2.3125	0.250	2.3125	0.81
40	678-215	NMTB40QC-SL 5/16-2.3125	0.3125	2.3125	1.00
40	678-220	NMTB40QC-SL 3/8-2.3125	0.375	2.3125	1.00
40	678-225	NMTB40QC-SL 1/2-2.3125	0.500	2.3125	1.25
40	678-230	NMTB40QC-SL 5/8-2.3125	0.625	2.3125	1.50
40	678-235	NMTB40QC-SL 3/4-2.3125	0.750	2.3125	1.75
40	678-240	NMTB40QC-SL 7/8-2.9375	0.875	2.9375	2.00
40	678-245	NMTB40QC-SL 1-3.375	1.000	3.375	2.25
40	678-250	NMTB40QC-SL 1-1/4-3.6875	1.250	3.6875	2.50
40	678-255	NMTB40QC-SL 1-1/2-3.9375	1.500	3.9375	2.75
50	678-420	NMTB50QC-SL 3/8-2.75	0.375	2.75	1.00
50	678-425	NMTB50QC-SL 1/2-2.75	0.500	2.75	1.25
50	678-430	NMTB50QC-SL 5/8-2.75	0.625	2.75	1.50
50	678-435	NMTB50QC-SL 3/4-2.875	0.750	2.875	1.75
50	678-440	NMTB50QC-SL 7/8-2.875	0.875	2.875	2.00
50	678-445	NMTB50QC-SL 1-3.50	1.000	3.50	2.25
50	678-450	NMTB50QC-SL 1-1/4-3.50	1.250	3.50	2.50
50	678-455	NMTB50QC-SL 1-1/2-4.00	1.500	4.00	2.75
50	678-460	NMTB50QC-SL 2-4.6875	2.000	4.6875	3.75
R8	678-805	R8-SL 3/16	0.1875	1.3125	0.75
R8	678-810	R8-SL 1/4	0.250	1.3125	0.8125
R8	678-820	R8-SL 3/8	0.375	1.3125	1.00
R8	678-825	R8-SL 1/2	0.500	1.3125	1.375
R8	678-830	R8-SL 5/8	0.625	1.500	1.625
R8	678-835	R8-SL 3/4	0.750	2.375	1.875
R8	678-840	R8-SL 7/8	0.875	2.750	2.00
R8	678-845	R8-SL 1	1.000	3.250	2.375
R8	678-850	R8-SL 1-1/4	1.250	3.250	2.50
R8	678-855	R8-SL 1-1/2	1.500	3.750	3.00

TECHLEADER® TOOLING INC.

End Mill Holders - Inch

HSK A

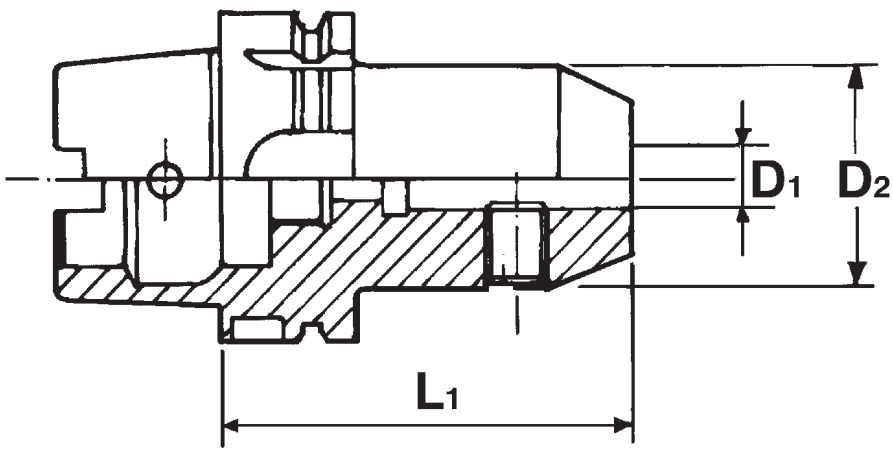

Taper	Order No.	Device Type	D1 (in)	L1 in)	D2 (in)	Max RPM
63	578-505A	HSK63A-SL 3/16”-3.00	0.1875	3.00	0.75	20,000
63	578-506A	HSK63A-SL 3/16”-5.00	0.1875	5.00	0.75	15,000
63	578-510A	HSK63A-SL 1/4”-3.00	0.250	3.00	0.81	20,000
63	578-511A	HSK63A-SL 1/4”-5.00	0.250	5.00	0.81	15,000
63	578-515A	HSK63A-SL 5/16”-3.00	0.3125	3.00	1.00	20,000
63	578-516A	HSK63A-SL 5/16”-5.00	0.3125	5.00	1.00	15,000
63	578-520A	HSK63A-SL 3/8”-3.00	0.375	3.00	1.00	20,000
63	578-521A	HSK63A-SL 3/8”-5.00	0.375	5.00	1.00	15,000
63	578-525A	HSK63A-SL 1/2”-4.00	0.500	4.00	1.25	15,000
63	578-526A	HSK63A-SL 1/2”-5.00	0.500	5.00	1.25	15,000
63	578-530A	HSK63A-SL 5/8”-4.00	0.625	4.00	1.50	15,000
63	578-531A	HSK63A-SL 5/8”-5.00	0.625	5.00	1.50	15,000
63	578-535A	HSK63A-SL 3/4”-4.50	0.750	4.50	1.75	12,000
63	578-536A	HSK63A-SL 3/4”-6.00	0.750	6.00	1.75	12,000
63	578-545A	HSK63A-SL 1”-4.50	1.000	4.50	2.25	12,000
63	578-546A	HSK63A-SL 1”-6.00	1.000	6.00	2.25	12,000
63	578-550A	HSK63A-SL 1-1/4”-4.50	1.250	4.50	2.25	8,000
63	578-551A	HSK63A-SL 1-1/4”-6.00	1.250	4.50	2.25	8,000

NOTE: Achieving maximum rotation speed depends on the concentricity and symmetry of the cutting tool and the complete tool assembly.

TECHLEADER® TOOLING INC.

Set Screws for End Mill Holders

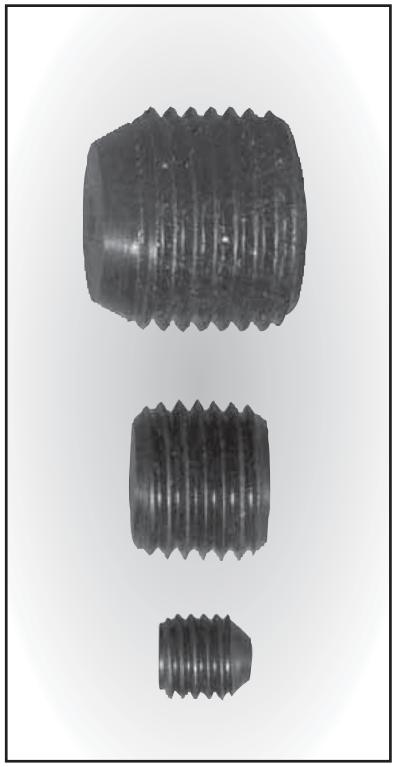

End Mill Holder Size	Order No.	Set Screw Size
1/8”	30116-501	No. 8 - 32UNC x 1/4”
3/16”	30116-502	No. 10 - 32UNF x 1/4”
1/4”	30116-503	1/4” - 28UNF x 1/4”
5/16”	30116-503	1/4” - 28UNF x 1/4”
3/8”	30116-504	3/8” - 24UNF x 8MM
1/2”	30116-505	7/16” - 20UNF x 3/8”
1/2” (478-125-S)	30116-941	3/8” - 24UNF x 8MM
5/8”	30116-506	9/16” - 18UNF x 12MM
5/8” (478-130-S)	30116-961	9/16” - 18UNF x 12MM
3/4”	30116-507	5/8” - 18UNF x 1/2”
3/4” (478-135-S)	30116-972	5/8” - 18UNF x 7/16”
7/8”	30116-507	5/8” - 18UNF x 1/2”
1”	30116-508	3/4” - 16UNF x 11/16”
1” (478-145-S)	30116-982	3/4” - 16UNF x 3/8”
1-1/4”	30116-508	3/4” - 16UNF x 11/16”
1-1/4” (478-150-S)	30116-982	3/4” - 16UNF x 3/8”
1-1/2”	30116-508	3/4” - 16UNF x 11/16”
2”	30116-509	1” - 14UNF x 7/8”

End Mill Holder Size	Order No.	Set Screw Size
6MM	30116-061	M6 x 1P
8MM	30116-081	M8 x 1.25P
10MM	30116-101	M10 x 1.5P
12MM	30116-121	M12 x 1.75P
14MM	30116-121	M12 x 1.75P
16MM	30116-141	M14 x 2.0P
18MM	30116-141	M14 x 2.0P
20MM	30116-161	M16 x 2.0P
25MM	30116-181	M18 x 2.0P
32MM	30116-201	M20 x 2.0P
40MM	30116-201	M20 x 2.0P
42MM	30116-201	M20 x 2.0P

TECHLEADER® TOOLING INC.

Shell Mill Holders

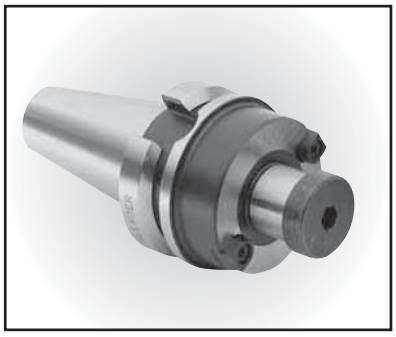

BT Flange Tools

For Parts, see page 1-32

BT

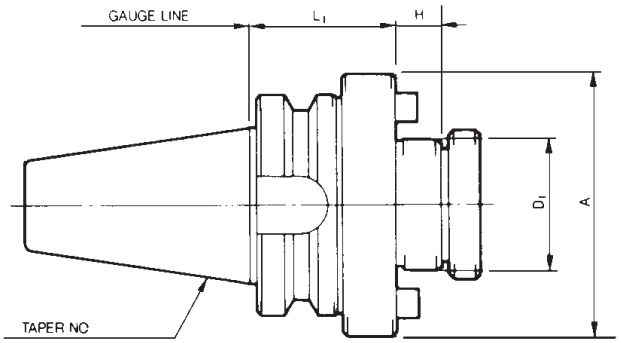

Taper	Order No.	Device Type	D_1 (in)	L_1 (in)	H (in)	A (in)
30	479-435	BT30 – SM 3/4 – 30	0.750	1.18	0.69	1.75
30	479-445	BT30 – SM 1 – 45	1.000	1.77	0.69	2.25
35	479-025*	BT35 – SM 1/2 – 30	0.500	1.18	0.55	1.49
35	479-050*	BT35 – SM 1-1/4 – 45	1.250	1.77	0.69	2.75
40	479-135	BT40 – SM 3/4 – 60	0.750	2.36	0.69	1.75
40	479-136	BT40 – SM 3/4 – 101.6	0.750	4.00	0.69	1.75
40	479-145	BT40 – SM 1 – 45	1.000	1.77	0.69	2.25
40	479-146	BT40 – SM 1 – 101.6	1.000	4.00	0.69	2.25
40	479-150	BT40 – SM 1-1/4 – 60	1.250	2.36	0.69	2.75
40	479-155	BT40 – SM 1-1/2 – 60	1.500	2.36	0.94	3.82
45	479-235*	BT45 – SM 3/4 – 45	0.750	1.77	0.69	1.75
45	479-255*	BT45 – SM 1-1/2 – 60	1.500	2.36	0.94	3.82
50	479-335	BT50 – SM 3/4 – 60	0.750	2.36	0.69	1.75
50	479-345	BT50 – SM 1 – 60	1.000	2.36	0.69	2.25
50	479-350	BT50 – SM 1-1/4 – 45	1.250	1.77	0.69	2.75
50	479-355	BT50 – SM 1-1/2 – 45	1.500	1.77	0.94	3.82
50	479-360	BT50 – SM 2 – 60	2.000	2.36	0.94	4.13
50	479-365**	BT50 – FM 2-1/2 – 75	2.500	2.95	1.10	5.06

* While stock is still available
** Includes 4 tapped holes 5/8" - 11UNC on a 4" Bolt Circle

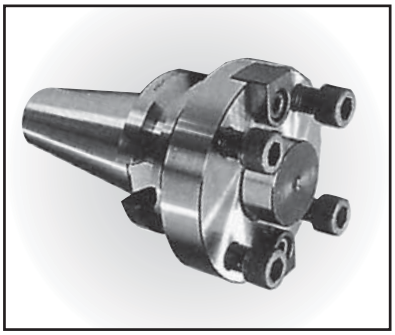

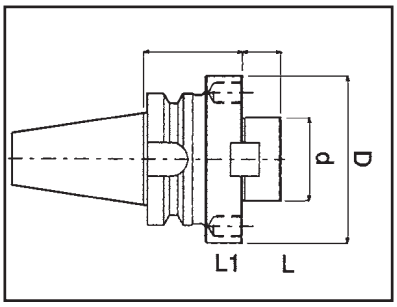

**Face Mill Holders

TECHLEADER® TOOLING INC.

Shell Mill Holders

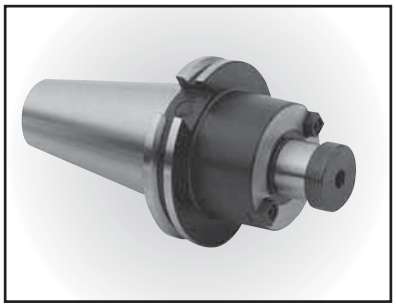

CT Flange Tools

For Parts, see page 1-32

CT

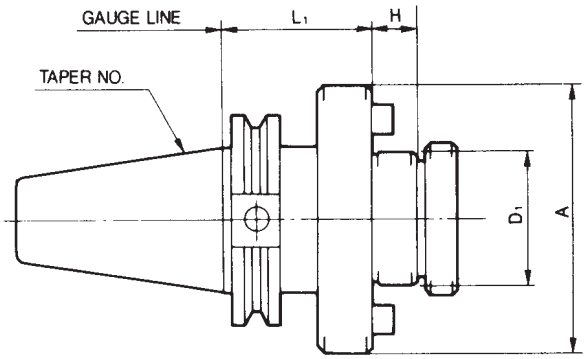

Taper	Order No.	Device Type	D_1 (in)	L_1 (in)	H (in)	A (in)
40	480-135	CT40 – SM 3/4 – 1.75	0.750	1.75	0.69	1.75
40	480-136	CT40 – SM 3/4 – 4.00	0.750	4.00	0.69	1.75
40	480-137	CT40 – SM 3/4 – 6.00	0.750	6.00	0.69	1.75
40	480-145	CT40 – SM 1 – 2.50	1.000	2.50	0.69	2.25
40	480-146	CT40 – SM 1 – 4.00	1.000	4.00	0.69	2.25
40	480-147	CT40 – SM 1 – 6.00	1.000	6.00	0.69	2.25
40	480-150	CT40 – SM 1-1/4 – 2.50	1.250	2.50	0.69	2.75
40	480-151	CT40 – SM 1-1/4 – 4.50	1.250	4.50	0.69	2.75
40	480-155	CT40 – SM 1-1/2 – 2.50	1.500	2.50	0.94	3.82
40	480-156	CT40 – SM 1-1/2 – 4.00	1.500	4.00	0.94	3.82
45	480-245*	CT45 – SM 1 – 2.00	1.000	2.00	0.69	2.25
45	480-250*	CT45 – SM 1-1/4 – 2.50	1.250	2.50	0.69	2.75
45	480-255*	CT45 – SM 1-1/2 – 2.40	1.500	2.40	0.94	3.82
45	480-260*	CT45 – SM 2 – 2.40	2.000	2.40	0.94	4.13
45	**480-265*	CT45 – FM 2-1/2 – 2.40	2.500	2.40	1.13	5.06
50	480-335	CT50 – SM 3/4 – 1.50	0.750	1.50	0.69	1.75
50	480-336	CT50 – SM 3/4 – 3.50	0.750	3.50	0.69	1.75
50	480-337	CT50 – SM 3/4 – 5.50	0.750	5.50	0.69	1.75
50	480-345	CT50 – SM 1 – 2.00	1.000	2.00	0.69	2.25
50	480-346	CT50 – SM 1 – 4.00	1.000	4.00	0.69	2.25
50	480-347	CT50 – SM 1 – 6.00	1.000	6.00	0.69	2.25
50	480-350	CT50 – SM 1-1/4 – 1.50	1.250	1.50	0.69	2.75
50	480-351	CT50 – SM 1-1/4 – 3.50	1.250	3.50	0.69	2.75
50	480-352	CT50 – SM 1-1/4 – 5.50	1.250	5.50	0.69	2.75
50	480-355	CT50 – SM 1-1/2 – 2.40	1.500	2.40	0.94	3.82
50	480-356	CT50 – SM 1-1/2 – 4.00	1.500	4.00	0.94	3.82
50	480-357	CT50 – SM 1-1/2 – 6.00	1.500	6.00	0.94	3.82
50	480-360	CT50 – SM 2 – 2.40	2.000	2.40	0.94	4.13
50	480-361	CT50 – SM 2 – 4.00	2.000	4.00	0.94	4.13
50	480-362	CT50 – SM 2 – 6.00	2.000	6.00	0.94	4.13
50	**480-365	CT50 – FM 2-1/2 – 2.40	2.500	2.40	1.13	5.06
50	**480-366	CT50 – FM 2-1/2 – 4.00	2.500	4.00	1.13	5.06
50	**480-367	CT50 – FM 2-1/2 – 6.00	2.500	6.00	1.13	5.06

* While stock is still available
** Includes 4 tapped holes 5/8" - 11UNC on a 4" Bolt Circle

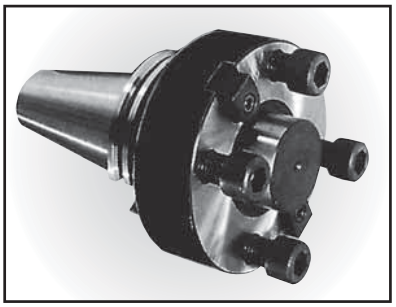

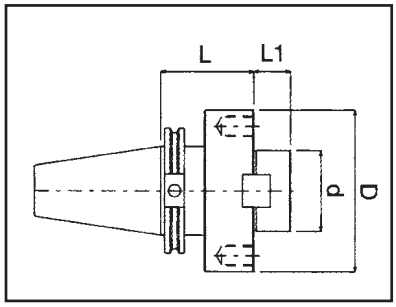

**Face Mill Holders

TECHLEADER® TOOLING INC.

Shell Mill Holders

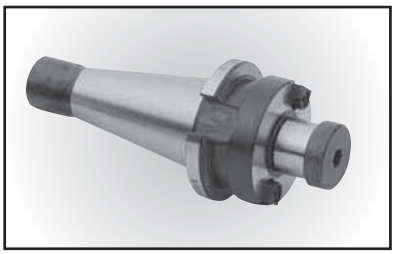

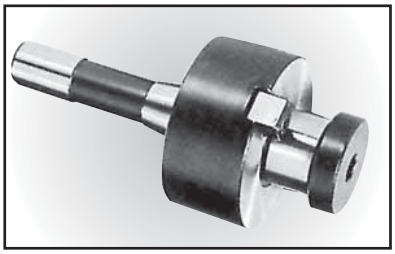

NMTB

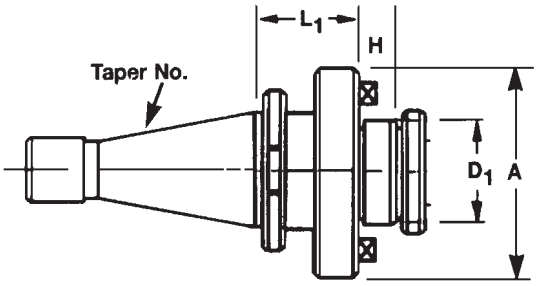

R8

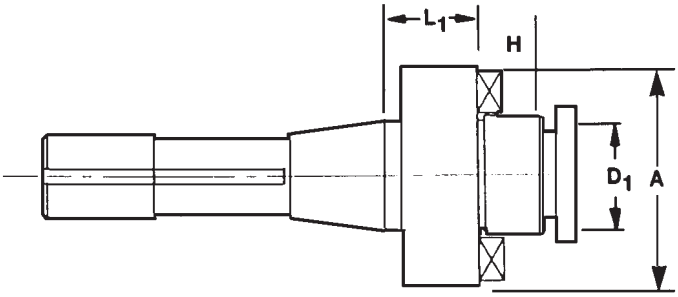

R8 & NMTB-QC Flange Tools

NMTB tool holders are qualified for use with Erickson QC spindles

For Parts, see page 1-32

Taper	Order No.	Device Type	D_1 (in)	L_1 (in)	H (in)	A (in)
30	680-035	NMTB30QC-SM 3/4-1.312	0.750	1.312	0.69	1.75
30	680-045	NMTB30QC-SM 1-1.312	1.000	1.312	0.69	2.25
40	680-235	NMTB40QC-SM 3/4-0.875	0.750	0.875	0.69	1.75
40	680-245	NMTB40QC-SM 1- 1.3125	1.000	1.3125	0.69	2.25
40	680-250	NMTB40QC-SM 1-1/4-1.500	1.250	1.500	0.69	2.75
40	680-255	NMTB40QC-SM 1-1/2-1.625	1.500	1.625	0.94	3.82
50	680-435	NMTB50QC-SM 3/4-1.250	0.750	1.250	0.69	1.75
50	680-445	NMTB50QC-SM 1-1.875	1.000	1.875	0.69	2.25
50	680-450	NMTB50QC-SM 1-1/4-1.875	1.250	1.875	0.69	2.75
50	680-455	NMTB50QC-SM 1-1/2-1.875	1.500	1.875	0.94	3.82
50	680-460	NMTB50QC-SM 2-1.875	2.000	1.875	0.94	4.13
50	**680-465	NMTB50QC-FM 2-1/2- 2.50	2-1/2	2.50	1.13	5.06
R8	680-835	R8-SM 3/4	0.750	1.00	0.69	1.75
R8	680-845	R8-SM 1	1.000	1.00	0.69	2.25
R8	680-850	R8-SM 1-1/4	1.250	1.00	0.69	2.75
R8	680-855	R8-SM 1-1/2	1.500	1.75	0.94	3.82

** Includes 4 tapped holes 5/8" - 11UNC on a 4" Bolt Circle

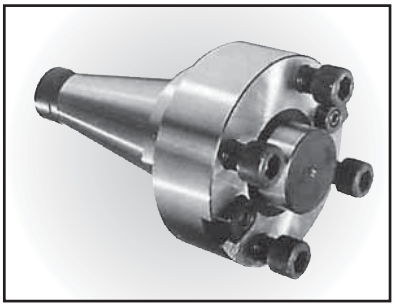

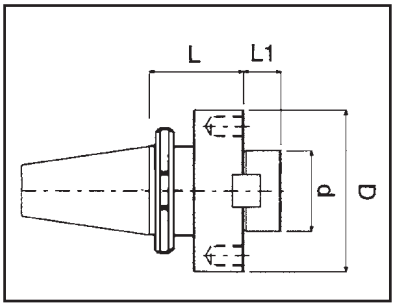

**Face Mill Holders

Shell Mill Holders

HSK-A
Flange Tools

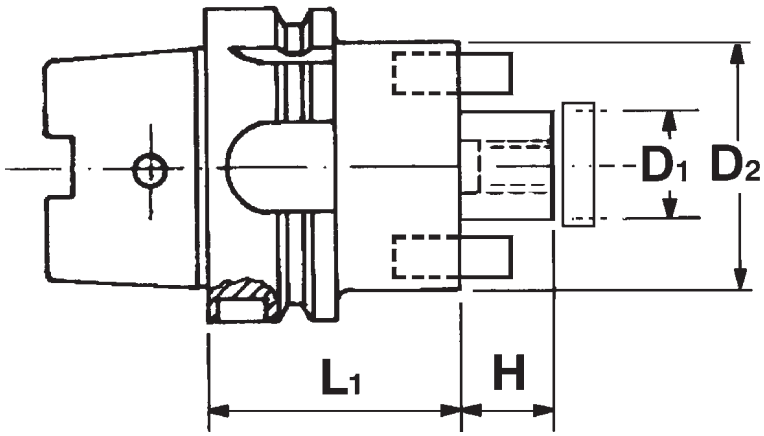

Taper	Order No.	Device Type	D_1 (in)	L_1 (in)	H (in)	Key Size (in)	Max RPM
63A	580-535A	HSK63A-SM 3/4”-3.00	0.750	3.00	0.69”	0.3125”	10,000
63A	580-536A	HSK63A-SM 3/4”-5.00	0.750	5.00	0.69”	0.3125”	8,000
63A	580-545A	HSK63A-SM 1”-3.00	1.000	3.00	0.69”	0.375”	10,000
63A	580-546A	HSK63A-SM 1”-5.00	1.000	5.00	0.69”	0.375”	8,000
63A	580-550A	HSK63A-SM 1-1/4”-3.00	1.250	3.00	0.69”	0.500”	8,000
63A	580-551A	HSK63A-SM 1-1/4”-5.00	1.250	5.00	0.69”	0.500”	6,000

Parts for Techleader Shell Mill Holders

DRIVE KEY SCREWS

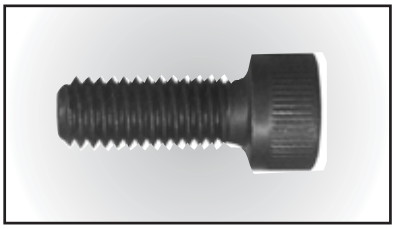

Holder Size	Order No.	Drive Key Screws
1/2”	30130-303	M3 x 0.5P x 10MM
3/4”	30130-303	M3 x 0.5P x 10MM
1”	30130-304	M4 x 0.7P x 10MM
1-1/4”	30130-305	M5 x 0.8P x 12MM
1-1/2”	30130-306	M6 x 1.0P x 15MM
2”	30130-308	M8 x 1.25P x 20MM
2-1/2”	30130-308	M8 x 1.25P x 20MM

DRIVE KEY

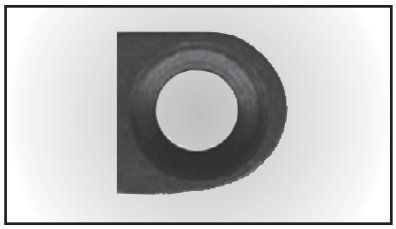

Holder Size	Order No.	Drive Keys
1/2”	30130-111	6.2MM x 8MM
3/4”	30130-112	7.8MM x 8MM
1”	30130-102	9.4MM x 10MM
1-1/4”	30130-106	12.6MM x 12MM
1-1/2”	30130-108	15.8MM x 20MM
2”	30130-109	18.9MM x 22MM
2-1/2”	30130-110	25.3MM x 20MM

ARBOR SCREWS

Holder Size	Order No.	Arbor Screw Size
1/2”	30130-207	1/4” - 28UNF
3/4”	30130-208	3/8” - 24UNF
1”	30130-209	1/2” - 20UNF
1-1/4”	30130-210	5/8” - 18UNF
1-1/2”	30130-211	3/4” - 16UNF
2”	30130-212	1” - 14UNF

TECHLEADER® TOOLING INC.

Morse Taper Holders & Reduction Sleeves

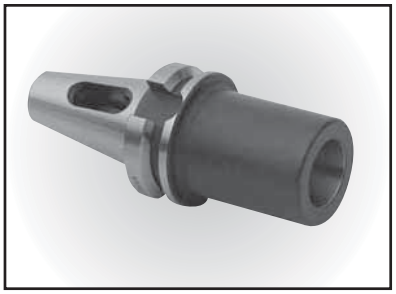

BT Flange Tools

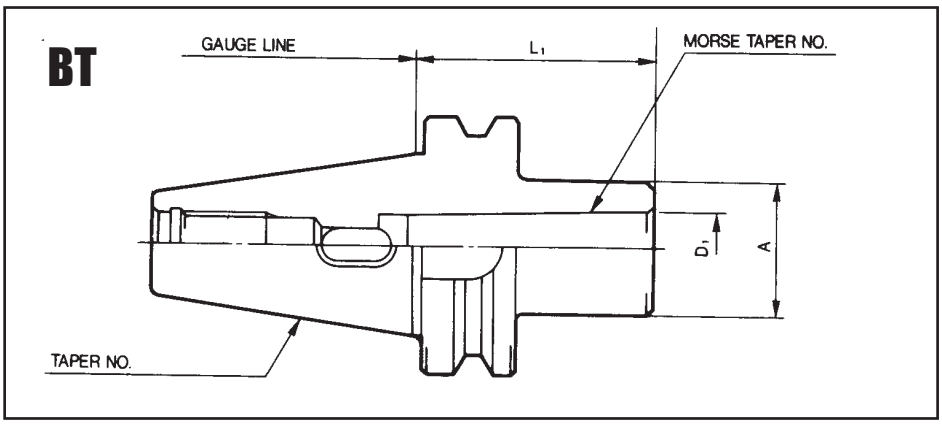

Taper	Order No.	Device Type	M.T. No.	L_1 (in)	D_1 (in)	A (in)
30	491-400	BT30 – MTA 1 – 45	1	1.77	.475	0.98
30	491-405	BT30 – MTA 2 – 60	2	2.36	.700	1.26
35	491-000*	BT35 – MTA 1 – 45	1	1.77	.475	0.98
35	491-005*	BT35 – MTA 2 – 60	2	2.36	.700	1.26
35	491-010*	BT35 – MTA 3 – 75	3	2.95	.938	1.58
40	491-100	BT40 – MTA 1 – 45	1	1.77	.475	0.98
40	491-105	BT40 – MTA 2 – 60	2	2.36	.700	1.26
40	491-110	BT40 – MTA 3 – 75	3	2.95	.938	1.58
40	491-115	BT40 – MTA 4 – 90	4	3.54	1.301	1.97
50	491-300	BT50 – MTA 1 – 45	1	1.77	.475	0.98
50	491-305	BT50 – MTA 2 – 45	2	1.77	.700	1.26
50	491-310	BT50 – MTA 3 – 45	3	1.77	.938	1.58
50	491-315	BT50 – MTA 4 – 75	4	2.95	1.301	1.97
50	491-320	BT50 – MTA 5 – 105	5	4.13	1.748	2.76

While stock is still available.

Reduction Sleeve

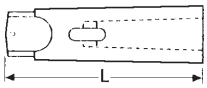 Order No.	Morse Taper		Overall Length	
	OUTSIDE	INSIDE	MM	INCHES
807-201	2	1	92	3.625
807-301	3	1	99	3.875
807-302	3	2	112	4.375
807-401	4	1	124	4.875
807-402	4	2	124	4.875
807-403	4	3	140	5.500
807-501	5	1	156	6.125
807-502	5	2	156	6.125
807-503	5	3	156	6.125
807-504	5	4	171	6.750

TECHLEADER® TOOLING INC.

Morse Taper Holders & Reduction Sleeves

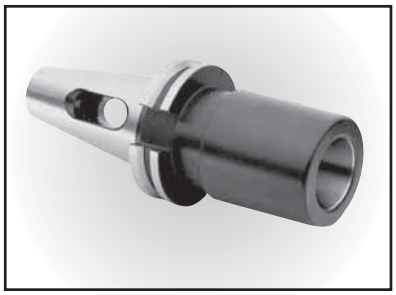

CT Flange Tools

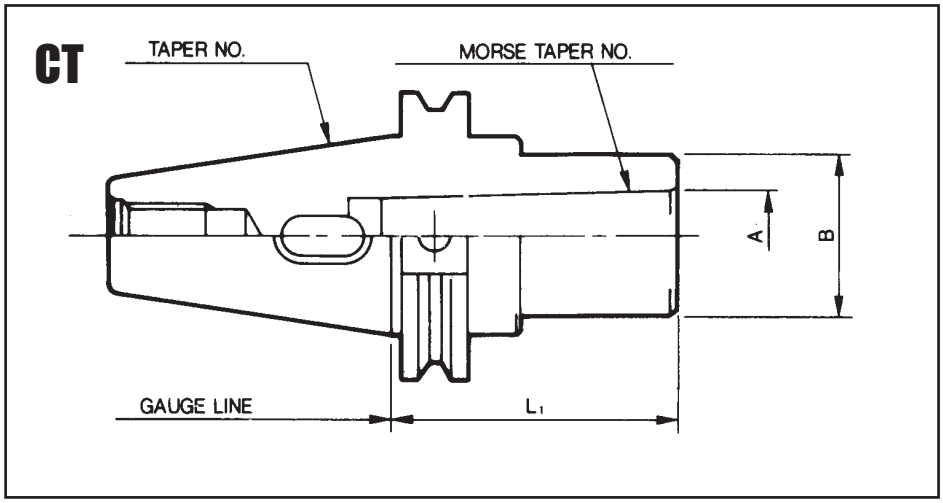

Taper	Order No.	Device Type	M.T. No.	L_1 (in)	A (in)	B (in)
40	492-100	CT40 – MT 1 – 1.50	1	1.50	0.475	1.00
40	492-105	CT40 – MT 2 – 2.00	2	2.00	0.700	1.25
40	492-110	CT40 – MT 3 – 3.00	3	3.00	0.938	1.62
40	492-115	CT40 – MT 4 – 3.50	4	3.50	1.231	2.00
45	492-220*	CT45 – MT 5 – 4.69	5	4.69	1.748	2.75
50	492-300	CT50 – MT 1 – 1.50	1	1.50	0.475	1.00
50	492-305	CT50 – MT 2 – 2.00	2	2.00	0.700	1.25
50	492-310	CT50 – MT 3 – 2.50	3	2.50	0.938	1.62
50	492-315	CT50 – MT 4 – 3.38	4	3.38	1.231	2.00
50	492-320	CT50 – MT 5 – 4.00	5	4.00	1.748	2.75

*While stock is still available.

Reduction Sleeve

Order No.	Morse Taper		Overall Length	
	OUTSIDE	INSIDE	MM	INCHES
807-201	2	1	92	3.625
807-301	3	1	99	3.875
807-302	3	2	112	4.375
807-401	4	1	124	4.875
807-402	4	2	124	4.875
807-403	4	3	140	5.500
807-501	5	1	156	6.125
807-502	5	2	156	6.125
807-503	5	3	156	6.125
807-504	5	4	171	6.750

TECHLEADER® TOOLING INC.

Morse Taper Holders

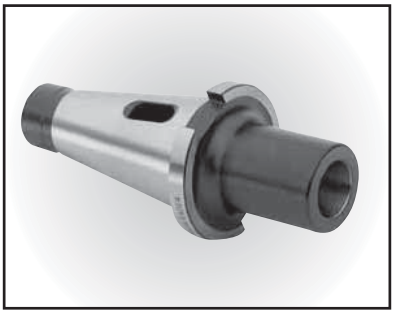

NMTB Taper to Morse Taper Holders

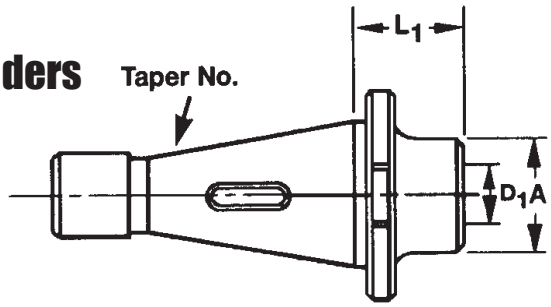

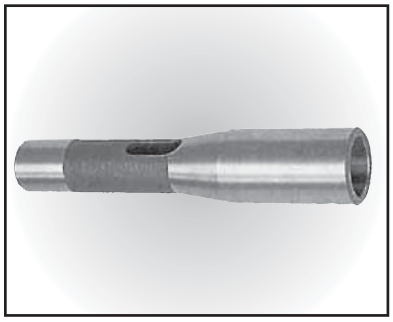

R8 to Morse Taper Holders

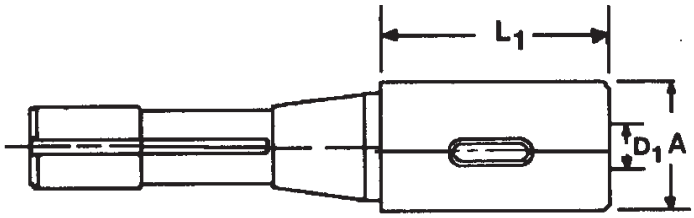

R8 & NMTB-QC Flange Tools

NMTB tool holders are qualified for use with Erickson QC spindles

Taper	Order No.	Device Type	L_1 (in)	D_1 (in)	A (in)
30	692-000	NMTB30QC-MT 1-1.00	1.00	0.475	0.98
30	692-005	NMTB30QC-MT 2-2.125	2.125	0.700	1.26
30	692-010	NMTB30QC-MT 3-2.8125	2.8125	0.938	1.58
40	692-200	NMTB40QC-MT 1-0.9375	0.9375	0.475	0.98
40	692-205	NMTB40QC-MT 2-1.750	1.750	0.700	1.26
40	692-210	NMTB40QC-MT 3-2.250	2.250	0.938	1.58
40	692-215	NMTB40QC-MT 4-3.00	3.00	1.301	1.97
50	692-405	NMTB50QC-MT 2-1.875	1.875	0.700	1.26
50	692-410	NMTB50QC-MT 3-2.375	2.375	0.938	1.58
50	692-415	NMTB50QC-MT 4-3.250	3.250	1.301	1.97
50	692-420	NMTB50QC-MT 5-4.625	4.625	1.748	2.76
R8	692-800	R8-MT 1	—	0.475	0.98
R8	692-805	R8-MT 2	—	0.700	1.26
R8	692-810	R8-MT 3	—	0.938	1.58

Morse Taper Holders

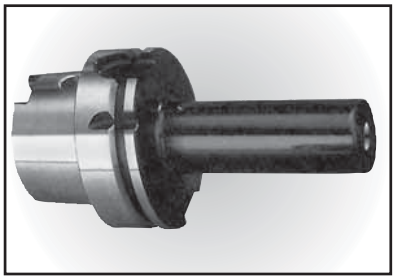

HSK-A Flange Tools

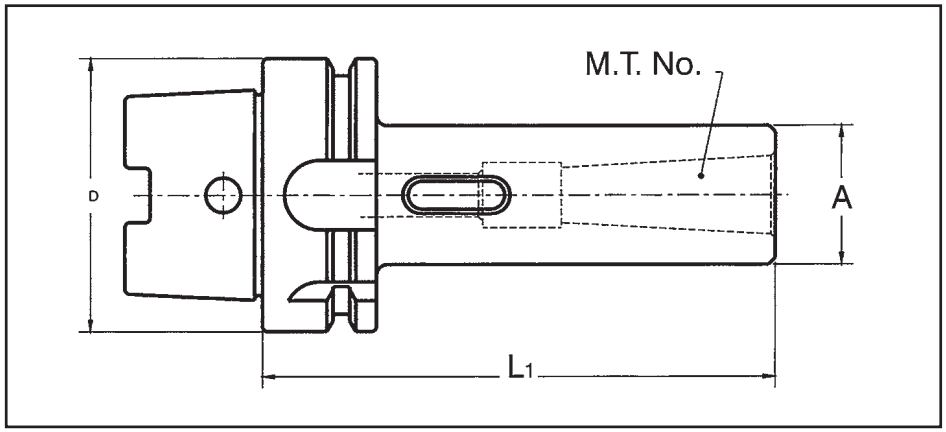

Taper	Order No.	Device Type	M.T. No.	L_1 (in)	A (in)
63	592-500A	HSK63A-MT1-100	1	3.94	0.984
63	592-505A	HSK63A-MT2-120	2	4.72	1.26
63	592-510A	HSK63A-MT3-140	3	5.51	1.57
63	592-515A	HSK63A-MT4-160	4	6.30	1.89
100	592-705A	HSK100A-MT2-120	2	4.72	1.26
100	592-710A	HSK100A-MT3-150	3	5.90	1.57
100	592-715A	HSK100A-MT4-170	4	6.69	1.89
100	592-720A	HSK100A-MT5-200	5	7.87	2.48

TECHLEADER® TOOLING INC.

Jacobs Taper Holders

BT & CT Flange Tools

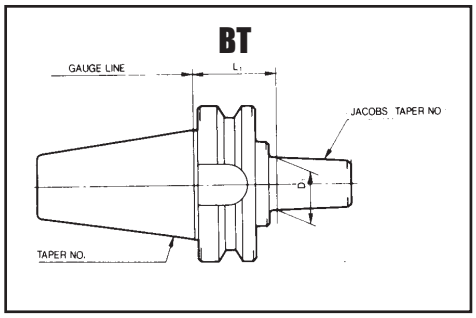

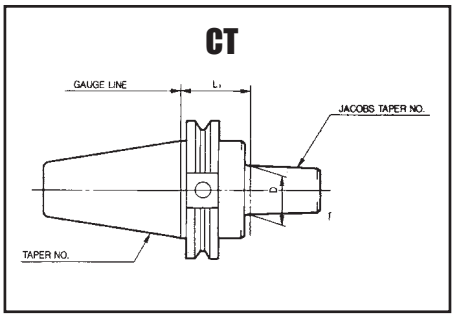

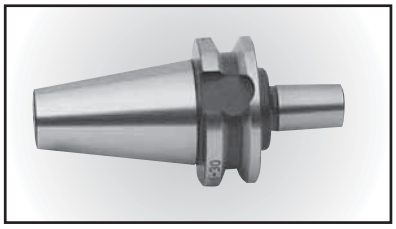

BT Flange Tool

See pages 1-44 to 1-53 for drill chuck information

Taper	Order No.	Device Type	J.T. No.	L_1 (in)	D_1 (in)
30	489-400	BT30 – JTA1 – 30	1	1.18	0.384
30	489-405	BT30 – JTA2 – 30	2	1.18	0.559
30	489-415	BT30 – JTA3 – 30	3	1.18	0.811
30	489-430	BT30 – JTA6 – 30	6	1.18	0.676
30	489-435	BT30 – JTA33 – 30	33	1.18	0.624
35	489-000*	BT35 – JTA1 – 30	1	1.18	0.384
35	489-015*	BT35 – JTA3 – 30	3	1.18	0.811
40	489-100	BT40 – JTA1 – 45	1	1.77	0.384
40	489-105	BT40 – JTA2 – 45	2	1.77	0.559
40	489-115	BT40 – JTA3 – 45	3	1.77	0.811
40	489-130	BT40 – JTA6 – 45	6	1.77	0.676
40	489-135	BT40 – JTA33 – 45	33	1.77	0.624
45	489-205*	BT45 – JTA2 – 45	2	1.77	0.559
45	489-215*	BT45 – JTA3 – 45	3	1.77	0.811
45	489-230*	BT45 – JTA6 – 45	6	1.77	0.676
50	489-300	BT50 – JTA1 – 45	1	1.77	0.384
50	489-305	BT50 – JTA2 – 45	2	1.77	0.559
50	489-315	BT50 – JTA3 – 45	3	1.77	0.811
50	489-330	BT50 – JTA6 – 45	6	1.77	0.676
50	489-335	BT50 – JTA33 – 45	33	1.77	0.624

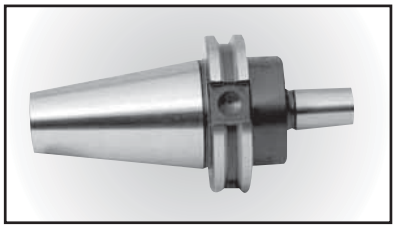

CT Flange Tool

See pages 1-44 to 1-53 for drill chuck information

Taper	Order No.	Device Type	J.T. No.	L_1 (in)	D (in)
40	490-100	CT40 – JT1 – 1.50	1	1.50	0.559
40	490-105	CT40 – JT2 – 1.50	2	1.50	0.559
40	490-115	CT40 – JT3 – 1.50	3	1.50	0.811
40	490-120	CT40 – JT4 – 1.50	4	1.50	1.124
40	490-130	CT40 – JT6 – 1.50	6	1.50	0.676
40	490-135	CT40 – JT33 – 1.50	33	1.50	0.624
45	490-205*	CT45 – JT2 – 1.50	2	1.50	0.559
45	490-215*	CT45 – JT3 – 1.50	3	1.50	0.811
45	490-235*	CT45 – JT33 – 1.50	33	1.50	0.624
50	490-305	CT50 – JT2 – 1.50	2	1.50	0.559
50	490-315	CT50 – JT3 – 1.50	3	1.50	0.811
50	490-320	CT50 – JT4 – 1.50	4	1.50	1.124
50	490-330	CT50 – JT6 – 1.50	6	1.50	0.676
50	490-335	CT50 – JT33 – 1.50	33	1.50	0.624

** While stock is still available.*

TECHLEADER® TOOLING INC.

Jacobs Taper Holders

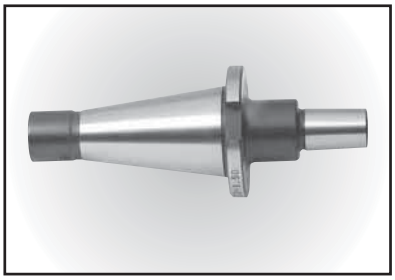

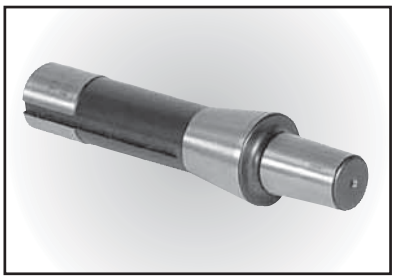

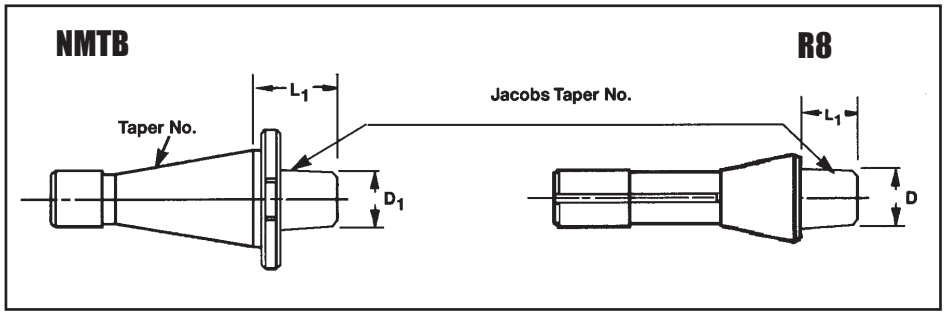

Taper	Order No.	Device Type	J.T. No.	L_1
30	690-000	NMTB30QC – JT1-1.50	1	1.50
30	690-005	NMTB30QC – JT2-1.50	2	1.50
30	690-015	NMTB30QC – JT3-1.50	3	1.50
30	690-030	NMTB30QC – JT6-1.50	6	1.50
30	690-035	NMTB30QC – JT33-1.50	33	1.50
40	690-200	NMTB40QC – JT1-1.50	1	1.50
40	690-205	NMTB40QC – JT2-1.50	2	1.50
40	690-215	NMTB40QC – JT3-1.50	3	1.50
40	690-230	NMTB40QC – JT6-1.50	6	1.50
40	690-235	NMTB40QC – JT33-1.50	33	1.50
50	690-405	NMTB50QC – JT2-2.00	2	2.00
50	690-415	NMTB50QC – JT3-2.00	3	2.00
50	690-420	NMTB50QC – JT4-2.00	4	2.00
50	690-425	NMTB50QC – JT5-2.00	5	2.00
50	690-430	NMTB50QC – JT6-2.00	6	2.00
50	690-435	NMTB50QC – JT33-2.00	33	2.00
R8	690-800	R8 – JT1	1	
R8	690-805	R8 – JT2	2	
R8	690-815	R8 – JT3	3	
R8	690-830	R8 – JT6	6	
R8	690-835	R8 – JT33	33	

R8 & NMTB-QC Flange Tools

NMTB chuck flanges are qualified for use with Erickson QC spindles

See pages 1-44 to 1-53 for drill chuck information

TECHLEADER® TOOLING INC.

Jacobs

Drill Chucks
Ball Bearing

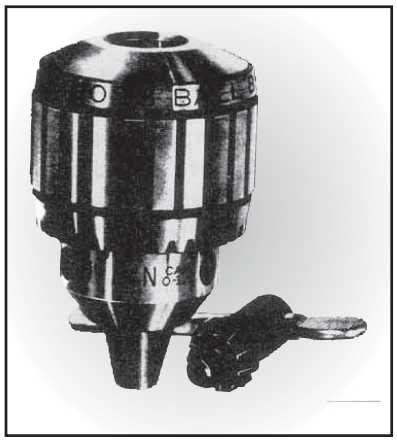

Extra accuracy, extra gripping power, for extra heavy duty work

The ball bearing super chuck is especially designed for EXTRA HEAVY DUTY drilling applications on production drilling machines, jig borers, milling machines, lathes and radials. The ideal choice for those jobs that require close tolerance drilling. The ball thrust bearing reduces friction in the chuck's closing mechanism, so the operator can apply more gripping power on the twist drill shank.

Ball Bearing Super Drill Chucks

Order No.	Chuck Model	Capacity	Tapered Mount	Uses
610-001	8-1/2N	0-1/4	2SJT	K30
610-002	11N	0-3/8	2JT	K32
610-003	14N	0-1/2	3JT	K3
610-004	16N	1/8-5/8	3JT	K4
610-005	18N	1/8-3/4	4JT	K4
610-006	20N	3/8-1	5JT	K5

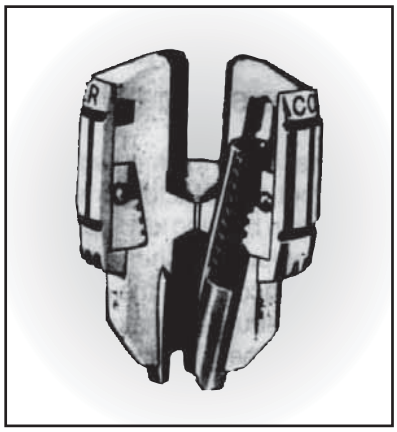

Parts for Ball Bearing Key Type Super Chucks (Older Models)

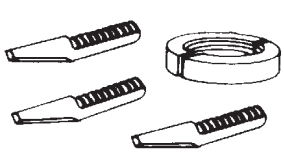

JAWS & NUTS UNITS

SLEEVE

THRUST RACE/BALLS

JAWS & NUTS UNITS		SLEEVE		THRUST RACE/BALLS	
Order No.	Part No.	Order No.	Part No.	Order No.	Part No.
610-208	U8-1/2N	610-308	S8-1/2N	610-408	T8-1/2
610-211	U11-N	610-311	S-11N	610-411	T-11
610-214	U14-N	610-314	S-14N	610-414	T-14
610-216	U16-N	610-316	S-16N	610-416	T-16
610-218	U18-N	610-318	S-18N	610-418	T-18
610-220	U20-N	610-320	S-20N	610-420	T-20

Jacobs Ball Bearing Super Drill Chucks

Service Kits (Newer Models)

Order No.	Part No.
610-30343	SC 8-1/2 N
610-30344	SC 11 N
610-30345	SC 14 N
610-30346	SC 16 N
610-30347	SC 18 N
610-30348	SC 20 N

Service kits includes:
Jaws & nuts unit, caged bearing and thrust washer.

These service kits are for new Jacobs super chuck ball bering chuck. On these new chucks they have a service kit number on the chuck nose.

TECHLEADER® TOOLING INC.

Jacobs

Drill Chucks
Plain Bearing

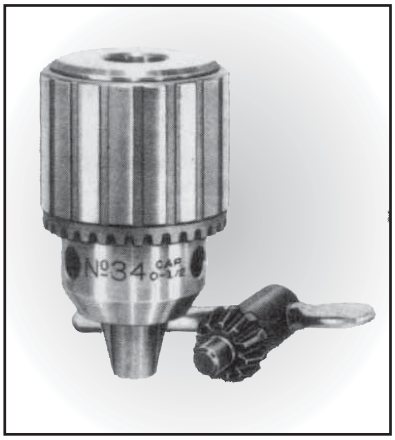

The Standard in the Power Tool Industry.

Jacobs is the most widely used drill chuck in the world. Power tool manufacturers worldwide have settled on the Jacobs plain bearing key type drill chucks as the standard for original equipment. The reason is simple: no other drill chuck offers the accuracy, the grip and the strength that Jacobs' internal construction makes possible. This fine chuck is offered for both medium duty or heavy duty portable, bench or floor type power tools in a wide range of capacities for either threaded or taper mounted spindles.

Medium Duty Models

* Equipped with a threaded locking collar which has a 1-1/16-20 thd.

Order No.	Chuck Model	Capacity	Tapered Mount	Uses Key
612-002*	0	0-5/32	0 JT	K0
612-009*	1A	0-1/4	1 JT	K1
612-035	2A	0-3/8	2 JT	K2
613-030	31-01	0-3/8	1 JT	K30
613-031	31-02	0-3/8	2 JT	K30
612-050	33	5/64-1/2	33 JT	K32
612-052	3326A	5/64-1/2	5/8 STR	K32
612-054	33KD	5/64-1/2	33 JT	K32

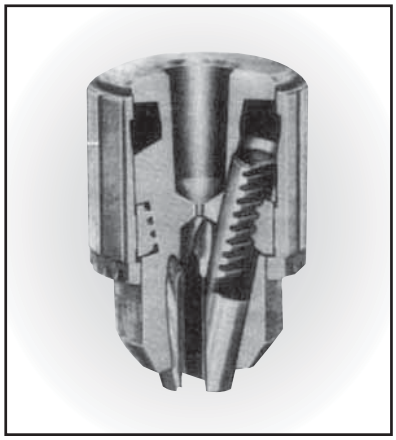

Heavy Duty Models

Order No.	Chuck Model	Capacity	Tapered Mount	Uses Key
612-065	34-02	0-1/2	2 JT	K3
612-067	34-33	0-1/2	33 JT	K3
612-068*	34-33C	0-1/2	33 JT	K3
613-075	34-06	0-1/2	6 JT	K3
613-086	3A	1/8-5/8	3 JT	K3
613-100	36	.180-.800	3 JT	K4
613-088	3KD	1/8-5/8	3 JT	K3
613-089	3PD	1/8-5/8	3 JT	K3
613-105	36KD	.180-.800	3 JT	K4
613-106	36PD	.180-.800	3 JT	K4

Taper Mounted Industrial Chucks

TECHLEADER® TOOLING INC.

Jacobs

Drill Chucks
Plain Bearing

Thread Mounted Industrial Chucks

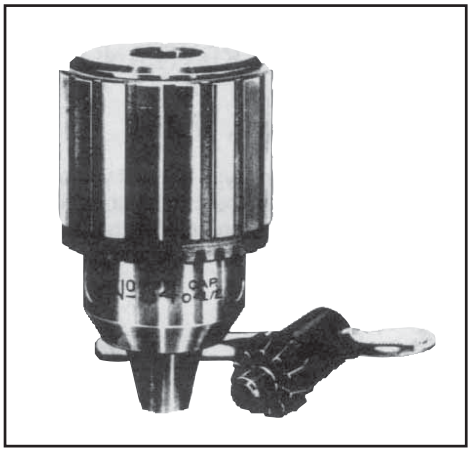

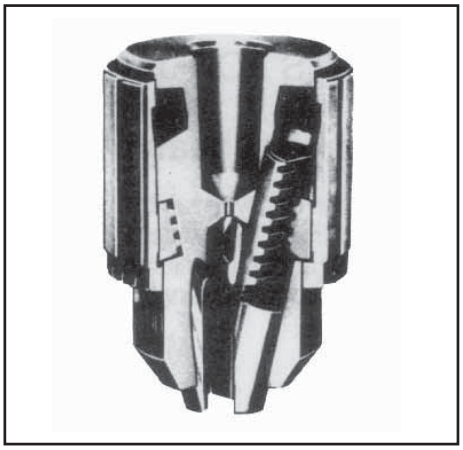

Medium Duty Models

* Equipped with a threaded locking collar which has a 1-1/16-20 thd.

Order No.	Chuck Model	Capacity	Threaded Mount	Uses Key
612-003*	OB5/16	0-5/32	5/16-24	K0
612-006*	1B3/8	0-1/4	3/8-24	K1
612-030	41BA3/8	0-3/8	3/8-24	K30
612-031*	41BA3/8S	0-3/8	3/8-24	K30
612-032	41BA1/2	0-3/8	1/2-20	K30
612-036	2BA3/8	0-3/8	3/8-24	K2
612-056	33BA3/8	5/64-1/2	3/8-24	K32
612-059	33BA1/2	5/64-1/2	1/2-20	K32
612-060	33BA5/8	5/64-1/2	5/8-16	K32

Heavy Duty Models

Order No.	Chuck Model	Capacity	Threaded Mount	Uses Key
613-017	7BA3/8	0-1/4	3/8-24	K7
613-041	32BA1/2	0-3/8	1/2-20	K32
613-091	3B5/8	0.25-5/8	5/8-16	K3
613-101	36B5/8	.188-.800	5/8-16	K4
613-102	36B3/4	.188-.800	3/4-16	K4

TECHLEADER® TOOLING INC. | Jacobs

Chuck Keys & Spare Parts

Parts for Jacobs Chuck Keys and Spare Parts

Interchangeable sleeves, jaws, nuts

You can easily repair the Jacobs plain bearing type chuck if you buy the necessary parts from your Jacobs distributor. We exercise careful control in the manufacture of Jacob chucks to guarantee the complete inter-changeability of parts. Instructions for servicing Jacobs chucks are shown on page 1-28.

* Small Sleeve

Order No.	*Jaws & Nut Unit
610-203	U3
610-233	U33
610-234	U34
610-236	U36

Order No.	Sleeve
610-303	S3
610-333	S33
610-334	S34
610-336	S36

Jacobs Chuck Keys

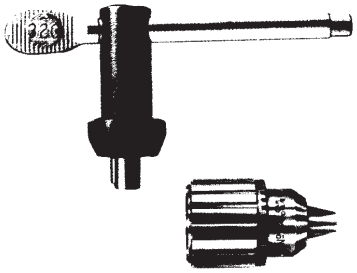

Order No.	Key No.	Chuck Models
610-100	K0	0 Series
610-100M	K0M	0 Series Stainless
610-101	K1	1 Series
610-101M	K1M	1 Series Stainless
610-102	K2	2 Series
610-103	K3	3, 6 Series & 14N
610-103C	K3C	633C & 633D
610-104	K4	36, 37 Series & 16N, 18N
610-105	K5	20N
610-107	K7	7 Series
610-130	K30	30, 31 Series & 8-1/2N
610-132	K32	32, 33 Series & 11N

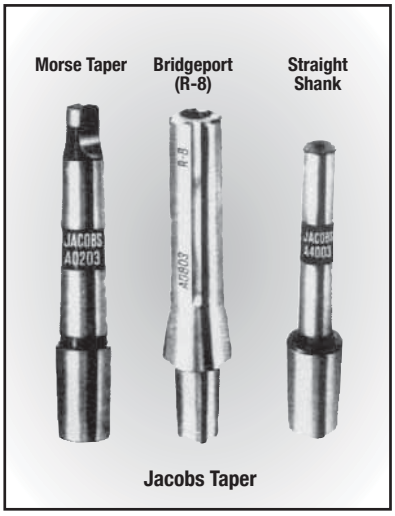

Always specify Techleader/ Jacobs arbors to secure the finest performance from Jacobs drill and tap chucks. They are precision ground to our master gauges and guarantee the finest possible accuracy and fit.

Drill Chuck Arbors

Taper Shank Arbors

* Techleader brand arbors

Shank Taper	Jacobs Taper						
	1	2	3	4	5	6	33
*#1 MORSE	620-101	620-102	N/A	N/A	N/A	620-106	620-133
*#2 MORSE	620-201	620-202	620-203	620-204	N/A	620-206	620-233
*#3 MORSE	620-301	620-302	620-303	620-304	620-305	620-306	620-333
*#4 MORSE	N/A	620-402	620-403	620-404	620-405	620-406	620-433
*#5 MORSE	N/A	N/A	620-503	620-504	620-505	N/A	N/A
*R8 (BRIDGEPORT)	690-800	690-805	690-815	N/A	N/A	690-830	690-835
*NMTB30QC	690-000	690-005	690-015	N/A	N/A	690-030	690-035
*NMTB40QC	690-200	690-205	690-215	N/A	N/A	690-230	690-235
*NMTB50QC	N/A	690-405	690-415	690-420	690-425	690-430	690-435

Straight Shank Arbors

Shank Diameter & Length	Jacobs Taper					
	0	1	2	3	6	33
1/2 x 2-1/2	624-000	624-001	624-002	624-003	624-006	624-033
5/8 x 2-1/2	N/A	624-101	624-102	624-103	624-106	624-133
3/4 x 3	N/A	N/A	624-202	624-203	624-206	624-233
1 x 3	N/A	N/A	N/A	624-303	624-306	N/A

CNC High Performance NPU-Planet Precision Keyless Drill Chucks

- Innovative "Monoblock" (one piece) design – patented.
- No self tightening system, allowing right hand and left hand rotations. Spanner wrench is supplied for final tightening to avoid loosening of tool.
- Gripping torque of 110 Newton/meter or more.
- Internal coolant supply forms B and AD in same piece. Allow maximum coolant pressure of 50 bar.
- Maximum total integrated run-out of 0.03mm/0.0012" guaranteed.
- Pre-balanced until 8,000 rpm.Optional balance service until 20,000 rpm related to G6.3 balance degree.
- Shanks available: CT, BT, HSK & DIN-69871 A/B/AD. Other shank types available on request.

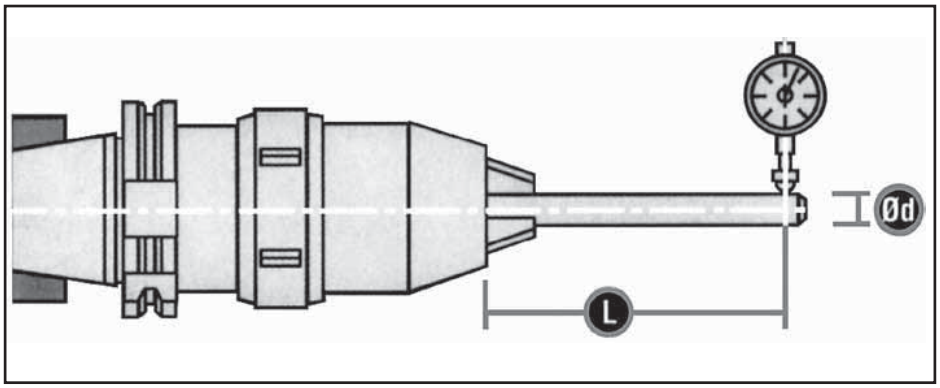

Rule for run-out evaluation

Model	Capacity mm	Capacity inches	ød mm	ød inches	L mm	L inches	Maximum Runout mm	Maximum Runout inches
PS-13 PS-13 PS-13	1-13	0.031-0.500	5 10 13	0.197 0.394 0.512	55 55 75	2.17 2.17 2.95	0.030 mm	0.0012"
PS-16 PS-16 PS-16	3-16	0.125-0.625	5 10 16	0.197 0.394 0.630	55 55 80	2.17 2.17 3.15	0.030 mm	0.0012"

TECHLEADER® TOOLING INC.

LLAMBRICH

CNC High Performance NPU-Planet Precision Keyless Drill Chucks

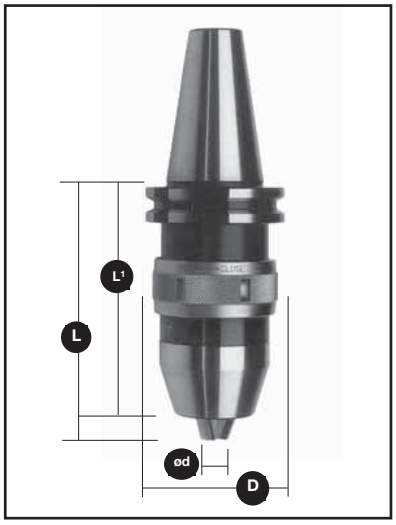

CT-FLANGE

Taper	Order No.	Device Type	Capacity Range ød				Dimensions					
			Minimum		Maximum		Closed (L)		Open L_1		Sleeve dia (D)	
			inches	mm	inches	mm	inches	mm	inches	mm	inches	mm
40	486-208	CT40-PS08A	0.000	0	0.3125	8	3.90	99	3.62	92	1.57	40
40	486-209	CT40-PS08AD	0.000	0	0.3125	8	3.90	99	3.62	92	1.57	40
40	486-210	CT40-PS08B	0.000	0	0.3125	8	3.90	99	3.62	92	1.57	40
40	486-213	CT40-PS13A	0.031	1	0.500	13	4.92	125	4.45	113	2.25	57
40	486-214	CT40-PS13AD	0.031	1	0.500	13	4.92	125	4.45	113	2.25	57
40	486-215	CT40-PS13B	0.031	1	0.500	13	4.92	125	4.45	113	2.25	57
40	486-216	CT40-PS16A	0.125	3	0.625	16	5.00	127	4.53	115	2.25	57
40	486-217	CT40-PS16AD	0.125	3	0.625	16	5.00	127	4.53	115	2.25	57
40	486-218	CT40-PS16B	0.125	3	0.625	16	5.00	127	4.53	115	2.25	57
50	486-413	CT50-PS13A	0.031	1	0.500	13	4.13	105	3.66	93	2.25	57
50	486-414	CT50-PS13AD	0.031	1	0.500	13	4.13	105	3.66	93	2.25	57
50	486-415	CT50-PS13B	0.031	1	0.500	13	4.13	105	3.66	93	2.25	57
50	486-416	CT50-PS16A	0.125	3	0.625	16	4.21	107	3.78	96	2.25	57
50	486-417	CT50-PS16AD	0.125	3	0.625	16	4.21	107	3.78	96	2.25	57
50	486-418	CT50-PS16B	0.125	3	0.625	16	4.21	107	3.78	96	2.25	57

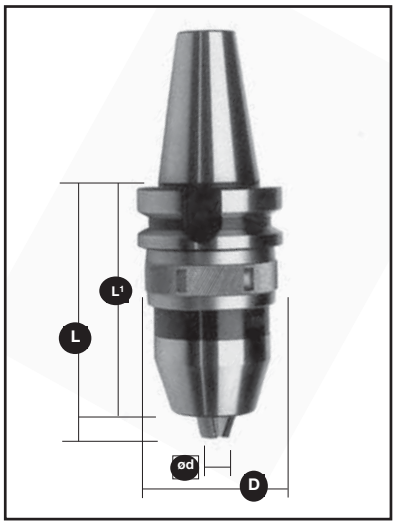

BT-FLANGE

Taper	Order No.	Device Type	Capacity Range ød				Dimensions					
			Minimum		Maximum		Closed (L)		Open L_1		Sleeve dia (D)	
			inches	mm	inches	mm	inches	mm	inches	mm	inches	mm
40	485-208	BT40-PS08A	0.000	0	0.3125	8	3.23	82	2.95	75	1.57	40
40	485-209	BT40-PS08AD	0.000	0	0.3125	8	3.23	82	2.95	75	1.57	40
40	485-210	BT40-PS08B	0.000	0	0.3125	8	3.23	82	2.95	75	1.57	40
40	485-213	BT40-PS13A	0.031	1	0.500	13	4.33	110	3.90	99	2.25	57
40	485-214	BT40-PS13AD	0.031	1	0.500	13	4.33	110	3.90	99	2.25	57
40	485-215	BT40-PS13B	0.031	1	0.500	13	4.33	110	3.90	99	2.25	57
40	485-216	BT40-PS16A	0.125	3	0.625	16	4.41	112	3.98	101	2.25	57
40	485-217	BT40-PS16AD	0.125	3	0.625	16	4.41	112	3.98	101	2.25	57
40	485-218	BT40-PS16B	0.125	3	0.625	16	4.41	112	3.98	101	2.25	57
50	485-413	BT50-PS13A	0.031	1	0.500	13	4.80	122	4.33	110	2.25	57
50	485-414	BT50-PS13AD	0.031	1	0.500	13	4.80	122	4.33	110	2.25	57
50	485-415	BT50-PS13B	0.031	1	0.500	13	4.80	122	4.33	110	2.25	57
50	485-416	BT50-PS16A	0.125	3	0.625	16	4.76	121	4.33	110	2.25	57
50	485-417	BT50-PS16AD	0.125	3	0.625	16	4.76	121	4.33	110	2.25	57
50	485-418	BT50-PS16B	0.125	3	0.625	16	4.76	121	4.33	110	2.25	57

INTERNAL COOLING STYLES

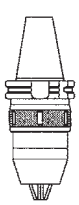

A: NONE

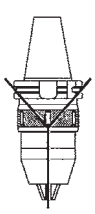

B: LATERAL

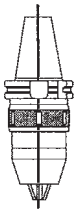

AD; CENTRAL

DIN 69871-B

NPU CNC Precision Keyless Drill Chucks

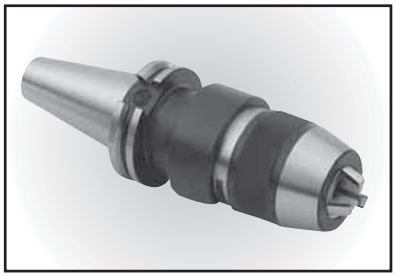

- **Supplementary Gripping Torque**
- **Self Tightening**

By light key tightening, Techleader obtains 2.5 to 3 times increased gripping torque compared to tightening by hand

- **Use in high speed CNC machines with right hand rotation and instant spindle stop.**
- **Use on boring, drilling, milling, counterboring, etc. operations with heavy penetration.**

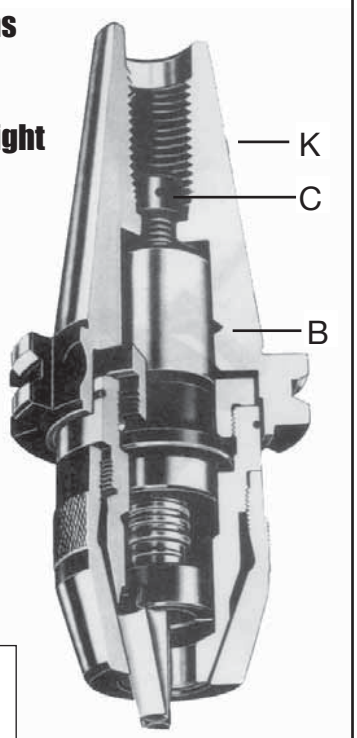

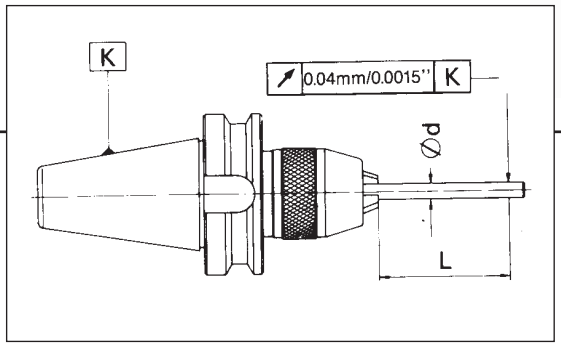

HIGH CONCENTRICITY

Model	Ø d mm	L mm	Maximum Runout mm	Maximum Runout inches
NPU 08	3	35	0.040 mm	0.0016”
	6			
	8	50		
NPU 13	5	55	0.040 mm	0.0016”
	10			
	13	75		
NPU 16	5	55	0.040 mm	0.0016”
	10			
	16	80		

TECHLEADER® TOOLING INC.

LLAMBRICH

NPU CNC Precision Keyless Drill Chucks

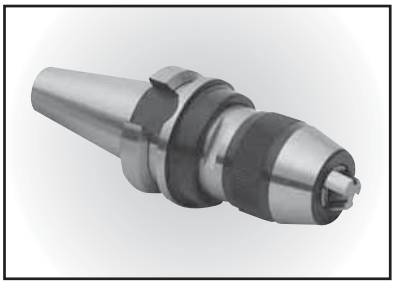

BT Flange

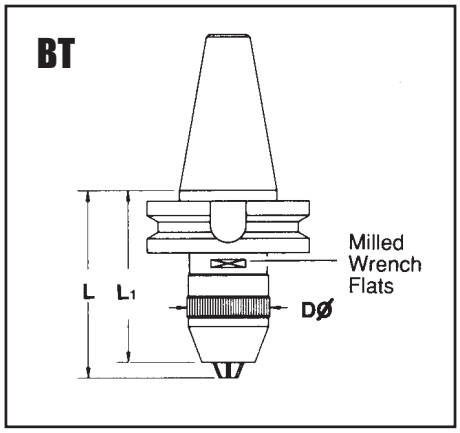

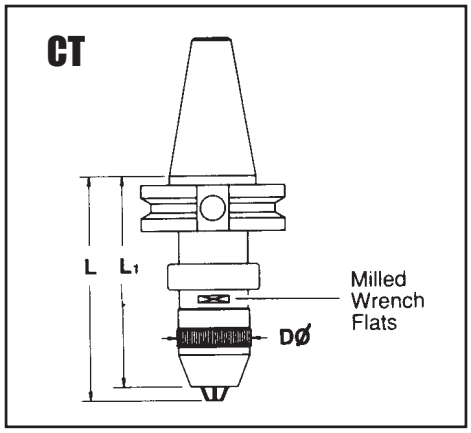

Taper	Order No.	Device Type	Capacity Range				Dimensions					
			Minimum		Maximum		Closed (L)		Open L_1		Sleeve dia (D)	
			inches	mm	inches	mm	inches	mm	inches	mm	inches	mm
30	487-008	BT30-NPU-08	0	0	0.315	8	3.11	79	2.87	73	1.46	37
30	487-010	BT30-NPU-10	0	0	0.394	10	3.50	89	3.82	97	1.69	43
40	487-208	BT40-NPU-08	0	0	0.315	8	3.31	84	3.07	78	1.46	37
40	487-209	BT40-NPU-08L	0	0	0.315	8	4.49	114	4.25	108	1.46	37
40	487-210	BT40-NPU-10	0	0	0.394	10	3.11	79	3.42	87	1.69	43
40	487-211	BT40-NPU-10L	0	0	0.394	10	4.29	109	4.60	117	1.69	43
40	487-213	BT40-NPU-13	0.039	1	0.512	13	3.82	97	3.39	86	1.89	48
40	487-214	BT40-NPU-13L	0.039	1	0.512	13	5.79	147	5.35	136	1.89	48
40	487-216	BT40-NPU-16	0.118	3	0.630	16	4.57	116	4.13	105	2.17	55
45	487-313	BT45-NPU-13	0.039	1	0.512	13	4.06	103	3.62	92	1.89	48
50	487-413	BT50-NPU-13	0.039	1	0.512	13	4.25	108	3.82	97	1.89	48
50	487-416	BT50-NPU-16	0.118	3	0.630	95	4.17	106	3.74	95	2.17	55
50	487-417	BT50-NPU-16L	0.118	3	0.630	16	6.14	156	5.71	145	2.17	55

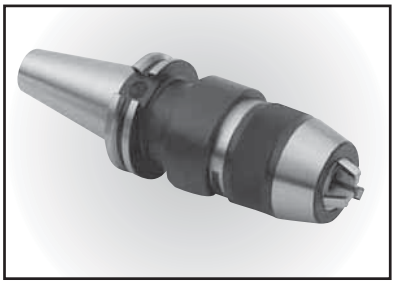

CT Flange

Taper	Order No.	Device Type	Capacity Range				Dimensions					
			Minimum		Maximum		Closed (L)		Open L_1		Sleeve dia (D)	
			inches	mm	inches	mm	inches	mm	inches	mm	inches	mm
30	488-008	CT30-NPU-08	0	0	0.315	8	4.21	107	3.98	101	1.46	37
40	488-208	CT40-NPU-08	0	0	0.315	8	3.46	88	3.23	82	1.46	37
40	488-213	CT40-NPU-13	0.039	1	0.512	13	4.96	126	4.53	115	1.89	48
40	488-216	CT40-NPU-16	0.118	1	0.630	16	4.21	107	3.78	96	1.89	48
45	488-313	CT45-NPU-13	0.118	3	0.630	16	5.16	131	4.72	120	2.17	55
50	488-413	CT50-NPU-13	0.039	1	0.512	13	4.21	107	3.78	96	1.89	48
50	488-416	CT50-NPU-16	0.118	3	0.630	16	4.13	105	3.70	94	2.17	55

TECHLEADER® TOOLING INC. | LLAMBRICH

SP Precision Keyless Drill Chucks

- Self tightening feature automatically increases gripping force proportional to increased torque to prevent tool shank slippage. For right hand rotation applications only (left hand rotation available on request).
- Permits use on high accuracy drill presses, jig borers, milling machines and production drilling equipment.
- All components exposed to wear are completely hardened to maintain accuracy and extend chuck life.
- 100% of SP drill chucks are individually controlled to not exceed a maximum total integrated run-out of 0.04 mm/0.0015".
- Holding capacities up to 16 mm. diameter bits.
- Mounts available: DIN-238 tapers, Jacobs tapers, UNF threads.

SP - High Precision Model

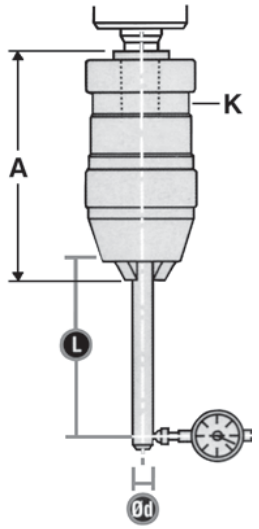

Rule for run-out evaluation

Model	Capacity mm	Ød mm	L mm	Maximum Runout
SP-06	0-6.5	3 6	35 35	0.040 mm
0.0015"				
SP-08	0-8	3 6 8	35 35 50	0.040 mm 0.0015"
SP-10	0-10	3 6 10	35 35 60	0.040 mm 0.0015"
SP-13	0-13	5 10 13	55 55 75	0.040 mm 0.0015"
SP-16	0-16	5 10 16	55 55 80	0.040 mm
0.0015"				

Order No.	Device Type	Capacity Range				Dimensions			
		Minimum		Maximum		Taper Mount K	Dia MM D	A	
		inches	mm	inches	mm			Min. MM	Max. MM
616-506	SP03J0	0	0	0.118	3	JT0	24.5	44	47.5
616-507	SP03J1	0	0	0.118	3	JT1	24.5	44	47.5
616-515	SPO6J1	0	0	0.236	6	JT1	31	62	70
616-524	SPO8J1	0	0	0.315	8	JT1	37	67	74
616-525	SP08J25	0	0	0.315	8	J2S	37	67	74
616-530	SP10J33	0	0	0.394	10	JT33	41	81	89
616-531	SP10J2	0	0	0.394	10	JT2	41	81	89
616-540	SP13J33	0.039	1	0.512	13	JT33	46	88	99
616-541	SP13J2	0.039	1	0.512	13	JT2	46	88	99
616-542	SP13J6	0.039	1	0.512	13	JT6	46	88	99
616-550	SP16J6	0.118	3	0.630	16	JT6	55	95	107

TECHLEADER® TOOLING INC. | LLAMBRICH

SPX Precision Keyless Drill Chucks - High Torque

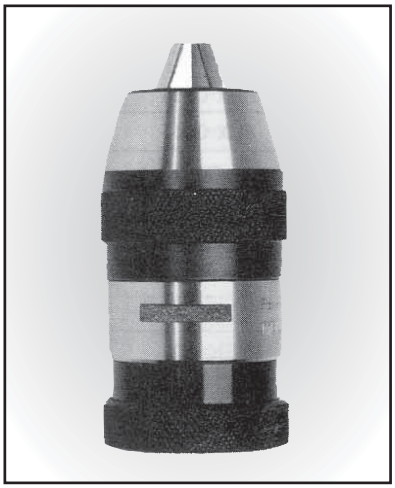

- Self tightening feature automatically increases gripping force proportional to increased torque to prevent tool shank slippage. For right hand rotation applications only (left hand rotation available on request).
- For use on CNC machining centers in drilling, boring, counter-boring and milling operations requiring heavy penetration.
- Furnished with milled wrench flats and spanner wrench to allow application of supplementary gripping torque. Light tightening increases gripping torque up to 3 times higher than hand tightening.
- Resist tool loosening on high speed machines with instant spindle stop.
- 100% of SPX drill chucks are individually controlled to not exceed a maximum total integrated run-out of 0.04 mm/0.0015".
- Holding capacities up to 16 mm. diameter bits.
- Mounts available: DIN-238 tapers, Jacobs tapers.

SPX - High Torque & Precision Model

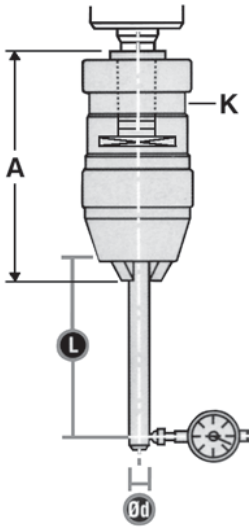

Rule for run-out evaluation

Model	Capacity mm	ød mm	L mm	Maximum Runout
SPX-06	0-6.5	3 6	35 35	0.040 mm 0.0015"
SPX-08	0-8	3 6 8	35 35 50	0.040 mm 0.0015"
SPX-10	0-10	3 6 10	35 35 60	0.040 mm 0.0015"
SPX-13	0-13	5 10 13	55 55 75	0.040 mm 0.0015"
SPX-16	0-16	5 10 16	55 55 80	0.040 mm 0.0015"

Order No.	Device Type	Capacity Range				Dimensions			
		Minimum		Maximum		Taper Mount K	Dia MM D	A	
		inches	mm	inches	mm			Min. MM	Max. MM
617-515	SPXO6J1	0	0	0.236	6	JT1	31	62	70
617-524	SPX08J1	0	0	0.315	8	J1	37	67	74
617-525	SPXO8J2S	0	0	0.315	8	JT2S	37	67	74
617-530	SPX10J33	0	0	0.394	10	JT33	43	81.5	90
617-531	SPX10J2	0	0	0.394	10	JT2	43	81.5	90
617-540	SPX13J33	0.039	1	0.512	13	JT33	46	88	99
617-542	SPX13J6	0.039	1	0.512	13	JT6	46	88	99
617-550	SPX16J6	0.118	3	0.630	16	JT6	55	95	107

TECHLEADER® TOOLING INC. | LLAMBRICH

SPS Keyless Drill Chucks

- The SPS-SOLID is a high precision keyless drill chuck, with the advantage that the arbor is integrated into the internal socket of the drill chuck.
- This integrated design makes it impossible for the arbor and the drill chuck to become accidentally separated, providing a unit of greater solidity and precision with, as a result of its compact design, accumulated run-out reduced to a minimum.
- Self-Tightening feature automatically increases gripping force proportional in increased torque to prevent tool shank slippage. For right hand rotation applications only.
- Furnished with milled wrench flats and spanner wrench to allow application of supplementary gripping torque. Light tightening increases gripping torque up to 3 times higher than hand tightening. Resist tool loosening on high speed machines with instant spindle stop.
- 100% of SPS-SOLID drill chucks are individually controlled to not exceed a maximum total integrated run-out of 0.04 mm/0.0016".

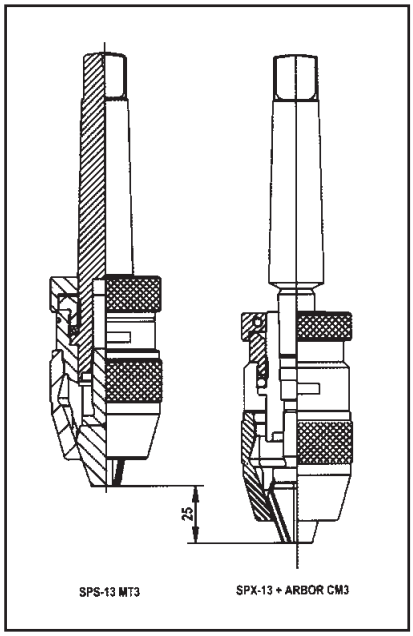

Model SPS-SOLID with INTEGRAL SHANKS MORSE TAPER

Taper$_K$	Order No.	Device Type	CAPACITY RANGE ød minimum Inches	minimum mm	maximum Inches	maximum mm	DIMENSIONS closed (L) Inches	closed (L) mm	open L$_1$ Inches	open L$_1$ mm	SLEEVE Dia (D) Inches	SLEEVE Dia (D) mm
MT2	618-082	SPS08-MT2	0	0	0.3125"	8	2.83"	72	2.56"	65	1.44"	36.5
MT2	618-102	SPS10-MT2	0	0	0.375"	10	3.23"	82	2.87"	73	1.69"	43
MT2	618-132	SPS13-MT2	0.031"	1	0.500"	13	3.62"	92	3.15"	80	1.91"	48.5
MT3	618-133	SPS13-MT3	0.031"	1	0.500"	13	3.62"	92	3.15"	80	1.91"	48.5
MT4	618-134	SPS13-MT4	0.031"	1	0.500"	13	3.62"	92	3.15"	80	1.91"	48.5
MT2	618-162	SPS16-MT2	0.125"	3	0.625"	16	3.78"	96	3.35"	85	2.15"	54.5
MT3	618-163	SPS16-MT3	0.125"	3	0.625"	16	3.78"	96	3.35"	85	2.15"	54.5
MT4	618-164	SPS16-MT4	0.125"	3	0.625"	16	3.78"	96	3.35"	85	2.15"	54.5

R8 TAPER

Taper$_K$	Order No.	Device Type	CAPACITY RANGE ød minimum Inches	minimum mm	maximum Inches	maximum mm	DIMENSIONS closed (L) Inches	closed (L) mm	open L$_1$ Inches	open L$_1$ mm	SLEEVE Dia (D) Inches	SLEEVE Dia (D) mm
R8	618-138	SPS13-R8	0.031"	1	0.500"	13	3.23”	82	3.54”	90	1.91”	48.5
R8	618-168	SPS16-R8	0.125"	3	0.625"	16	3.43”	87	3.86”	98	2.15”	54

R8 TAPER

TECHLEADER® TOOLING INC.

LLAMBRICH

Spare Parts

For SP, SPX, NPU, SPS & Planet Drill Chucks

Jaws - set of 3

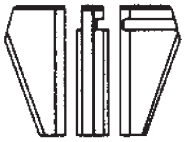

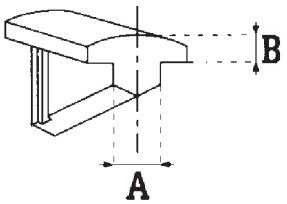

Screw

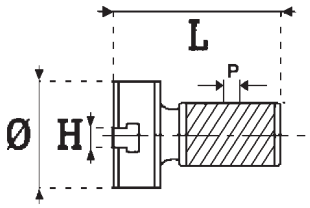

Hood

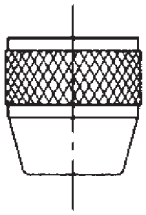

Wrench

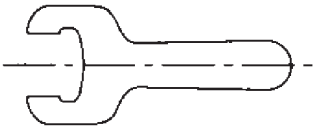

JAWS

Drill Chuck Model	Sizes A x B (mm)	Order No.
SP-03	2.5 X 1.5	SP-03061
SP-06 / SPX-06	3.75 X 1.5	SP-06061
SP-08 / SPX-08 NPU-08/SPS-08	4.4 x 1.5 4.4 x 2.5	SP-08061 SP-08062
SP-10 / SPX-10 NPU-10/SPS-10	4.4 x 1.5 4.4 x 2.5	SP-10060 SP-10061
SP-13 / SPX-13 NPU-13/SPS-13	5 x 1.5 5 x 2.5	SP-13061 SP-13062
SP-16 / SPX-16 NPU-16/SPS-16	5 x 2.5	SP-16062

SCREW, HOOD & WRENCH

Drill Chuck Model	Screw* Order No.	Hood Order No.	Wrench Order No.
SP-03	SP-0305	SP-0304	—
SP-06	SP-0605	SP-0604	—
SP-08	SP-0805	SP-0804	—
SP-10	SP-1005	SP-1004	—
SP-13	SP-1305	SP-1304	—
SP-16	SP-1605	SP-1604	—
SPX-06	SP-0605	SP-0604	SPX-0612
SPX-08	SP-0805	SP-0804	SPX-0812
SPX-10	SP-1005	SP-1004	SPX-1012
SPX-13	SP-1305	SP-1304	SPX-1312
SPX-16	SP-1605	SP-1604	SPX-1612
NPU-08	NPU-0805	SP-0804	SPX-0812
NPU-10	SP-1005	SP-1004	SPX-1012
NPU-13**	SP-13051**	—	—
NPU-13*	NPU-1305*	SP-1304	SPX-1312
NPU-16	NPU-1605	SP-1604	SPX-1612
SPS-08	NPU-0805	SP-0804	SPX-0812
SPS-10	SP-1005	SP-1004	SPX-1012
SPS-13	SP-1305*	SP-1304	SPX-1312
SPS-16	NPU-1605	SP-1604	SPX-1612

Sizes ''H'', ''L'' and Ø should be indicated when ordering for Screws

* P = 3mm
** P = 2.25mm (for model NPU13 from May 2000}

Spare Parts for NPU-Planet Drill Chucks

Spare Part	For Model PS13 cap.1/13mm	For Model PS16 cap.1/16mm
Jaws (set of 3)	SP-13062	SP-16062
Screw	PS-1305	PS-1605
Screw (through coolant)	PS-1305-R	PS-1605-R
Hood	PS-1304	PS-1604
Key	PS-1312	PS-1612
Gripping ring	PS-1303	PS-1603
Set of Planet gears (4)	PS-1307	PS-1607
Set of joints (3) (17x1,5 -17x2 -11x1.5)	PS-1314	PS-1614
Drill retainer (8x16x7)	PS-1316	PS-1616

NPU Planet Drill Chuck

Parts Diagram

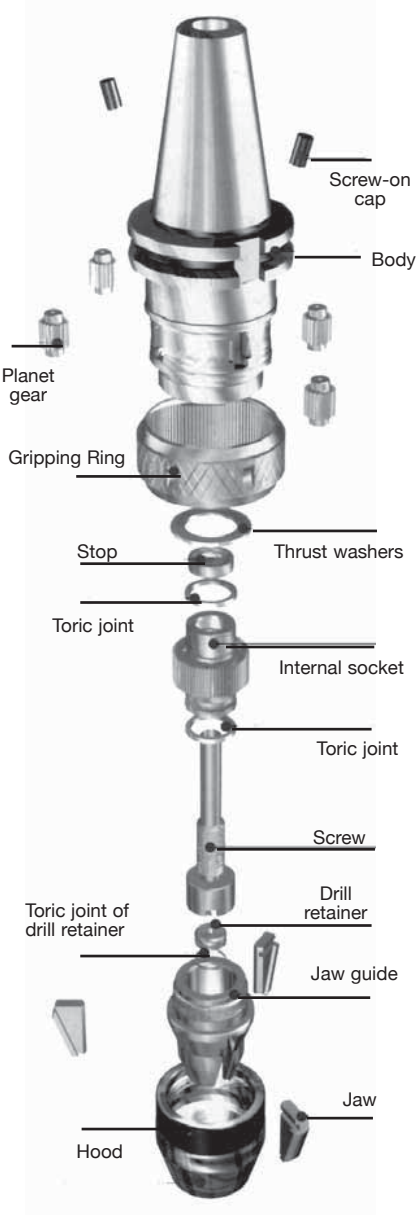

TECHLEADER® TOOLING INC.

Modular Tappers

Rigid and Tension & Compression

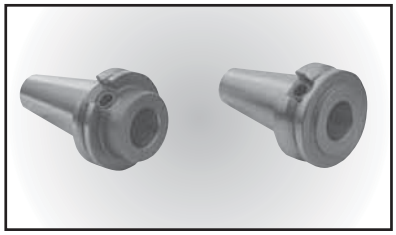

BT & CT Flange Tools

Tap Collets
See Page 3-37, 3-38

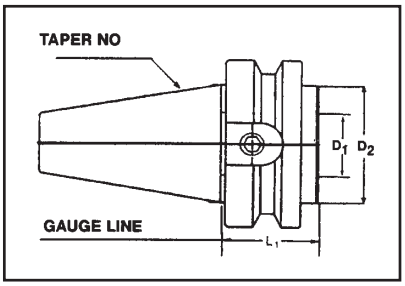

BT Shanks

Taper	Order No.	Device	L_1	D_1	D_2
30	493-B3010	BT30-1	2.205	1	2.125
35	493-B3510	BT35-1	2.047	1	2.125
40	493-B4010	BT40-1	1.181	1	1.732
40	493-B4015	BT40-1-1/2	3.937	1-1/2	2.442
50	493-B5010	BT50-1	1.574	1	2.755
50	493-B5015	BT50-1-1/2	1.968	1-1/2	2.755

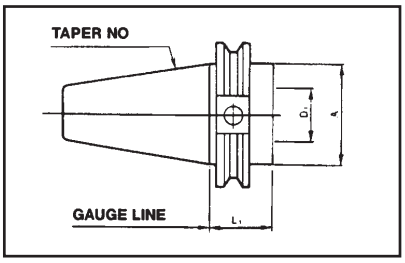

CT Shanks

Taper	Order No.	Device	L_1	D_1	D_2
40	494-C4010	CT40-1	1.378	1	1.75
40	494-C4015	CT40-1-1/2	3.937	1-1/2	2.442
45	494-C4510	CT45-1	1.378	1	2.25
50	494-C5010	CT50-1	1.378	1	2.75
50	494-C5015	CT50-1-1/2	1.614	1-1/2	2.75

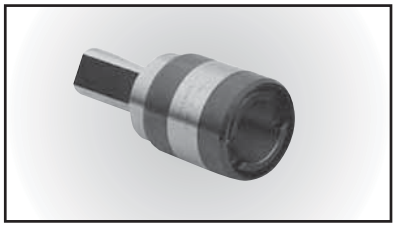

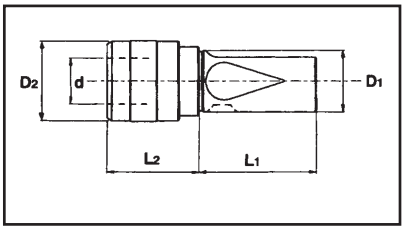

Rigid Tap Holders Straight Shank

Order No.	D_1 (-)	L_1 (-)	L_2 (-)	D_2 (-)	Tap Capacity d
494-000-F	1	2.00	1.575	1.291	#0-9/16" M3-M12 1/8" NPT
494-010-F	1	2.00	2.480	1.976	5/16"-7/8" M6-M20 1/4"-1/2"NPT
494-030-F	1-1/2	3.50	3.425	2.834	13/16"-1-3/8" M14-M36 1/2"-1" NPT

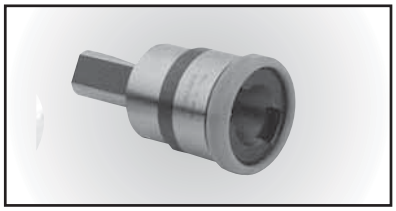

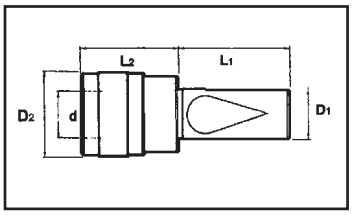

Tension & Compression Tap Holders Straight Shank

Order No.	D_1 (-)	L_1 (-)	L_2 (-)	D_2 (-)	COMPRN. Return	COMPRN. Extension	Tap Capacity d
494-000	1	2.205	1.614	1.496	0.354	0.354	#0-9/16" M3-M12 1/8 NPT
494-010	1	2.205	2.480	2.165	0.590	0.590	5/16"-7/8" M6-M20 1/4"-1/2" NPT
494-030	1-1/2	3.50	3.80	3.115	0.945	0.945	13/16"-1-3/8" M14-M36 1/2"-1"NPT
494-040	1-1/2	3.50	4.307	3.858	1.02	1.02	1-1/8"-1-7/8" M22-M48 1-1/4"-1-1/2"NPT

TECHLEADER® TOOLING INC.

Rigid Tap Holder

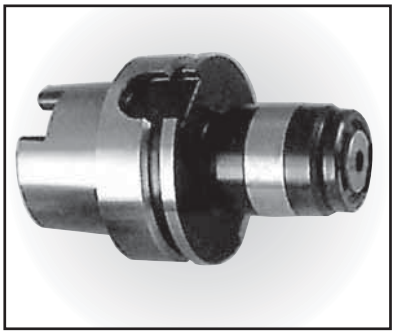

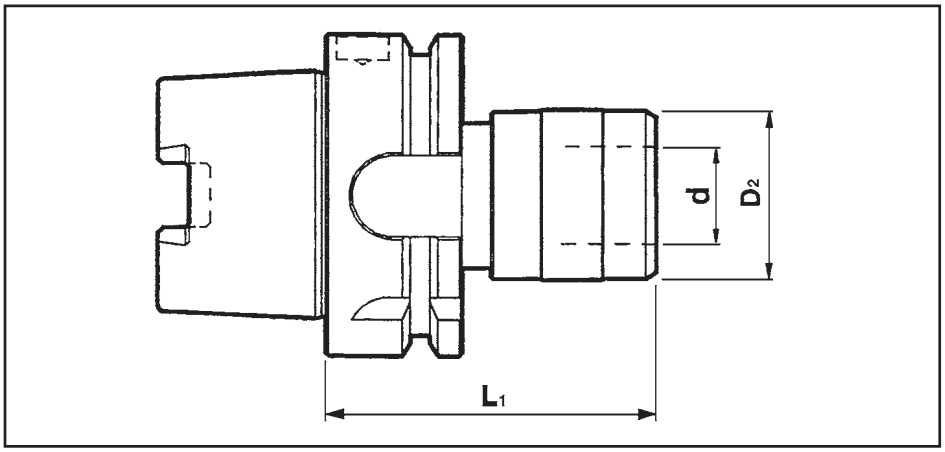

HSK-A

Tap Collets
See Page 3-37, 3-38

Taper	Order No.	Device Type	L_1 (in)	D_2 (in)	dØ inch Tap Capacity
63	594-500AF	HSK 63A-RT-1	2.48	1.30	0.748” Ø 0-9/16” M1-M12 1/8”-NPT
63	594-505AF	HSK 63A-RT-2	3.75	1.97	1.22” Ø 5/16”-7/8” M6-M20 1/4” - 1/2” NPT
100	594-700AF	HSK 100A-RT-1	2.75	1.30	0.748” Ø 0 - 9/16” M1-M12 1/8” NPT
100	594-705AF	HSK 100A-RT-2	3.54	1.97	1.22” Ø 5/16” - 7/8” M6 - M20 1/4”-1/2” NPT
100	594-710AF	HSK 100A-RT-3	4.57	32.83	1.89” Ø 13/16” - 1-3/8” M14 - M36 3/4”-1” NPT

TAPPING PROBLEMS?

CONTACT US FOR UNIQUE TAPPING SOLUTIONS.

USE HIGH PERFORMANCE TAPS FROM

DC®

THREADING TECHNOLOGY

SWISS MADE

TECHLEADER® TOOLING INC.

Floating Tap Holder

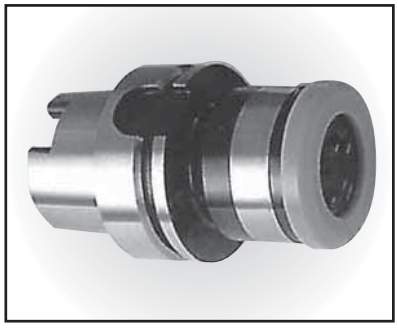

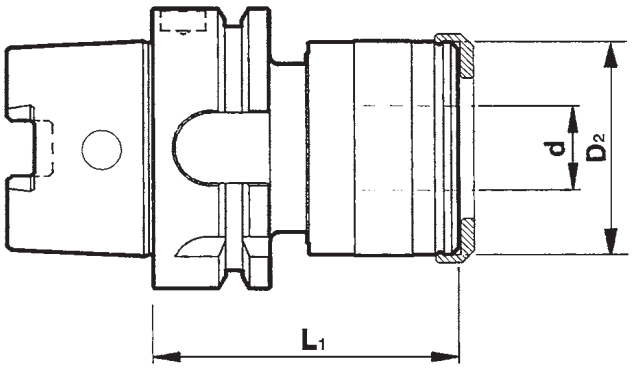

HSK-A

Tap Collets
See Page 3-37, 3-38

Taper	Order No.	Device Type	L_1 (in)	D_2 (in)	COMPEN		dØ inch Tap Capacity
					RETURN	EXTENSION	
63	594-500A	HSK 63A-FT-1	2.63	1.89	0.295	0.295	0.748” Ø 0-9/16” M1-M12 1/8”-NPT
63	594-505A	HSK 63A-FT-2	4.21	2.36	0.492	0.492	1.22” Ø 5/16”-7/8” M6-M20 1/4”-1/2” NPT
100	594-700A	HSK 100A-FT-1	5.11	1.89	0.295	0.295	0.748” Ø 0 - 9/16” M1-M12 1/8” NPT
100	594-705A	HSK 100A-FT-2	6.02	2.36	0.492	0.492	1.22” Ø 5/16” - 7/8” M6 - M20 1/4”-1/2” NPT
100	594-710A	HSK 100A-FT-3	8.46	3.07	0.787	0.787	1.89” Ø 13/16” - 1-3/8” M14 - M36 3/4”-1” NPT

TAPPING PROBLEMS?

CONTACT US FOR UNIQUE TAPPING SOLUTIONS.

USE HIGH PERFORMANCE TAPS FROM

DC®

THREADING TECHNOLOGY

SWISS MADE

TECHLEADER® TOOLING INC.

Morse Tapers Tappers

Tension & Compression

Tapping Chuck with Morse Cone DIN 228-B with axial tension compression

Tap Collets
See Page 3-37, 3-38

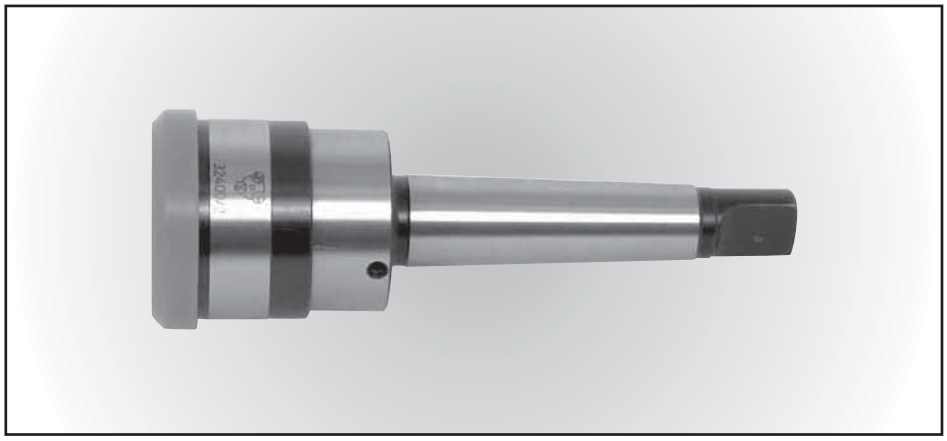

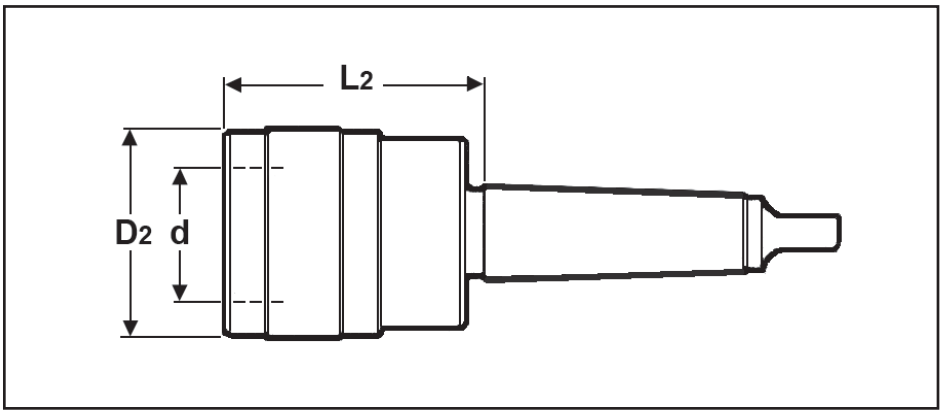

TAPPING PROBLEMS?

CONTACT US FOR UNIQUE TAPPING SOLUTIONS.

USE HIGH PERFORMANCE TAPS FROM

DC® THREADING TECHNOLOGY

SWISS MADE

Order No.	Devise Type	Morse Taper	L_2 (mm)	D_2 (mm)	COMPRESSION		Tap Capacity d
					RETURN (mm)	EXTENSION (mm)	
495-102 495-103	32400/2 32400/3	2 3	46 46	38 38	9	9	#0-9/16" M3-M12 1/8 NPT
495-203 495-204	32600/3 32600/4	3 4	69 70	55 55	15	15	5/16"-7/8" M6-M20 1/4"-1/2" NPT
495-304 495-305	32800/4 32800/5	4 5	108 103	79 79	24	24	13/16"-1-3/8" M14-M36 1/2"-1"NPT
495-405	32900/5	5	116	98	26	26	1-1/8"-1-7/8" M22-M48 1-1/4"-1-1/2"NPT

TECHLEADER® TOOLING INC.

Boring Head Adapters & Boring Bar Blanks

Boring Head Adapters

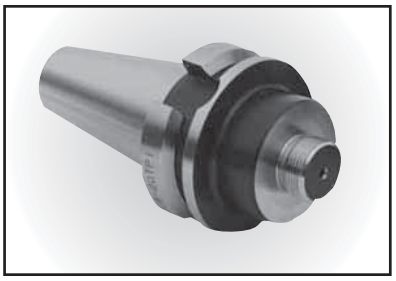

BT & CT Flange Tools

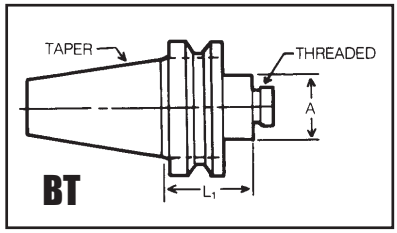

Taper	Order No.	Device Type	Thread	L_1(in)	A (in)
40	497-110	BT40 - 7/8-20	7/8-20	1.75	1.75
40	497-115	BT40 - 1-1/2-18	1-1/2-18	1.75	1.75
50	497-310	BT50 - 7/8-20	7/8-20	1.75	1.75
50	497-315	BT50 - 1-1/2-18	1-1/2-18	1.75	1.75

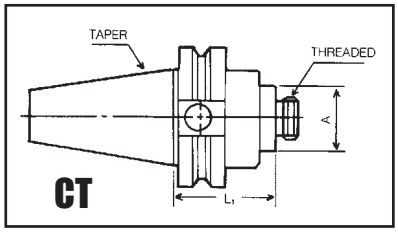

Taper	Order No.	Device Type	Thread	L_1(in)	A (in)
40	498-110	CT40 - 7/8-20	7/8-20	1.75	1.75
40	498-115	CT40 - 1-1/2-18	1-1/2-18	1.75	1.75
50	498-310	CT50 - 7/8-20	7/8-20	1.75	1.75
50	498-315	CT50 - 1-1/2-18	1-1/2-18	1.75	1.75

Boring Bar Blanks

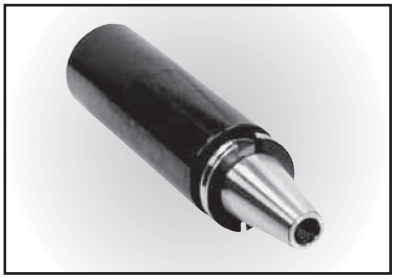

BT & CT Flange Tools

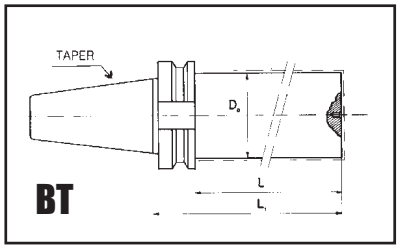

Taper	Order No.	Device Type	D_0	L (in)	L_1(in)
40	507-899	BT40 - BBB-6225	2.50	11.875	13.00
50	507-991	BT50 - BBB-9025	4.00	11.570	13.00

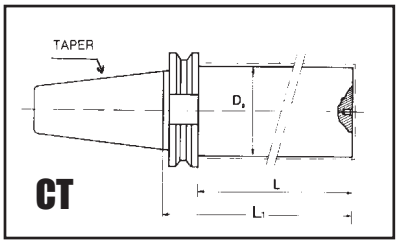

Taper	Order No.	Device Type	D_0	L (in)	L_1(in)
40	509-899	CT40 - BBB-6225	2.50	12.00	13.00
50	509-991	CT50 - BBB-9025	4.00	11.570	13.00

TECHLEADER® TOOLING INC.

Toolholder Blanks

HSK-A Flange Tools

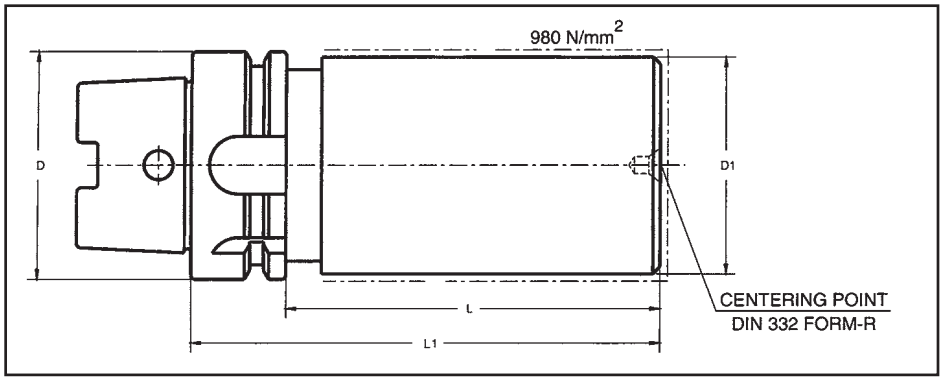

Taper	Order No.	Device Type	D_1 (mm)	L (mm)	L_1 (mm)
40	599-300A	HSK40A-THB4010	40	80	100
50	599-400A	HSK50A-THB5010	50	74	100
50	599-405A	HSK50A-THB6316	63	134	160
63	599-500A	HSK63A-THB6310	63	74	100
63	599-505A	HSK63A-THB8016	80	134	160
63	599-510A	HSK63A-THB8025	80	224	250
80	599-600A	HSK80A-THB8016	80	134	160
100	599-700A	HSK100A-THB10016	100	131	160

HSK-E Flange Tools

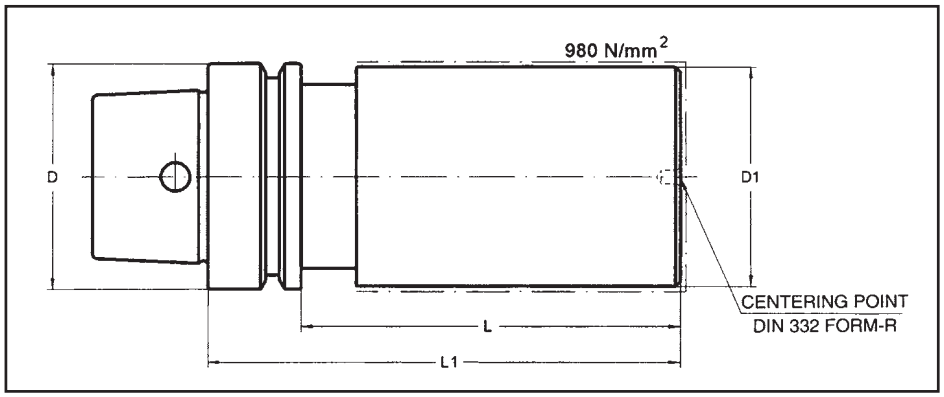

Taper	Order No.	Device Type	D_1 (mm)	L (mm)	L_1 (mm)
25	599-100E	HSK25E-THB2510	25	80	100
32	599-200E	HSK32E-THB3210	32	80	100
40	599-300E	HSK40E-THB4010	40	80	100
50	599-400E	HSK50E-THB5010	50	74	100
63	599-500E	HSK63E-THB6310	63	74	100

TECHLEADER® TOOLING INC.

BT & CT Retention Studs

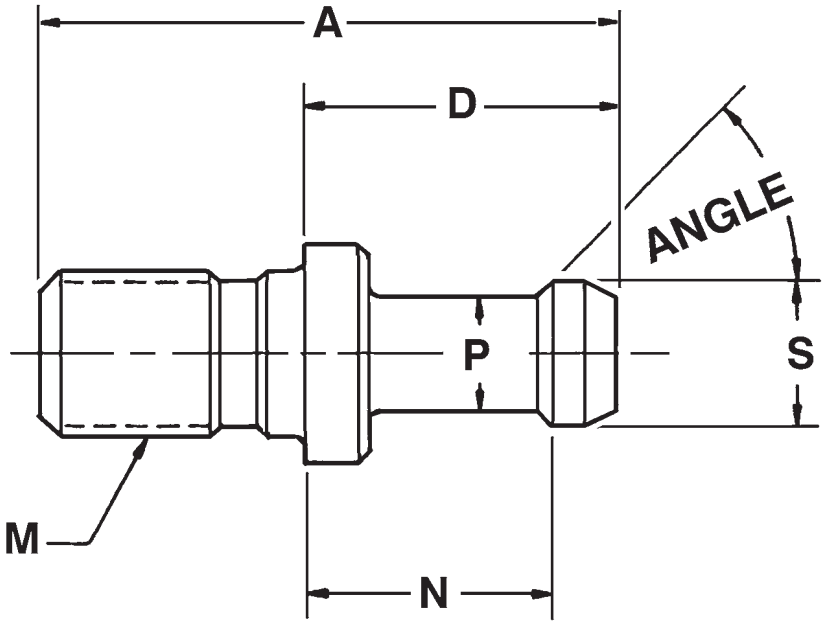

NOTE: Due to manufacturer's on-going updates, please provide us with a drawing of the required retention stud as well as machine model number, so we can insure we supply you with the correct retention stud.

Order No.	Description
499-B1560	BT15-TYPE II
499-B3045 499-B3060	BT30-TYPE I BT30-TYPE II
499-B4045 499-B4060 499-B4090	BT40-TYPE I* BT40-TYPE II* BT40-TYPE III*
499-B5045 499-B5060 499-B5090	BT50-TYPE I* BT50-TYPE II* BT50-TYPE III*
329-13	BT40-J1S6339

* Retention Studs are available with hole for coolant through option. Add 'H' to the end of order number.

Order No.	Description
499-C40US 499-C40USN 499-C40USS 499-C45US 499-C50US 499-C50USN	CT40-US STD with hole CT40-US STD no hole CT40-US STD with shoulder & hole CT45-US STD with hole CT50-US STD with hole CT50-US STD no hole
499-C4045 499-C4060 499-C4090	CT40-TYPE I* CT40-TYPE II* CT40-TYPE III*
499-C5045 499-C5060 499-C5090	CT50-TYPE I* CT50-TYPE II* CT50-TYPE III*
171-22	CT40-CINCINNATI SABRE
126-22	CT40-HURCO
499-612	CT50-MAZAK with washer fit
499-405 499-605	CT40-MISTUI SEIKI CT50-MISTUI SEIKI
499-406	CT40-OKK

TECHLEADER® TOOLING INC.

Electronic Edge Finder

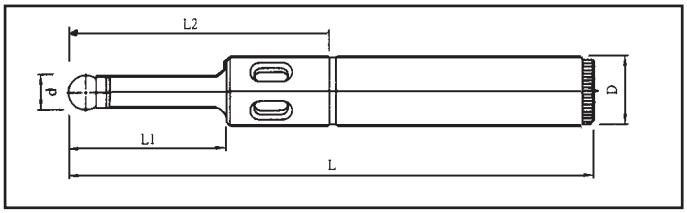

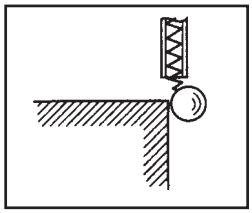

Order No.	Type	D	d	L	L_1	L_2	Version
460-045	KCF-3404	3/4”	0.400 ”	6.00”	1.80”	3.00”	INCH

Battery: 1 x 12V

Electronic Edge Finder
with beeper

Description and Operation Manual For Electronic Edge Finder

Main Features:
- Accuracy of ball: ±0.002 mm/0.00008”
- Concentricity of ball-probe and shank: 0.005 mm/0.0002”
- Spring loaded ball-probe for preventing damage of probe

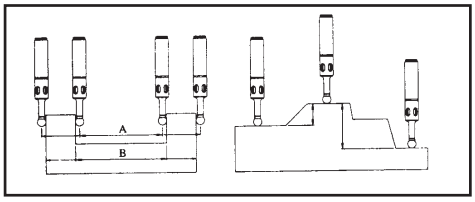

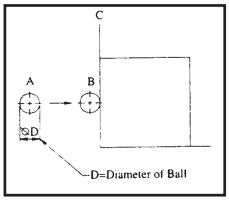

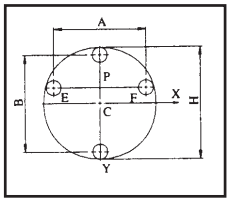

1. Remove the cap and load the batteries
2. Make contact between the shank and the ball to check that the diode-lamp lights.
3. Assemble the gauge to the machines spindle (A) with the use of a chuck.
4. Feed the machine table (manually) toward the workpiece. When the ball touches the surface (edge) where the measurement shall start the LED lights (Red).
5. The digital read out device or the machine scales shall be read off or set to zero.
6. Feed the machine table to the next measuring point. When the ball touches the workpiece the LED lights.
7. Read off the moved distance on the digital readout device/machine scales.

INSIDE/OUTSIDE MEASURING:
B = distance to measurement
A = moved distance
D = ball diameter
Inside measurement
Value: B = A + D
Outside measurement
Value: B= A- D

HEIGHT/DEPTH MEASURING:
The moved distance between the measuring points is the actual measured value.

CENTERING/MEASURING OF HOLES:
1. Move the electronic edge finder to any position inside the hole
2. Touch the hole walls (E/F). Moved distance (A) Divided by 2 gives the centerline (Y).
3. Moved distance (B) between the hole moving across the Y-axis centerline + D = hole diameter (H).
4. The hole center (C) - hole diameter (H) divided by 2.

Electronic Tool Length Setter

Basic Dimension	Vertical Position	Horizontal Position	CNC Lathe
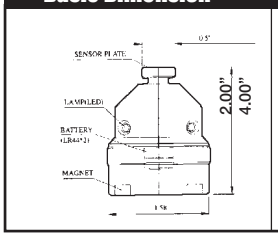	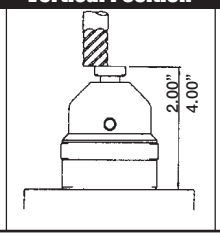	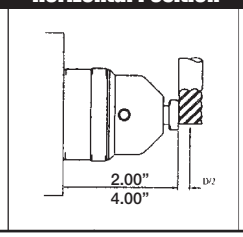	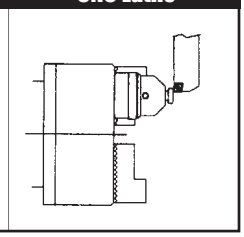

- Accuracy 2.000” Tolerance: +0/+0.005 mm/0.0002”
- Accuracy 4.000” Tolerance: +0/+0.005 mm/0.0002”
- Thanks to the power magnet inserted at the bottom of the base, this setter can be used in horizontal and vertical position.
- Can be applied on machining Center and CNC Lathe.

* **Ordering Code: 460-055** 2” Height
* **Ordering Code: 460-056** 4” Height

Electronic Tool Length Setter

TECHLEADER® TOOLING INC.

Spindle Cleaners
For HSK & ISO (CT & BT) TAPERS

The unbeatable tool to ensure efficient cleaning of HSK & Tapered Spindles

Maintain the precision and prolong the life of your high-quality tools and machine tools

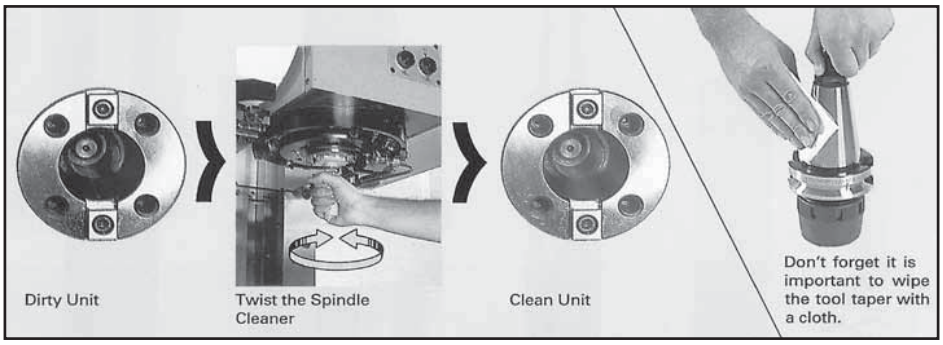

- Sturdy construction with high oil and grease resistance.
- Plastic injection molded core with fluted location strips ensures accurate sizing and cleaning efficiency.
- Due to inset location, cleaning strips will maintain adhesion to the taper core even under scrubbing action.
- Well spaced cleaning strips will remove even large particles.
- A quality controlled product

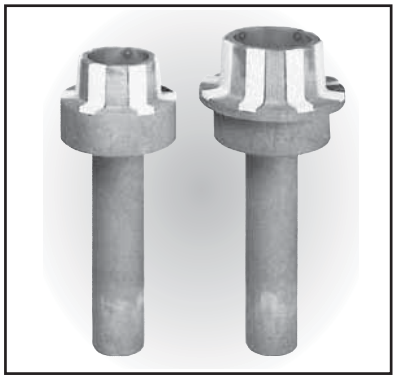

HSK Series

HSK 25	HSK 32	HSK 40	HSK 50	HSK 63	HSK 80	HSK 100
506- 970	506- 972	506- 974	506- 976	506- 978	506- 980	506- 982

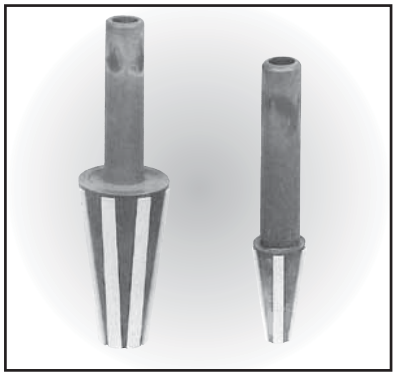

ISO Series

ISO 20	ISO 30	ISO 40	ISO 45	ISO 50	ISO 60*
506- 920	506- 930	506- 940	506- 945	506- 950	506- 960

* Wooden Core
Can be used in NMTB, BT & CT Tapers

TECHLEADER® TOOLING INC.

Tool Holder Locking Fixtures

Provides the CNC Industry a Rigid Clamping Fixture that allows quick and simple clamping and changing of tools.

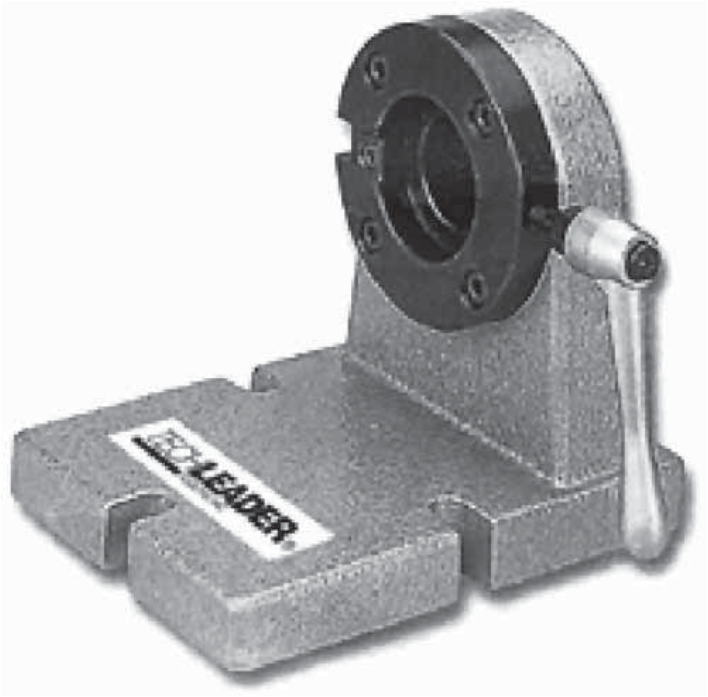

Horizontal Tool Lock

- Easy compression nut tightening.
- Access to retention knob
- No contact with holder taper, keeping it free from dirt and chips.
- Can be set up for right or left hand operators.
- Allows spindle to run while setting up or replacing tool.

Order No.	Taper
460-30TL	BT/CT 30
460-40TL	BT/CT 40
460-50TL	BT/CT 50

TECHLEADER® TOOLING INC.

Quick Change Tool Holder Locking Fixture

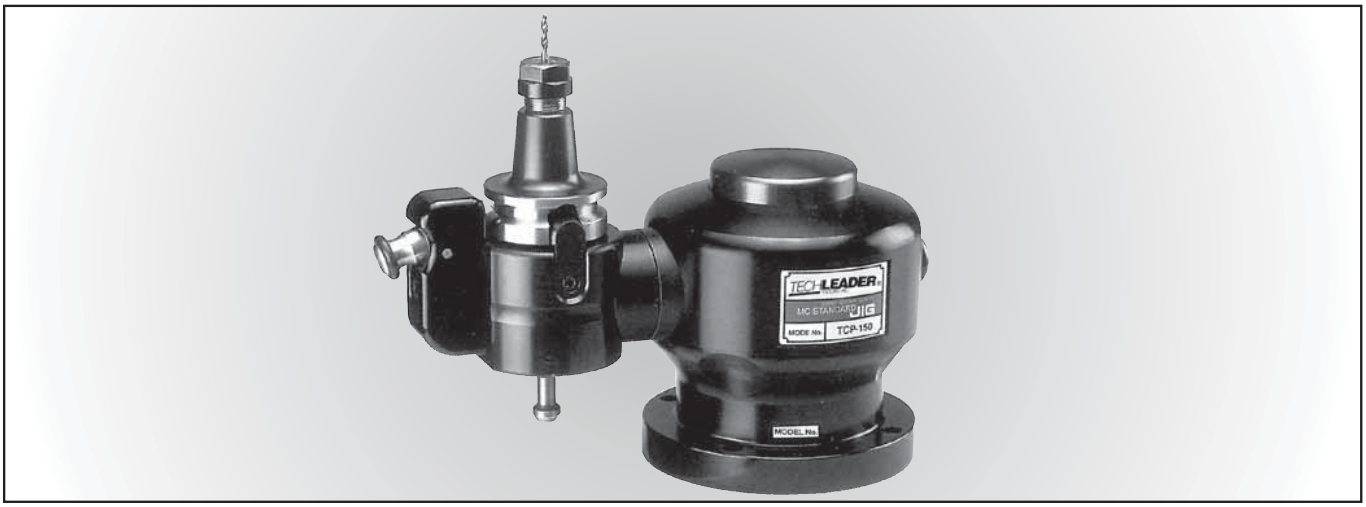

Tool Holder Socket is Changeable

Easy to assemble and disassemble tool holder socket from and main body by just pressing the red button on the right hand side of the main body.

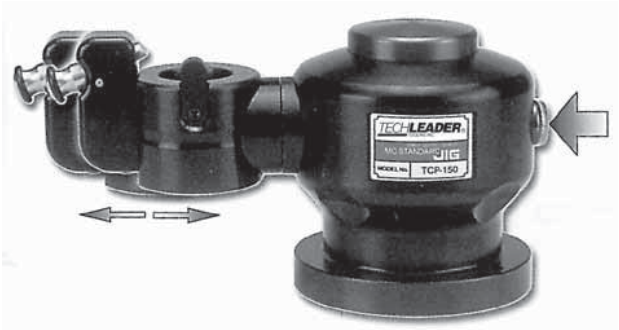

Tool Holder Socket is Adjustable up to 360º

Easy to adjust tool holder for up to 360º (45º for each adjustment) while pressing down the large red button on the top of tool holder main body.

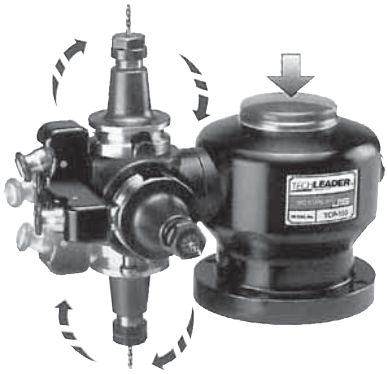

4 pcs of M10x40mm bolt will be fastened from the top of base plate of tool holder socket or 4 pcs of M12 bolt to be fastened from the bottom of the base plate of the tool holder main body.

Main Body

ORDER NO.	MODEL NO.
425-TCP150	TCP-150

Tool Holder Sockets

ORDER NO.	MODEL NO.
425-B30	BT30
425-B40	BT40
425-B50	BT50
425-C40	CT40
425-C50	CT50
425-H40	HSK40A
425-H63	HSK63A
425-H80	HSK80A
425-H100	HSK100A
425-H25E	HSK25E
425-H32E	HSK32E
425-H40E	HSK40E
425-H50E	HSK50E
425-H63F	HSK63F

TECHLEADER® TOOLING INC.

Tool Block

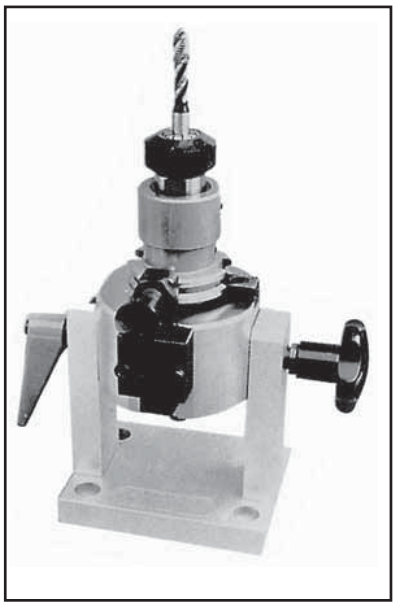

TOOL MOUNTING DEVICE TILTING BETWEEN 0 AND 90 DEGREES

Rapid, simple and robust, the TOOL-BLOCK has been developed from experience for the assembly and disassembly of cutting tools into tool holders. Tool holders are expensive and damage to shanks and flanges can effect machine spindles.

The TOOL-BLOCK allows tools to be inclined from 0 degrees to 90 degrees facilitating access to both ends of the toolholder in one operation. Toolholders are secured in position in the sleeve by a spring plunger or clamp for complete security. Indispensable by the machine and in tool presetting areas, the cost of TOOL-BLOCK will soon be recovered.

ISO

ISO tool pots interchangeable from ISO25 to IS050. Machined to a high standard with a safety spring plunger adjustable in length and diameter for all types of flanges, conventional or C.N.C.

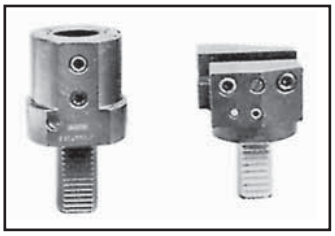

VDI 3425/2

Tool pots interchangeable for VDI3425/2 from diameter 20mm to 50mm. A replication of tool turret serrations clamps the toolholder in position.

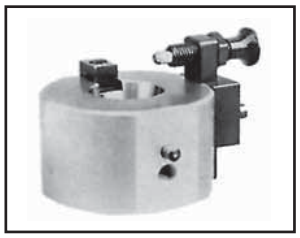

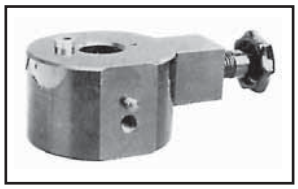

Made in Switzerland.

ISO	ORDER NO.
50	460-TB50
45	460-TB45
40	460-TB40
35	460-TB35
30	460-TB30
25	460-TB25
20	460-TB20
10	460-TB10

oVDI	ORDER NO.
50	460-TB50V
40	460-TB40V
30	460-TB30V
20	460-TB20V

ON REQUEST:
HSK available

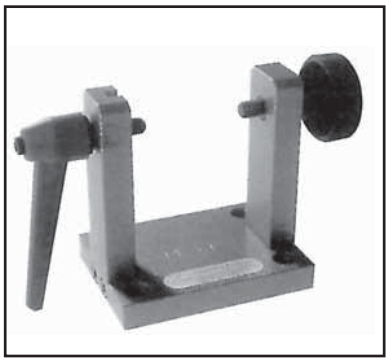

Mounting frame stove enameled steel of a very rigid construction, four holes for cap screws M10. Includes hand lever and hardened rotational pin.

ORDER NO.
460-TBS100

Tool Block 1D Presetters

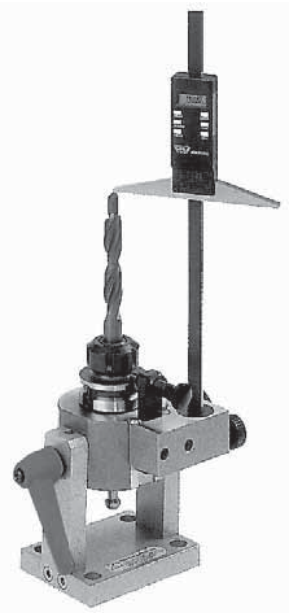

Digital measurement of the tool length

1 AXIS MEASUREMENT

DESCRIPTION

The standard TOOL-BLOCK can be fitted with a 'TBM' accessory for use with a PAV digital readout, converting the TOOL-BLOCK into a simple one axis presetter used beside the machine or in a preset area. After measuring, the length can be introduced into the tool correction memory of the CNC, without having to measure it on the machine. It is also possible to adjust, after a tool breakage the new tool to the same length avoiding this way changements of tool corrections on the CNC. Built into the digital readout is an RS232C interface for printing labels or keeping records. Please ask us for further information.

USE

The TBM attachment can be retrofitted to existing TOOL-BLOCK and the digital readout simply removed when not in use. The digital readout is clamped into a sleeve within the TBM, which can swivel to allow measurement for varying diameters of tools. The reset button on the digital display allows a simple reference zero off the top of tool pot.

Interchangeable support TBM

Type	Order No.
From ISO 25 to 50 VDI 3425 / 2	460-TBM-N 460-TBMVDI

PAV digital depth gauge

Type	Order No.
Length 200 mm Length 400 mm	460-TBP200 460-TBP400

1/100mm Dial Indicator for the accurate length axis measurement includes fine adjustment.

Type	Order No.
OCL-1D	

460-OCL1D

Made in Switzerland.

DIAL INDICATOR SUPPORT ADAPTABLE ON ALL TBM, COMPLETE WITHOUT INDICATOR

Order No: 460-DO-TK

TECHLEADER® TOOLING INC.

Tool Block 2D Presetters

A low cost easy-to-handle tool presetter

2 AXIS MEASUREMENT

SPECIFICATIONS:

Diameter:
250 mm std / 370 mm optional

Length max:
350 mm

Dimensions:
630 x 400 x 160 mm

Weight: 38 kg.

Specifications are subject to change without notice.

SUMMARY

Why invest money in a high precision, very high cost device when this is not essential for manufacturing. Knowing perfectly these problems, and on the request of many TOOL-BLOCK customers, we decided to market this simple low cost tool presetter.

DESCRIPTION

Derived from the patented tool dismounting device TOOL-BLOCK. It allows quick, easy diameter and length setting of boring bars, milling cutters, drills, etc., as well as lathe tooling. Most of the tools used on machining centers (approx. 90%) don't require a setting accuracy of more than 0.05 mm. Yet they require setting off the machine for profitability and programming needs. With a repeating precision of ± 0.01 mm the TOOL-BLOCK 2D has been developed for this market. For the occasional high accuracy tools a comparator with fine adjustment is mounted as standard to the digital readout on the diameter axis. A hardened and grinded base sleeve accepts interchangeable sleeves of a very high accuracy. Utilizing the same PAV digital readout as the 1D the RS 232C interface allows connection to a label printer or micro computer.

Order No: 460-TB-2DN

Made in Switzerland.

Reception sleeves

Type	Order No.
ISO 50	460-TB-2D-50
ISO 45	460-TB-2D-45
ISO 40	460-TB-2D-40
ISO 30	460-TB-2D-30
VDI 20	460-TB-2D-20-VDI
VDI 30	460-TB-2D-30-VDI
VDI 40	460-TB-2D-40-VDI
VDI 50	460-TB-2D-50-VDI
Others	460-On request ISO20/HSK/WDX

Brevets: CH-No. 644782 **D** – No. G8416670.3 **F –** No. 84.08362 **USA –** Pat. pend **GB –** Pat. No. 2.142.562

TECHLEADER® TOOLING INC.

Visodata/Visotrim II

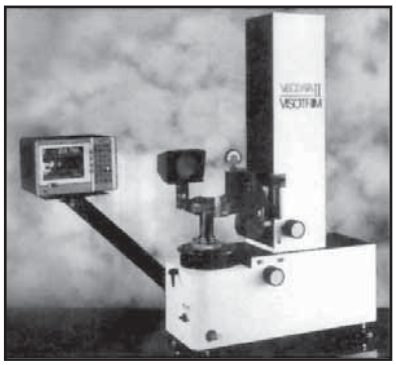

Presetting and measuring instrument

- **Precise**
- **Simple to use**
- **Guided operations by screen**
- **Expandable**
- **For any kind of tool**
- **Special probe for diameter and length measurement**

CLOSE OUT SPECIAL
CALL FOR SPECIAL NET PRICE.

ONE UNIT LEFT!

MAIN SPECIFICATIONS

- Max tool diameter: 520 mm 20.47 in
- Max tool length: 600 mm 23.62 in
- Rotating cone holder on high precision bearings for ISO 50 cone with reference lock
- Manual lock of cone holder rotation (on request)
- Cone reductions for ISO 30-35-40-45 and VDI
- Digital Read-out system: VISODATA VIDEO with graphic CRT screen
- Dial indicator: both for diameter and length, ris. 0.001 mm
- Precision probe: built in hard and wear-resistant metal with 3 contact points
- Body: fusion in stabilized aluminum alloy
- Preloaded guides with rollers
- Fast movements: simultaneous of the two axis through a single control knob with
  locking and releasing button
- Fine adjustment without range limitations, on all the axis' length
- Carriages locking: pneumatic
- Tool clamping: with mechanical holdup by special adapters for any kind of collet
- Tool un-clamping: pneumatic
- Profile's optical projector (optional)
  - Standard: Screen dimensions: 100 mm Enlargement: 15x
  - Different features on request
  - Lighting: 12V lamp
- Power supply: 110 Vac 60 Hz
- Overall dimensions 650 x 1200 h=1170
- Weight: 150 Kg (approx.)

OPTIONS

VT-BRA = support for profile's projector
VT-SPOT = profile's projector standard (100-15x)

VISTORIM-2

VISTORIM-2 is a tool presetting and measuring instrument from the latest generation of VISODATA products. VISODATA has become synonymous in Italy and abroad for QUALITY PRODUCTS, PROFESSIONAL INSTALLATION and CUSTOMER SERVICE.

VISOTRIM-2 measures, presets & checks your tools in a very simple & precise way. Connected to a computer with our VT-TOOL programme, you'll be able to manage the stock movement of the tools & their component parts. The original mechanical & electronic solutions make VISOTRIM-2 an excl., advanced product. Ex. the sensor probe, which is made of shock-resistant & hard wearing metal, has three excl. contact points which allows you to measure complex tools such as disk-type milling cutters, easily & quickly.

The axis' movement is fast and smooth and is controlled by a single knob which allows you to stop and free both the axis by a single pneumatic command.

Fine adjustments and very precise movement are made through frontal rotating knobs which have no stroke limits!

The rotating cone holder is mounted on high precision bearings. The most commonly used standard ISO cones or VDI shanks are supported by special reduction sleeves. The pneumatic collet accepts any kind of shank by special adapters and reproduces the same tool clamping conditions of the machine tool. Consequently you can also clamp the most modern tools which have internal cooling systems.

VISOTRIM-2 communicates with you through its DIGITAL ELECTRONIC READ-OUT SYSTEM, a special version of the VISODATA VIDEO model. All operations are guided and the screen will show you clearly the measurements you made. Also, with a small external printer, you can print labels and reports of the measured and stored tools, sorted by machine tool.

The Analogic Optical Scale with the A.C.M.E. effect, the straightness tables, the functions graphic representation, etc. are all features which you can only fully appreciate by using them directly.

The optional projector can show you the enlarged profile of the cutting side on a graduated screen with a mobile goniometric index. In this way, in addition to diameters and lengths, you will be able to measure angles, beveled parts and radius and to verify the geometric profile of the cutting side.

TECHLEADER® TOOLING INC.

BIG BEAR ENTERPRISES

Tool Holders/Collet Racks

Tool Holder Racks
use with Trolley-Kart™

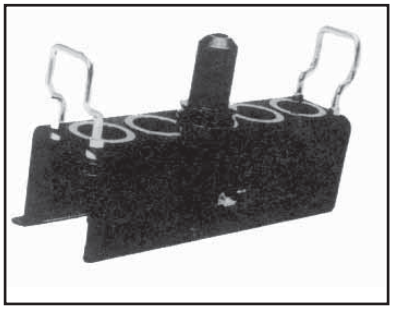

Our heavy gauge steel tool holder racks come complete with plastic inserts to prevent damage to the taper of tooling. In addition, we offer optional handles for easy portability and removal from our Trolley – Kart, plus an optional anti-tip feature to protect extended tools during transport.

Order No.	Description
105-9-0	NC Tool Holder Rack for use with 40 CAT-V or BT Tooling
105-9-1	Anti-Tip Shelf for use with 40 CAT-V or BT Tool Holder Rack
105-9-2	2 Handles for use with 40 CAT-V or BT Tool Holder Rack
105-10-0	NC Tool Holder Rack for use with 50 CAT-V or BT Tooling
105-10-1	Anti-Tip Shelf for use with 45/50 CAT-V or BT Tool Holder Rack
105-10-2	2 Handles for use with 45/50 CAT-V or BT Tool Holder Rack
105-10-45	NC Tool Holder Rack for use with 45 CAT-V or BT Tooling
105-11-0	NC Tool Holder Rack for use with 30 & 35 CAT-V or BT Tooling
105-11-2	Anti-Tip Shelf for use with 30 & 35 CAT-V or BT Tool Holder Rack
105-11-3	2 Handles for use with 30 & 35 CAT-V or BT Tool Holder Rack

Trolley-Kart™

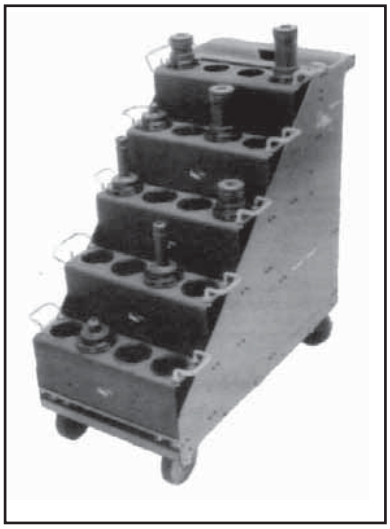

This is our premier tool cart with more features than anything else on the market. It is American made with uncompromising quality from the heavy gauge steel panels to the 5” swivel casters and the self-locking aircraft nuts. The versatility of our TROLLEY-KART™ allows you to customize with optional Tool Holder Racks and Collet Racks to various shank sizes plus there is ample collet and parts storage in the back of the cart. In one simple cart you have a complete system to keep you organized and your tools stored properly.

Shown with tool holder racks with handles configured for your needs. Shipped KD-UPS

Order No.	Description
105-15-0	NC Trolley-Kart™ Made of heavy-gauge steel, comes standard with: 1 base, 2 side panels, 2-5” swivel casters, 2-5” rigid casters, assembly hardware, cross brackets to hold Tool Holder Racks, 6 plastic bins.

Kounter-Kaddy™

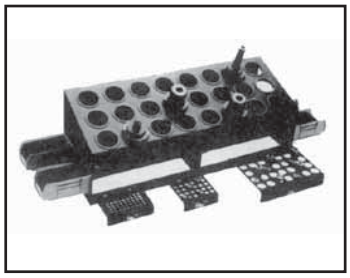

The Kounter-Kaddy is a compact and practical storage system that fits easily on your counter, workbench or tool cart and keeps a convenient number of tools readily available. Plastic inserts give your tools added protection while being stored and plastic side bins keep small parts organized and at your fingertips.

Part No.	Description
105-17-1	30 CAT-V/BT 35 BT
105-17-2	40 CAT-V/BT
105-17-3-45	45 CAT-V/BT
105-17-3	50 CAT-V/BT

Big Bear Collet Racks sold separately. CNC Tools shown not included

New – Econo-Cabinet™

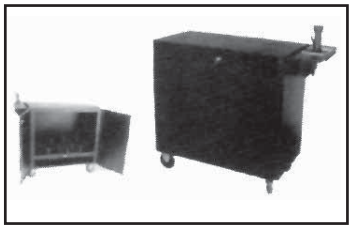

A standard Econo-Kart with enhanced features including lockable front doors, side and back panels, and top shelf with a protective rubber adhesive mat that provides additional workspace.

Part No.	Description
105-3021	NEW – Econo-Kabinet™ with center cat 30 shelf, KD
105-3022	NEW – Econo-Kabinet™ with center cat 40 shelf, KD
105-3023	NEW – Econo-Kabinet™ with center cat 50 shelf, KD

TECHLEADER® TOOLING INC.

BIG BEAR ENTERPRISES

Tool Holders/Collet Racks

Econo Kart™

Shown with optional 2nd shelf and tool tightening fixture. Shipped KD - UPS

Shown with new optional drawer and tool tightening fixture. Shipped KD-UPS

The Big Bear Econo-Kart is a simple, convenient & economical way to organize your tools & work area. This cart features heavy gauge steel construction & its top shelf can hold up to 50 tools. There is plenty of storage room on the base rack & an optional second tool shelf may be added to give Econo-Kart a 100 tool capacity. Other Econo-Kart options include a bin rack & tool tightening fixture & optional drawer.

Order No.	Description
105-3001	Econo-Kart™ CAT 40V/BT (50 holes)
105-3007	Econo-Kart™ CAT 50V/BT tooling (32 holes)
105-3002	Optional 2nd shelf for CAT 40V/BT Tooling (50 holes)
105-3008	Optional 2nd shelf for CAT 50V/BT Tooling (32 holes)
105-3003	Optional Tool-Tightening Fixture for CAT 40V/BT Tooling
105-3009	Optional Tool-Tightening Fixture for CAT 50V/BT Tooling
105-3010	Econo-Kart™ (2) Organizer Racks plus (14) plastic Bins
105-3011	Flat Shelf
105-3012	Optional Drawer Made of heavy gauge steel comes standard with one rubber mat, one brass plated handle, hardware, slider and side bracket. Assembly required. 110 lbs.

Collet Racks

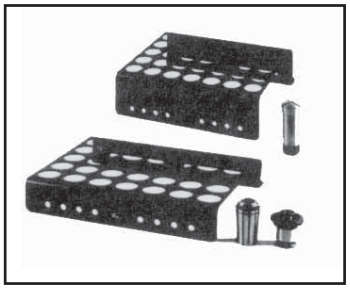

Our racks are quality made of heavy gauge steel and can be mounted in our Trolley-Kart or utilized on a bench top for convenient accessibility. Collet protection, size identification and storage are all handled easily with a Big Bear Collet Rack System.

Part No.	Description
105-1	100 Series Double Angle Collets (holds 36 pc.)
105-2	200 Series Double Angle Collets (holds 27 pc.) 300 Series Double Angle Collets (holds 18 pc.) 160 Series Micro Precision (holds 9 pc.)
105-3	150 Series Tapered & Ground Collets (holds 25 pc.) #3 Quick Change Collet Tap Head (holds 25 pc.) 16-Collets & 3-J Collets (holds 25 pc.)
105-4	100 Series Tapered & Ground Collets (holds 35 pc.) #2 Quick Change Collet Tap Head (holds 35 pc.)
105-4-1	Multi-Purpose Rack: Series 11 Metric Collets ECX/ER/DR/RD (holds 16pc.) Series 16 Metric Collets ECX/ER/DR/RD (holds 16pc.) Series 20 Metric Collets ECX/ER/DR/RD (holds 15pc.) Series 32 Metric Collets ECX/ER/DR/RD (holds 21pc.)
105-5	075 Series Tapered & Ground Collets (holds 45 pc.) 180 Series Double Angle Collets (holds 45 pc.) #1 Quick Change Collet Tap Head (holds 45 pc.)
105-2011	11 Series Metric Collets ECX/ER/DR/RD (holds 36 pc.)
105-2016	16 Series Metric Collets ECX/ER/DR/RD (holds 36 pc.)
105-2020	20 Series Metric Collets ECX/ER/DR/RD (holds 36 pc.) C-4 Sandvik Collets (holds 36 pc.)
105-2025	25 Series Metric Collets ECX/ER/DR/RD (holds 30 pc.)
105-2032	32 Series Metric Collets ECX/ER/DR/RD (holds 30 pc.)
105-2040	40 Series Metric Collets ECX/ER/DR/RD (holds 24 pc.) C-8 Sandvik Collets (holds 24 pc.)
105-12	R8 Collets (holds 32 pc.)
105-13	5-C Collets (holds 35 pc.)

NC Tool Shelves

Create your Own WORK STATION with Big Bear!

A combination of Big Bear Tool Shelves. Encloser Kabinet and accessories can create a custom work space to increase efficiency and quality.

Big Bear's NC Tool Shelf Storage system can solve all your shop's tool storage requirements economically & with quality shelving that is virtually indestructible. Each NC Tool Shelf Storage System can function as a stand alone unit, or a series may be bolted together to form an entire tool crib. Sturdy construction heavy ten gauge formed steel legs include floor-bolt down tabs. Shelves have steel cross bracing.
Shelving is 7" high x 36" wide x 8" deep. Plastic inserts in shelves protect tooling.

DIMENSIONS: Corner Legs: 7' high Shelves: 36" wide, 18" deep – Shown with NEW optional drawer

Part No.	Description	Part No.	Description
105-16-0	NC Tool Shelf Storage system Legs (only)	105-16-6	NEW- Optional Cabinet Encloser. Comes with standard flat top with protective rubber adhesive mat base. Side, back, and front door panels with lock and key.
105-16-1	Shelf for use with 30 & 35 CAT-V or BT Tooling		
105-16-2	Shelf for use with 40 CAT-V or BT Tooling		
105-16-345	Shelf for use with 45 CAT-V or BT Tooling		
105-16-3	Shelf for use with 50 CAT-V or BT Tooling		
105-16-4	Plain Shelf	105-16-7	Organizer Racks- 2 pieces; include assembly hardware and 14 plastic bins
105-16-5	Optional Drawer Made of heavy gauge steel comes standard with one rubber mat, one brass plated handle, hardware, slider and side bracket. Assembly required. 110 lbs.		

Storage Cabinets & Trollies

Ministore is the ideal storage system for tool rooms, machining centers, inspection area, workstation and tool crib.

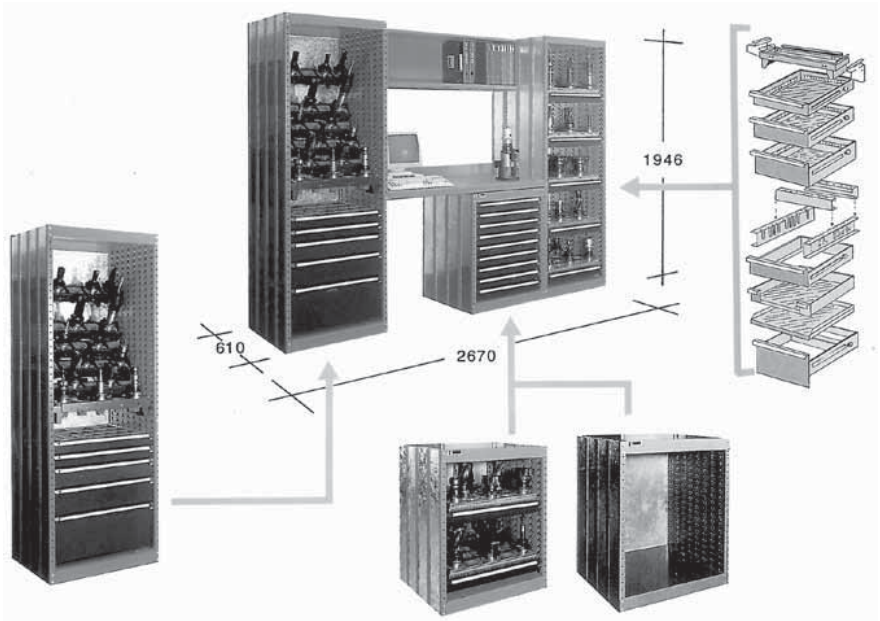

Whether you need to store 100 or 1,000 tools, the Ministore can be adapted to solve your storage problems, to reduce space and increase productivity.

The SUSTA Ministore comprises of 2 SMS 4 Combiracks which are equipped with selected drawers and cradles. A robust work top and overhead document shelf connects the two Combiracks and a half size SMS 675 is placed underneath the worktop in either left or right-hand position.

The Ministore can be expanded as your storage needs grow by simply adding additional shelving modules to both ends.

The 1-3/4” laminated maple work table is available in 24” x 53” and 24” x 79” sizes. It is treated and sealed for long term service in industrial applications. The work table is the ideal location for in-shop computer terminals, gauging devices and presetting fixtures. Plastic-covered and steel work tables are available on request.

The SUSTA Ministore is a system that grows with your needs. Its standard modular drawers and internal components can be installed or moved without the need of any tools and additional Combiracks can be added as needed. The system is completely expandable and interchangeable.

Security
Combiracks can be supplied with lockable doors that open either left or right handed for user convenience and component security.

Document Shelf
Each Ministore is assembled with an upper document shelf which can be divided to accommodate books, files, etc.

Storage Cabinets & Trollies

Ministore is the system that grows with your needs. Standard modular drawers can be added without need of nuts or bolts and additional Combiracks added as needed providing complete inter-changeability

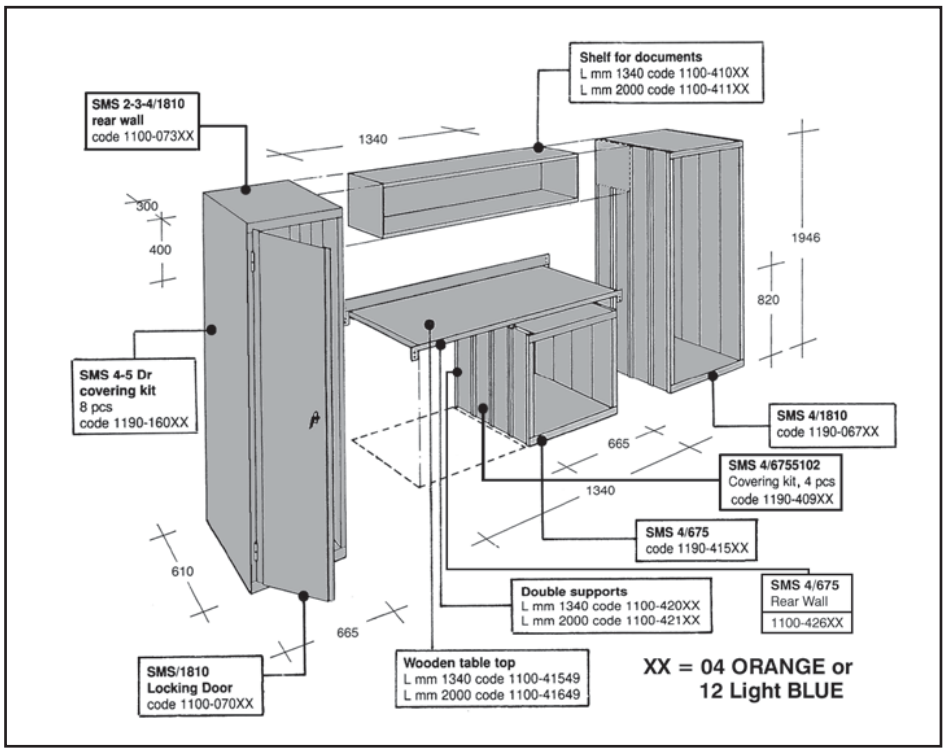

SMS/4 Drawers

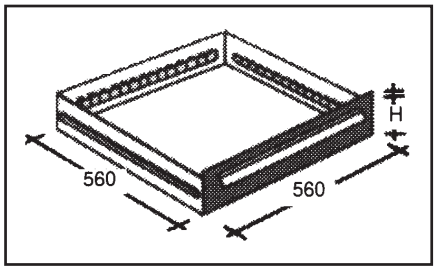

Model	H front	h useful	Capacity kg.	Code
75 T	75	65	125	1100-27001
110 T	110	100	125	1100-27101
150 T	150	140	125	1100-27201
210/150 T	210	200	125	1100-27401
225/150 T	225	215	125	1100-27301
KIT Frame	75	65	125	1100-31401

NB: Every drawer is equipped with locking device.

Sockets

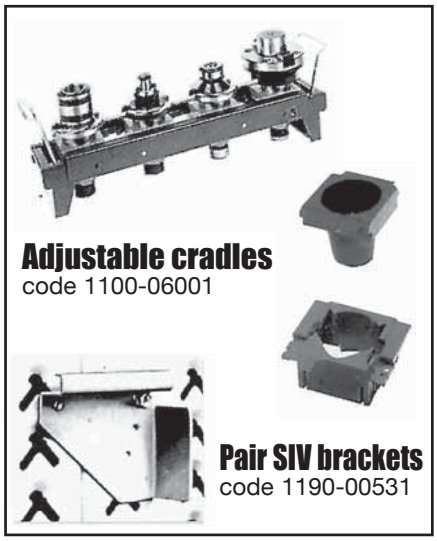

Model	Qty x unit	Code
ISO 30	9	1100-05918
ISO 35	9	1100-06718
ISO 40	8	1100-05118
ISO 45	6	1100-05218
ISO 50	5	1100-05318
ISO Multisize		1100-05518
HSK 40A	11	1100-22118
HSK 50A	6	1100-22318
HSK 63A	6	1100-22418
HSK 80A	6	1100-22518
HSK 100A	5	1100-22618
VDI 30	7	1100-06318
VDI 40	6	1100-06418
VDI 50	5	1100-06518
VDI 60	4	1100-06618

Sockets Available

HSK-A
Kennametal KM
Komet ABS
Sandvik Capto
Toolholders

TECHLEADER® TOOLING INC.

SUSTA®

Storage Cabinets & Trollies

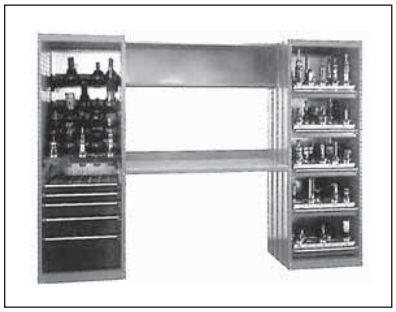

Ministores

Standard Ministores can be chosen as shown. Letters indicate internal configuration as shown on opposite page. The last two numbers indicate taper of holders.

The Ministore price is inclusive of all internal parts as shown. Each module's price includes all internal components as shown. They can either be specified as an integral part of a new Ministore or added later, as your storage needs grow. Standard colors in special epoxy polymerized paint are:
• Combiracks - Lobster Red
• Drawers - Slate Gray • Back/side panels, int. frames - Zinc Plated Steel.
A compact tool wash machine designed to fit under the tabletop is a perfect compliment to the work station. It is completely self contained and is recommended for the proper protection of stored tooling.
Contact your SUSTA Sales Engineer for additional information.
Many years of experience in storage has enabled SUSTA to develop the ultimate storage system for tool rooms, metrology labs, turning and machining centers, inspection and workstations.

Assembly - All Ministores and Combiracks are easily assembled and are delivered in kit form with easy-to-follow instructions. Drawers may be added or repositioned in seconds without nuts and bolts.

MS20AA40 MS20BC40 MS20BG40 MS20EG40
MS20AA45 MS20BC45 MS20BG45 MS20EG45
MS20AA50 MS20BC50 MS20BG50 MS20EG50

ministore 20
Empty shelving
code 1190-18504

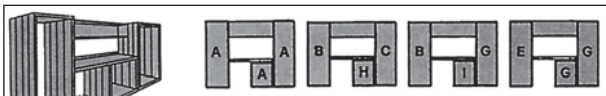

MS21AAA40 MS21BCH40 MS21BGI40 MS21EGG40
MS21AAA45 MS21BCH45 MS21BGI45 MS21EGG45
MS21AAA50 MS21BCH50 MS21BGI50 MS21EGG50

ministore 21
Empty shelving
code 1190-18604

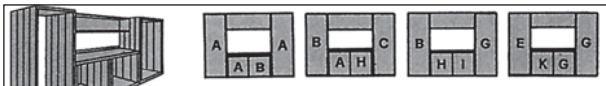

MS22AAAB40 MS22BCAH40 MS22BGHI40 MS22EGKG40
MS22AAAB45 MS22BCAH45 MS22BGHI45 MS22EGKG45
MS22AAAB50 MS22BCAH50 MS22BGHI50 MS22EGKG50

ministore 22
Empty shelving
code 1190-18704

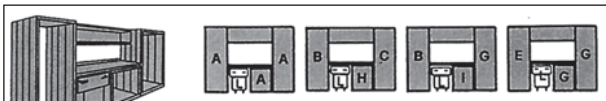

MS21LAAA40 MS21LBCH40 MS21LBGI40 MS21LEGG40
MS21LAAA45 MS21LBCH45 MS21LBGI45 MS21LEGG45
MS21LAAA50 MS21LBCH50 MS21LBGI50 MS21LEGG50

ministore 21L
Empty shelving
code 1190-18804

MS30AA40 MS30BC40 MS30BG40 MS30EG40
MS30AA45 MS30BC45 MS30BG45 MS30EG45
MS30AA50 MS30BC50 MS30BG50 MS30EG50

ministore 30
Empty shelving
code 1190-18904

MS31AAA40 MS31BCH40 MS31BGI40 MS31EGG40
MS31AAA45 MS31BCH45 MS31BGI45 MS31EGG45
MS31AAA50 MS31BCH50 MS31BGI50 MS31EGG50

ministore 31
Empty shelving
code 1190-19004

MS32AAAB40 MS32BCAH40 MS32BGHI40 MS32EGKG40
MS32AAAB45 MS32BCAH45 MS32BGHI45 MS32EGKG45
MS32AAAB50 MS32BCAH50 MS32BGHI50 MS32EGKG50

ministore 32
Empty shelving
code 1190-19104

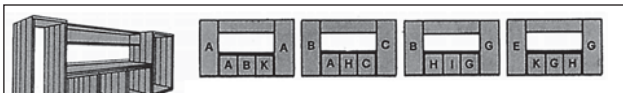

MS33AAABK40 MS33BCAHC40 MS33BGHIG40 MS33EGKGH40
MS33AAABK45 MS33BCAHC45 MS33BGHIG45 MS33EGKGH45
MS33AAABK50 MS33BCAHC50 MS33BGHIG50 MS33EGKGH50

ministore 33
Empty shelving
code 1190-19204

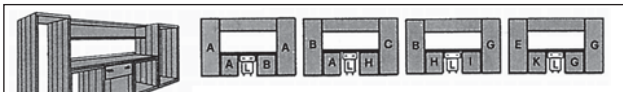

MS32LAAAB40 MS32LBCAH40 MS32LBGHI40 MS32LEGKG40
MS32LAAAB45 MS32LBCAH45 MS32LBGHI45 MS32LEGKG45
MS32LAAAB50 MS32LBCAH50 MS32LBGHI50 MS32LEGKG50

ministore 32L
Empty shelving
code 1190-19304

Storage Cabinets & Trollies

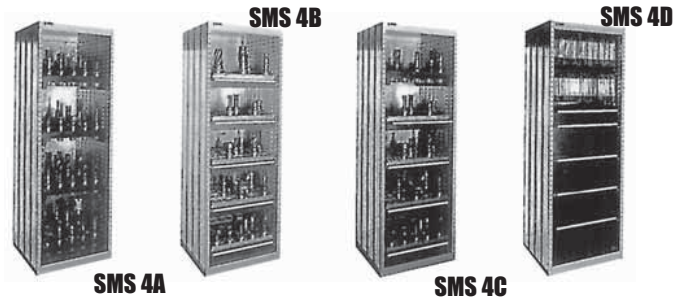

SMS 4A
ISO40 64 1190-16104
ISO45 48 1190-16204
ISO50 40 1190-16304

SMS 4B
ISO40 2001190-16404
ISO45 150 1190-16504
ISO50 125 1190-16604
TR28 275 1190-16704
TR36 175 1190-16804

SMS 4C
ISO40 184 1190-16904
ISO45 138 1190-17004
ISO50 115 1190-17104

SMS 4D
CODE 1190-17204

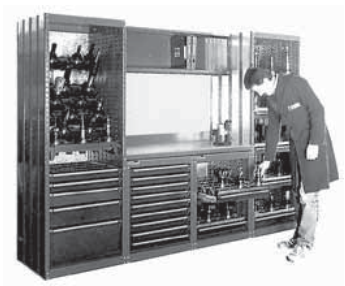

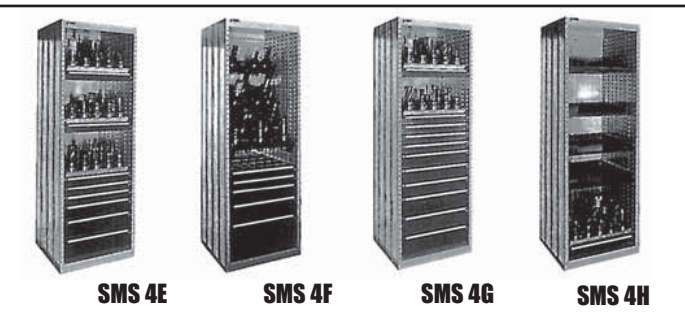

SMS 4E
ISO40 120 1190-17304
ISO45 90 1190-17404
ISO50 75 1190-17504

SMS 4F
ISO40 48 1190-17604
ISO45 36 1190-17704
ISO50 30 1190-17804

SMS 4G
ISO40 80 1190-17904
ISO45 60 1190-18004
ISO50 50 1190-18104

SMS 4H
ISO40 40 1190-18204
ISO45 30 1190-18304
ISO50 25 1190-18404

Ministore

The Ministore system combines the advantages of maximized storage density with a user-oriented work-station in an area as little as 17 square feet of floor space.

Ministores can be custom-tailored to provide the best solution to your storage needs by using the components shown on pages 1-68 and 1-76. Each fully-telescoping frame and drawer has a full length handle with identification label for properly organizing its' contents. In drawers with the 'Kit 5' socket frame, each row is designated to accept the max. number of tools per shelf.

Drawers are provided with internal dividing slots that accept the numerous standard configurations shown on page 6. Drawer dividers must be ordered separately. The number after ISOxx represents the number of sockets supplied.

SMS 4/675 A
CODE 1190-41704

SMS 4/675 B
CODE 1190-41804

SMS 4/675 C
CODE 1190-41904

SMS 4/675 D
CODE 1190-42004

SMS 4/675 E
CODE 1190-42104

SMS 4/675 F
CODE 1190-42204

SMS 4/675 G
CODE 1190-42304

SMS 4/675 H
CODE 1190-42404

SMS 4/675 I
ISO40 120 1190-42504
ISO45 90 1190-42604
ISO50 75 1190-42704
TR28 165 1190-42804

SMS 4/675 K
ISO40 80 1190-42904
ISO45 60 1190-43004
ISO50 50 1190-43104
TR28 110 1190-43204

TECHLEADER® TOOLING INC.

SUSTA®

Storage Cabinets & Trollies

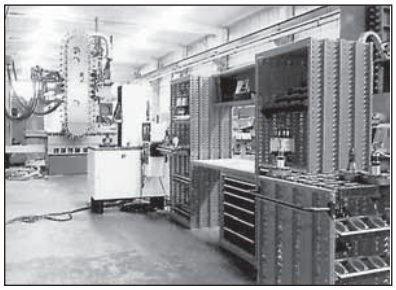

Ministore

Ministore provides efficient storage allowing quick selection to tools. The label holder, incorporated into the handle, provides identification of internally stored tools

Control

Tool management within the Ministore creates additional time for other work. The Ministore permits better control of tools and each drawer has 100% extension of opening which allows the operator to have a complete view of all stored components. This eliminates tool loss, understocking, and duplication.

Productivity

Due to the fact that the Ministore can be located next to the machine, the retrieval time is reduced which increases productivity.

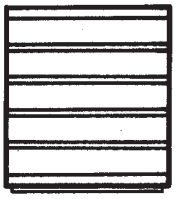

Empty Socket Frame
H.75 - 1190-20834

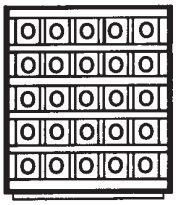

Socket frame kit w/sockets
40 ISO 40 - 9911-32134
30 ISO 45 - 9911-32234
25 ISO 50 - 9911-32334

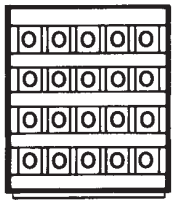

Socket frame kit w/sockets
24 ISO 40 - 9911-32434
20 ISO 45 - 9911-32534
16 ISO 50 - 9911-32634

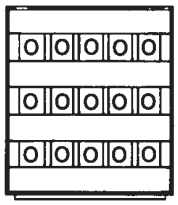

Socket frame kit w/sockets
15 ISO 40 - 9911-32734
12 ISO 45 - 9911-32834
9 ISO 50 - 9911-32934

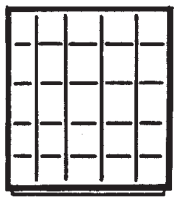

25 compartments
drw h. 75 - 9911-27719
drw h. 110 - 9911-27819
drw h. 150 - 9911-27919

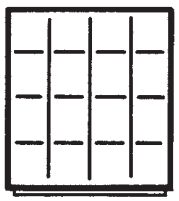

16 compartments
drw h. 75 - 9911-28119
drw h. 110 - 9911-28219
drw h. 150 - 9911-28319

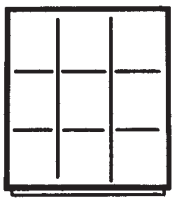

9 compartments
drw h. 75 - 9911-28819
drw h. 110 - 9911-28919
drw h. 150 - 9911-29019

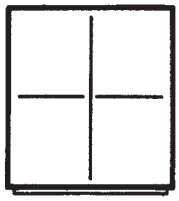

4 compartments
drw h. 75 - 9911-29619
drw h. 110 - 9911-29719
drw h. 150 - 9911-29819

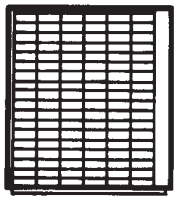

108 tape boxes
drw h. 110 - 9911-30519

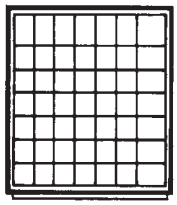

49 plastic boxes
drw h. 75 - 9911-26318

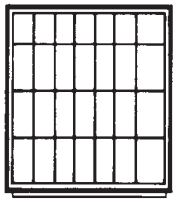

28 plastic boxes
drw h. 75 - 9911-26418

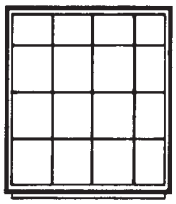

16 plastic boxes
drw h. 75 - 9911-26518

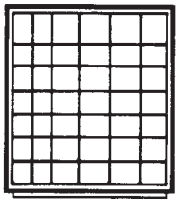

42 plastic boxes
drw h. 75 - 9911-26618

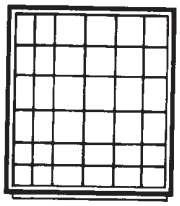

36 plastic boxes
drw h. 75 - 9911-26818

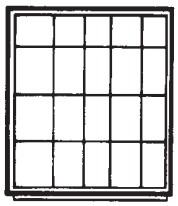

20 plastic boxes
drw h. 75 - 9911-26918

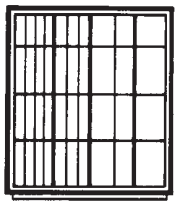

10 plastic boxes
drw h. 75 - 9911-31018

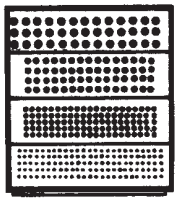

Collets drw h. 75/110
TG 100 - 9911-09829
TG 150 - 9911-09229
DA 0010 - 9911-09129
DA 0020 - 9911-09029

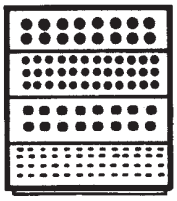

Collets & Bilz drw h. 75/110
DA 0030 - 9911-08929
DA 0018 - 9911-08829
BZ 1 - 9911-07829
BZ 2 - 9911-07929

Drawers can be divided internally with standard dividers in various combinations. All components are standard stock items and identified as a complete set for easier selection. Complete sets are shown, each with its' own code number.

Storage Cabinets & Trollies

Ministore

The Ministore modules can be utilized as individual work benches which can be selected either from standard configurations, as shown, or customized to suit customer needs. By incorporating the Ministore with standard SMS Tool Carts, almost all possible storage problems can be solved

The Ministore provides the ideal 'start-up' storage system which can be expanded as needs increase, making it the most flexible, dense and efficient storage system available

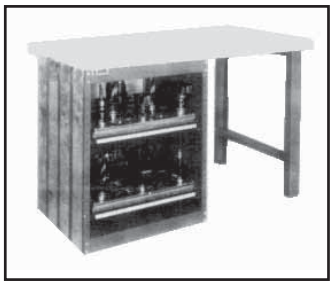

Assembly station STM1

Emply Shelving code 1190-19504 — Dim. 1500 x 600 x 875

A	B	C	F
STM1A09CASS	STM1B05CASS	STM1C06CASS	STM1F05CASS
G	H	K	I
STM1G07CASS	STM1H06CASS	STM1KISO40 STM1KISO45 STM1KISO50	STM1IISO40 STM1IISO45 STM1IISO50

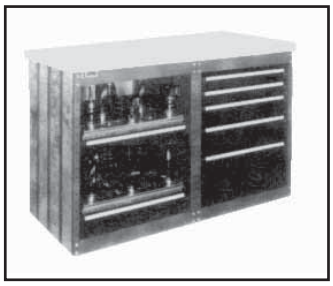

Assembly station STM2

Emply Shelving code 1190-19604 — Dim. 1500 x 600 x 875

A B	A C	F G	G H
STM2AB09CAS	STM2AC15CAS	STM2FG12CAS	STM2GH11CAS
A I	G I	G K	H I
STM2AIIS040 STM2AIIS045 STM2AIIS050	STM2GIIS040 STM2GIIS045 STM2GIIS050	STM2GKIS040 STM2GKIS045 STM2GKIS050	STM2HIIS040 STM2HIIS045 STM2HIIS050

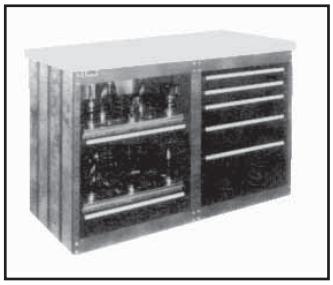

Assembly station STM3

Emply Shelving code 1190-19704 — Dim. 2000 x 600 x 875

A B	A C	F G
STM3AB09CAS	STM3AC15CAS	STM3FG12CAS
A I	G I	G K
STM3AIISO40 STM3AIISO45 STM3AIISO50	STM3GIISO40 STM3GIISO45 STM3GIISO50	STM3GKISO40 STM3GKISO45 STM3GKISO50
G H	H I	STM3HIIS040 STM3HIIS045 STM3HIIS050
STM3GH11CAS		

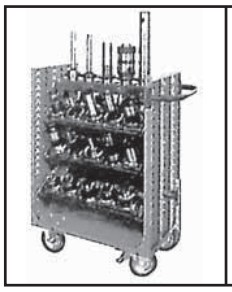

SMS3 Trolley

7 units, SIV and sockets for:

56 ISO40 code 1190-02104
42 ISO45 code 1190-02204
35 ISO50 code 1190-02304

Dim. 790 x 460 x 970

SMS4 Trolley

10 units, SIV and sockets for:

80 ISO40 code 1190-02404
60 ISO45 code 1190-02504
50 ISO50 code 1190-02604

Dim. 790 x 616 x 979

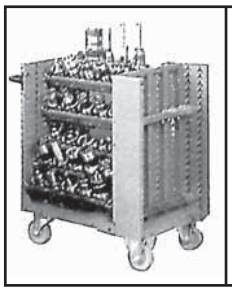

SMS5 Trolley

13 units, SIV and sockets for:

104 ISO40 code 1190-02704
78 ISO45 code 1190-02804
65 ISO50 code 1190-02904

Dim. 948 x 675 x 1016

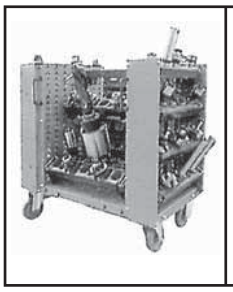

SMS6 Trolley

16 units, SIV and sockets for:

128 ISO40 code 1190-03004
96 ISO45 code 1190-03104
80 ISO50 code 1190-03204

Dim. 981 x 950 x 1016

Tool Trollies & Accessories

Tool Trolleys

SMS 3

1190-009xx SMS 3 tool trolley holds seven tool trays. Comes with four 6” casters and end handle. Assembly required. 31”L x 18” W x 39” H. Wt. Cap. 1000 lbs.

1190-004xx SMS 4 tool trolley moves tools to the job. Add brackets and up to ten tool trays to hold tools. Comes with four 6” casters and end handle. Assembly req’d. 31”L x 24” W x 40” H. Wt. Cap. 2200 lbs.

SMS 4

Accessories

1100-107xx kit comes with additional panels and hardware to turn basic model 1190-004xx into SMS 5 tool trolley. Two 1100-107xx kits turn model SMS 4 into SMS 6. Holds three trays or one row of arbor holders. 26.5” W x 6” D x 32.5” H.

Steel shelf provides additional work space. Comes with rubber mat. Shelf No. 1100-005xx fits on trolley 1190-009xx. 18” W x 12” D x 1.5” H. Shelf No. 1100-004xx fits trolley 1190-004xx. 24” W x 12” D x 1.5” H.

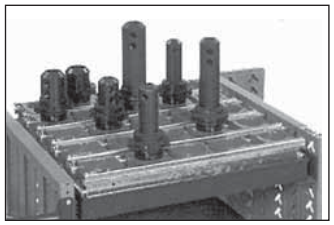

1100-63701 fixed frame requires adjustable tool holder kit 76208. Holds up to five rows of tools. Fits trolley 1190-004xx

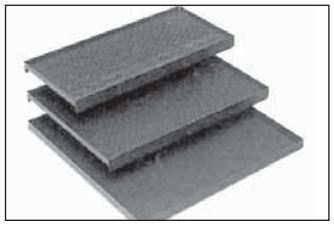

Shelves for trolleys have ribbed rubber mats, 3/4” high shelf edge. Brackets attach to inside trolley walls.
Wt. Cap. 200 lbs.

Model 1100-00801
23.75” W x 22.6” D x 1.75” H
Model 1100-00901
23.75” W x 16.5” D x 1.75” H
Model 1100-01001
23.75” W x 10.25” D x 1.75” H

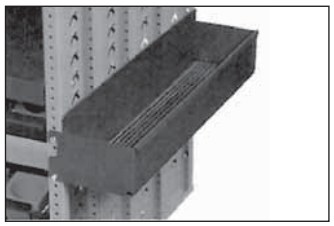

1100-02001 carryall box holds lubricant cans, tools and supplies. Bolts to end of trolley 1190-004xx

xx = 04 LOBSTER ORANGE
12 LIGHT BLUE

Work Bench Assemblies

Work benches for assembly and adjustment of tools

Ideal work station for assembly, adjustment and maintenance of N/C tools and equipment.

The assembly station in the Tool Room has to be provided with all the necessary equipment to assemble, disassemble and adjust both the tools and the racking if downtime on the machines is to be reduced considerably. The work bench top is 1-3/4" wood welded maple. The lower cabinet is provided with sliding drawers on ball bearings. A central closing system locks all the drawers.

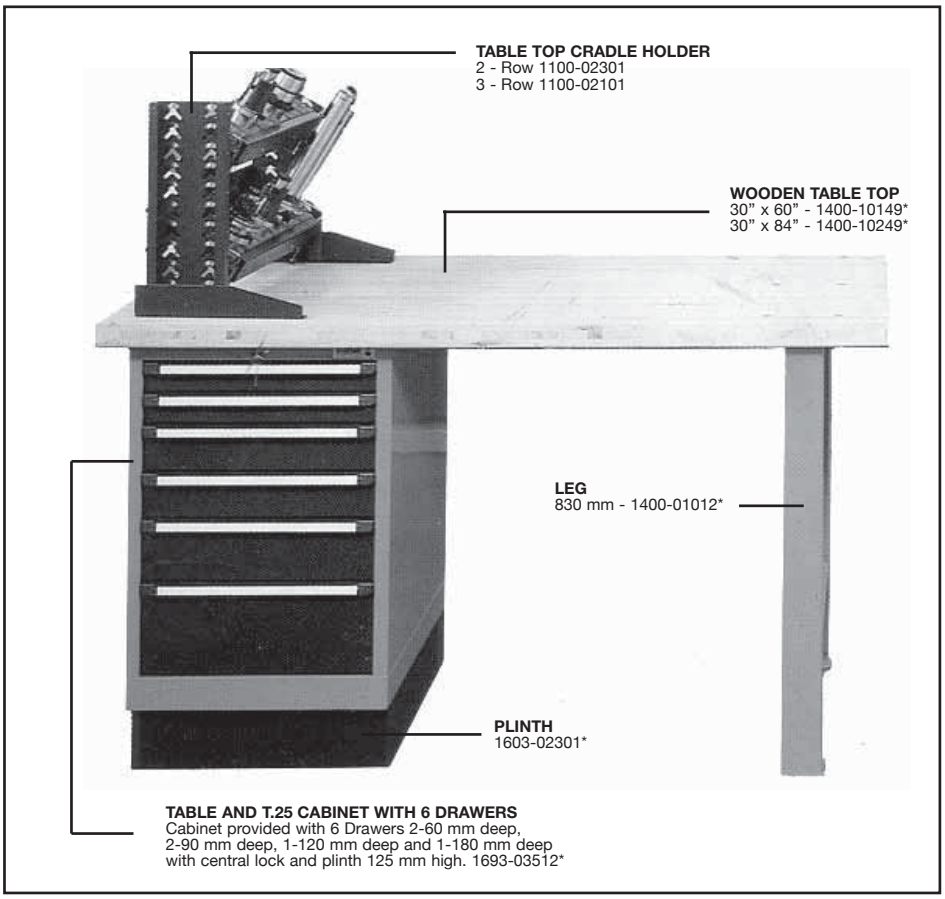

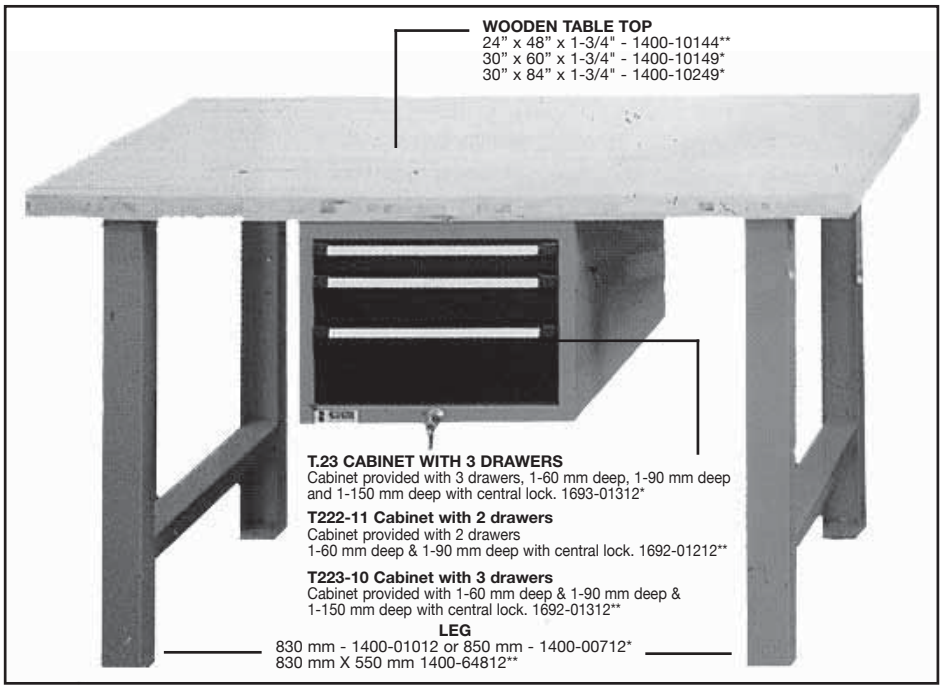

* Items marked with this symbol can only be used together.

** Items marked with this symbol can only be used together.

Machine Tool Cabinets

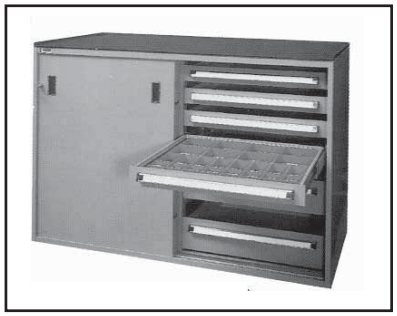

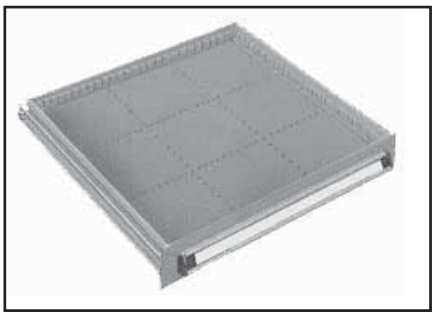

Drawer with Simple Runner

Front Height	Usable Height	Depth	Storage Capacity KG	Order No.
45/45	30	28	60	1000-001xx
60/60	45	40	60	1000-002xx
75/75	60	51	80	1000-003xx
90/90	75	65	100	1000-004xx
105/90	90	65	100	1000-005xx
120/120	105	95	100	1000-006xx
150/150	135	125	100	1000-008xx

A wide diversification of storage shelves to accommodate your individual needs

These cabinets, which have sliding doors, offer extra storage capacity in a smaller space.

The extractable shelf provides a safe storing platform for heavy equipment. One benefit of the full shelf extension is that deposit and retrieval of heavy items is made much easier. Dimensions: 1450 mm wide x 795 mm deep x 1022 mm high. Steel top has raised retaining edges on three sides and is fitted with a rubber mat. Height of top 22m

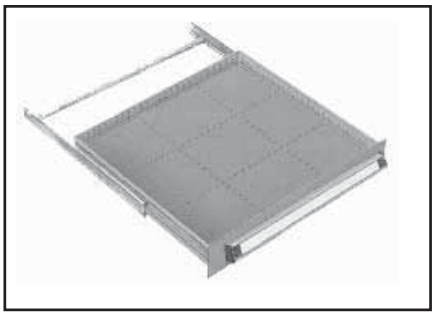

Drawer with Telescopic Runner

Front Height	Usable Height	Depth	Storage Capacity KG	Order No.
75/75	55	51	200	1000-020xx
90/90	70	65	200	1000-021xx
105/90	85	65	200	1000-022xx
120/120	100	95	200	1000-023xx
150/150	130	125	200	1000-025xx
180/150	105	125	200	1000-027xx
210/210	135	185	200	1000-029xx

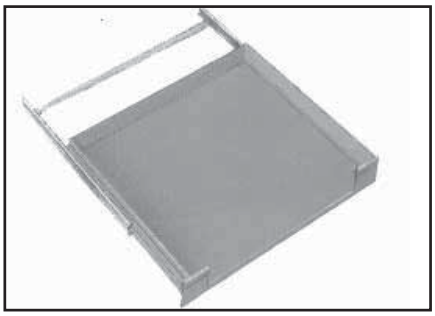

PE Open Front Drawer with Telescopic Runner

L1 1000-120xx

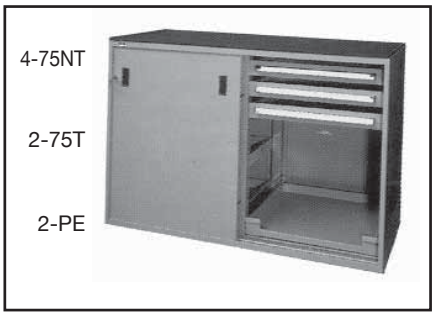

A063AS-02

6 drawers, 2 open-front drawers
1090-387xx

xx = 03 GREEN
04 LOBSTER ORANGE
12 LIGHT BLUE

Drawer Accessories

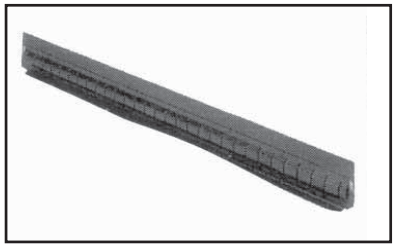

Moveable Slotted Walls

Front Height		Useful Height		AO	SMS 3	SMS 4
AO	SMS	AO	SMS			
45	–	27	–	9910-00134	–	–
60	–	38	–	9910-00234	–	–
75	75	49	60	9910-00334	9900-00101	9916-00101
90-105	110	64	90	9910-00434	9900-00201	9916-00201
120-135	–	94	–	9910-00634	–	–
150-195	150	123	130	9910-00834	9900-00401	9916-00401
210-285	–	183	–	9910-01234	–	–
300-450	–	273	–	9910-01834	–	–

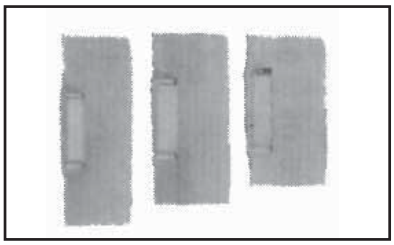

Dividers

Position			4	5	6	7	8	9	10	11
Front Height mm	Plate Height mm	Length mm	76	96	116	136	156	176	196	216
45	22	cod.	0004-50419	0004-50519	0004-50619	0004-50719	0004-50819	0004-50919	0004-51019	0004-51119
60 37	cod.0006-00	4190006-0051	90006-00619	0006-00719	0006-00819	0006-00919	0006-01019	0006-01119		
75 45	cod.0007-50	4190007-5051	90007-50619	0007-50719	0007-50819	0007-50919	0007-51019	0007-51119		
90-105	60	cod.	0009-00419	0009-00519	0009-00619	0009-00719	0009-00819	0009-00919	0009-01019	0009-01119
120	90	cod.	0012-00419	0012-00519	0012-00619	0012-00719	0012-00819	0012-00919	0012-01019	0012-01119
150-180	120	cod.	0015-00419	0015-00519	0015-00619	0015-00719	0015-00819	0015-00919	0015-01019	0015-01119
210-270	180	cod.	–	0021-00519	0021-00619	0021-00719	0021-00819	0021-00919	0021-01019	0021-01119
300-450	270	cod.	–	0030-00519	0030-00619	0030-00719	0030-00819	0030-00919	0030-01019	0030-01119

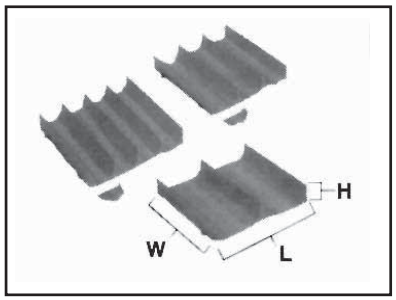

Plastic Groove Trays

Size of Trays	2 Rows	3 Rows	4 Rows
Width mm	71 mm	46 mm	34 mm
Ø Max mm	70 mm	45 mm	33 mm
L W H			
150 x 75 x 28 mm	9900-19718	9900-19818	9900-19918
150 x 100 x 28 mm	9900-18918	9900-19018	9900-19118
150 x 150 x 28 mm	9900-20118	9900-20218	9900-20318
100 x 100 x 28 mm	–	9900-19318	–
100 x 150 x 28 mm	–	9900-19218	–
75 x 100 x 28 mm	9900-19418	–	9900-20018
75 x 150 x 28 mm	9900-19618	–	9900-19918
Dividers	9900-20418	9900-20518	9900-20618

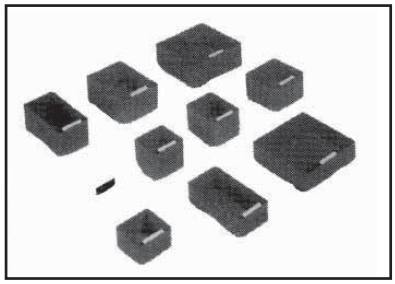

Plastic Boxes

Model	Drawer	Length	Width	Height	Order No.
Art 41	60/75	75	75	40	9900-00818
Art 42	60/75	75	150	40	9900-00918
Art 43	60/75	150	150	40	9900-01018
Art 61	90	75	75	60	9900-01118
Art 62	90	75	150	60	9900-01218
Art 63	90	150	150	60	9900-01318
Art 64	90	100	75	60	9900-07318
Art 65	90	100	100	60	9900-07418
Art 66	90	100	150	60	9900-07518
Label Holder	–	–	–	–	9900-01617

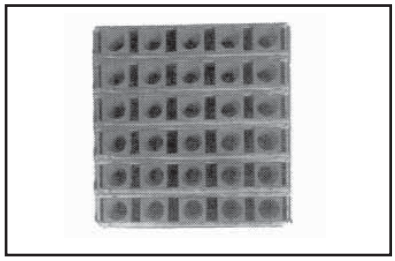

Adjustable Kits for Toolholders in Drawers

AO - Cabinets

Model	Length	Width	Height	Order No.
KIT 4 FILE	618	618	150	1090-48834
KIT 5 FILE	618	618	150	1090-48934
KIT 6 FILE	618	618	150	1090-49034

To be used in 1000-025xx - 150T Drawer

SMS - Cabinets

SMS 4/3	560	560	100	1190-20634
SMS 4/4	560	560	100	1190-20734
SMS 4/5	560	560	100	1190-20834

To be used in 1100-31401 SMS4 Empty Frame Drawer

TECHLEADER® TOOLING INC.

Machinable Wax

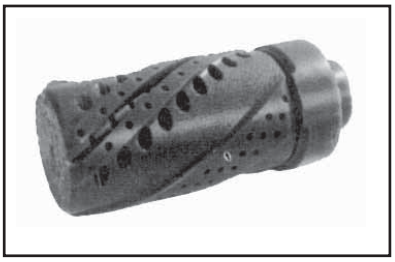

Computervision Corp., leading manufacturer of CAD/CAM systems software used MACHINABLE WAX to produce the drilling tool prototype for the purpose of proving out its 2-axis and 4-axis simultaneous machining software. The resulting prototype was then submitted to their customer for evaluation

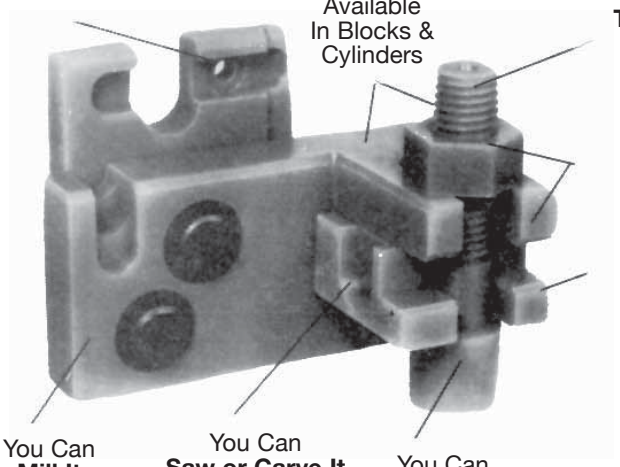

To Reduce Your Costs, Time & Risk Factors When...

- **Proofing CNC Programs**
- **Training CNC Operators & Programmers**
- **Producing Prototypes**
- **Installing & Demonstrating CNC Machinery & Systems**

A State-of-the-Art Material

Computer controlled machining and design methods have revolutionized manufacturing worldwide. Although CNC technology has made it possible to produce accurately finished parts faster, more consistently and economically, the fact remains that most CNC tooling programs have to be proofed before release to production. Of the many materials and methods used to proof CNC tooling programs, MACHINABLE WAX, since 1983, has repeatedly proven to be one of the most widely used because of its ease of machining within tolerance, its reclaimability, the high quality of surface finish it can produce, its versatility of application (even within the medical field) and its formulated properties that make it one of the safest materials to machine with negligible tool wear. MACHINABLE WAX, unlike metal, plastic, wood and other materials, is a non-abrasive, petroleum-base product that is ideal for prototype, modeling and duplication applications because it is self-releasing. Once the wax is machined, molds and models can be made directly from MACHINABLE WAX using castable epoxies or polyurethanes – no time or labor intensive preparation is necessary.

Machines Faster & Accurately

MACHINABLE WAX, as shown by the Computervision, Inc. and Fluid Power Products 'case-in-point' examples, will produce economical, accurate, quality finish results within shorter time frames.

Computervision reported that for the 55 minutes it took to machine the prototype drilling tool in MACHINABLE WAX, it would have taken at least 8 hours to produce the same part in metal.

Fluid Power Products produced the model pump shown in one-sixth the time it would have taken machining it in metal - and, the parts were accurate enough to assemble the unit complete with metal shaft and gears for customer evaluation.

Fluid Power Products, Inc., of Kenner, LA is a manufacturer of low pressure high volume hydraulic pumps. Their use of MACHINABLE WAX to produce the prototype shown above was successful because of its ability to be machined within ± .001 tolerances (on a Bridgeport CNC Milling Machine) @ 3,000 rpm and feed rates up to 100 / min. Other machining operations consisted of turning and boring on a Mazak Lathe @ 150 rpm and drilling / tapping by hand. In all operations, no coolant or cutting fluids were necessary.

Economical

Because Techleader Machinable Wax is recyclable and remachinable, it will provide you with a very cost-effective and profitable means of proofing, prototyping, modeling and for use in training applications.

Safe To Work With ... Non-Toxic

Techleader Machinable Wax is patented and formulated to be a safe material to work with. MACHINABLE WAX can be machined at any speed and will not produce sharp chips or hazardous dust particles. And, because of its 575 degrees Fahrenheit flash point, high speed machining will not have any adverse effect on it. Because MACHINABLE WAX is safe to work with, it makes an ideal material for training CNC programmers and operators.

Recyclable & Reusable

Get The Facts On MACHINABLE WAX

Find out how Techleader Machinable Wax can help you address your CNC proofing and prototype problems.

TECHLEADER® TOOLING INC.

Machinable Wax

Reduces Time and Material Costs for NC/CNC Tape Proofing

Ideal for NC/CNC Training Programs

BLOCKS

Order No.	Height Inches	Width Inches	Length Inches
108-011	1.5	3	7
108-012	1.5	3	7*
108-021	3	3	7
108-022	3	3	7*
108-031	3	4.5	7
108-032	3	4.5	7*
108-051	3	5	10
108-052	3	5	10*
108-071	3	6	12
108-072	3	6	12*

* mounted

CYLINDERS

Order No.	DIA Nominal	DIA Typical	STD Length
108-115	1.5	(1.56)	12
108-125	2	(2.01)	12
108-135	3	(2.99)	12
108-145	4	(3.91)	14
108-155	5	(4.91)	16
108-165	6	(5.88)	18
108-175	7	(6.90)	18
108-195	9	(6.64)	18

2" THICK BLOCKS

Order No.	Height Inches	Width Inches	Length Inches
108-250	2	6	6
108-252	2	6	12
108-254	2	6	18
108-256	2	6	24
108-258	2	6	30
108-260	2	6	36
108-262	2	6	42
108-264	2	6	48
108-266	2	12	12
108-268	2	12	18
108-270	2	12	24
108-272	2	12	30
108-274	2	12	36
108-276	2	12	42
108-278	2	12	48
108-280	2	18	18
108-282	2	18	24
108-284	2	18	30
108-286	2	18	36
108-288	2	18	42
108-290	2	18	48
108-222	2	24	24
108-292	2	24	30
108-294	2	24	36
108-296	2	24	42
108-298	2	24	48

3" THICK BLOCKS

Order No.	Height Inches	Width Inches	Length Inches
108-300	3	6	6
108-302	3	6	12
108-304	3	6	18
108-306	3	6	24
108-308	3	6	30
108-310	3	6	36
108-312	3	6	42
108-314	3	6	48
108-316	3	12	12
108-318	3	12	18
108-320	3	12	24
108-322	3	12	30
108-324	3	12	36
108-326	3	12	42
108-328	3	12	48
108-330	3	18	18
108-332	3	18	24
108-334	3	18	30
108-336	3	18	36
108-338	3	18	42
108-340	3	18	48
108-342	3	24	24
108-344	3	24	30
108-346	3	24	36
108-348	3	24	42
108-243	3	24	48

4" THICK BLOCKS

Order No.	Height Inches	Width Inches	Length Inches
108-350	4	6	6
108-352	4	6	12
108-354	4	6	18
108-356	4	6	24
108-358	4	6	30
108-360	4	6	36
108-362	4	6	42
108-364	4	6	48
108-366	4	12	12
108-368	4	12	18
108-370	4	12	24
108-372	4	12	30
108-374	4	12	36
108-376	4	12	42
108-378	4	12	48
108-380	4	18	18
108-382	4	18	24
108-384	4	18	30
108-386	4	18	36
108-388	4	18	42
108-390	4	18	48
108-392	4	24	24
108-394	4	24	30
108-396	4	24	36
108-398	4	24	42
108-244	4	24	48

5" THICK BLOCKS

Order No.	Height Inches	Width Inches	Length Inches
108-400	5	6	6
108-402	5	6	12
108-404	5	6	18
108-406	5	6	24
108-408	5	6	30
108-410	5	6	36
108-412	5	6	42
108-414	5	6	48
108-416	5	12	12
108-418	5	12	18
108-420	5	12	24
108-422	5	12	30
108-424	5	12	36
108-426	5	12	42
108-428	5	12	48
108-430	5	18	18
108-432	5	18	24
108-434	5	18	30
108-436	5	18	36
108-438	5	18	42
108-440	5	18	48
108-442	5	24	24
108-444	5	24	30
108-446	5	24	36
108-448	5	24	42
108-245	5	24	48

6" THICK BLOCKS

Order No.	Height Inches	Width Inches	Length Inches
108-450	6	6	6
108-452	6	6	12
108-454	6	6	18
108-456	6	6	24
108-458	6	6	30
108-460	6	6	36
108-462	6	6	42
108-464	6	6	48
108-466	6	12	12
108-468	6	12	18
108-470	6	12	24
108-472	6	12	30
108-474	6	12	36
108-476	6	12	42
108-478	6	12	48
108-480	6	18	18
108-482	6	18	24
108-484	6	18	30
108-486	6	18	36
108-488	6	18	42
108-490	6	18	48
108-492	6	24	24
108-494	6	24	30
108-496	6	24	36
108-498	6	24	42
108-246	6	24	48

7" THICK BLOCKS

Order No.	Height Inches	Width Inches	Length Inches
108-500	7	6	6
108-502	7	6	12
108-504	7	6	18
108-506	7	6	24
108-508	7	6	30
108-510	7	6	36
108-512	7	6	42
108-514	7	6	48
108-516	7	12	12
108-518	7	12	18
108-520	7	12	24
108-522	7	12	30
108-524	7	12	36
108-526	7	12	42
108-528	7	12	48
108-530	7	18	18
108-532	7	18	24
108-534	7	18	30
108-536	7	18	36
108-538	7	18	42
108-540	7	18	48
108-542	7	24	24
108-544	7	24	30
108-546	7	24	36
108-548	7	24	42
108-550	7	24	48

8" THICK BLOCKS

Order No.	Height Inches	Width Inches	Length Inches
108-552	8	6	6
108-554	8	6	12
108-556	8	6	18
108-558	8	6	24
108-560	8	6	30
108-562	8	6	36
108-564	8	6	42
108-566	8	6	48
108-568	8	12	12
108-570	8	12	18
108-572	8	12	24
108-574	8	12	30
108-576	8	12	36
108-578	8	12	42
108-580	8	12	48
108-582	8	18	18
108-584	8	18	24
108-586	8	18	30
108-588	8	18	36
108-590	8	18	42
108-592	8	18	48
108-594	8	24	24
108-596	8	24	30
108-598	8	24	36
108-600	8	24	42
108-248	8	24	48

SECTION 2

Spindle Speeders & Angle Heads

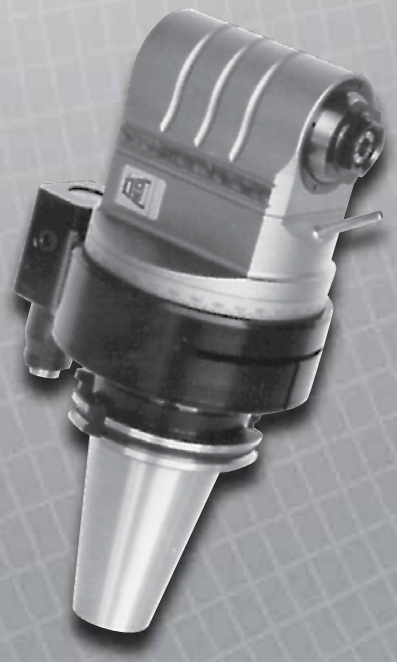

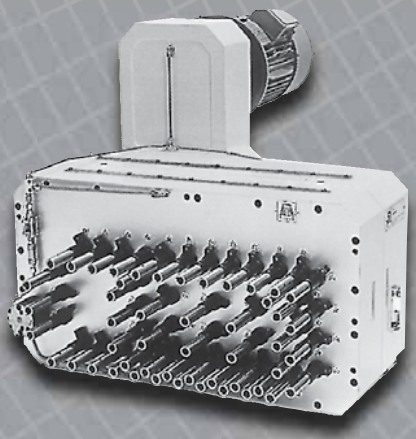

Spindle Speeders

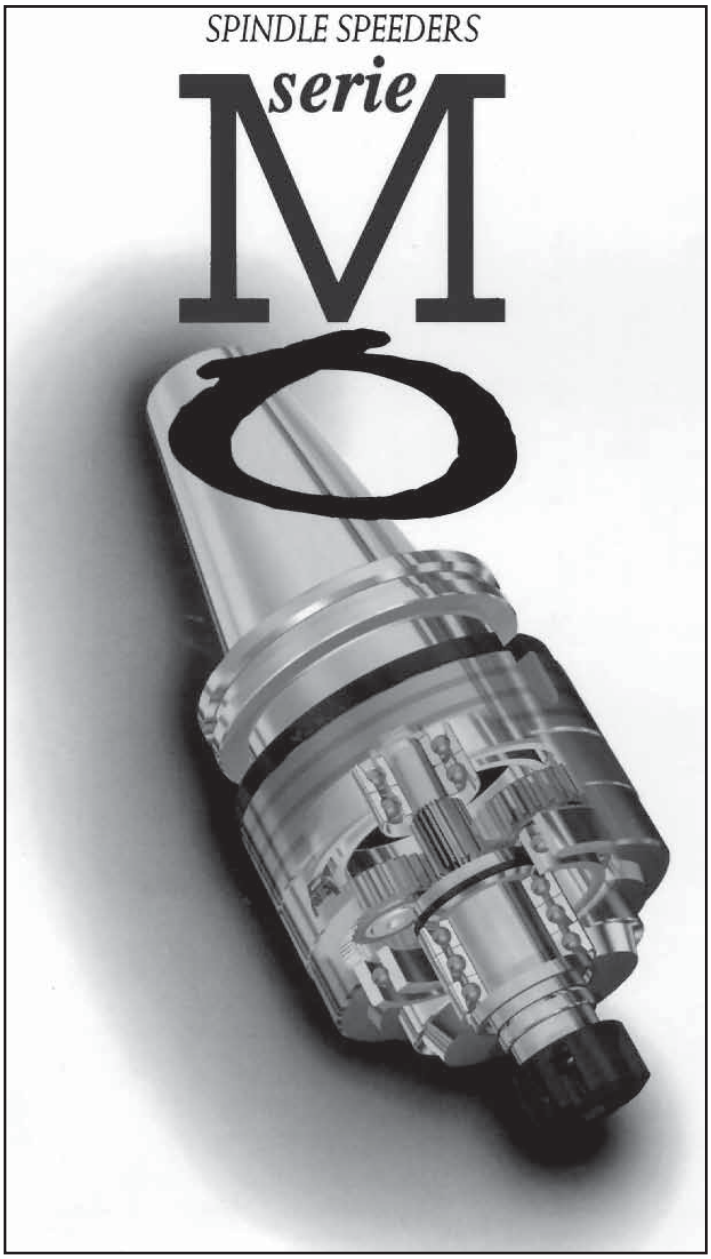

Each spindle speeder has its own test certificate which includes the technical characteristics, the serial number, the results of the tests made on our BP01 testing table, and the concentricity value between the shank and the collet. (max value 0.01 mm.) To verify the concentricity value it is necessary to have the spindle speeders stopping the pin and rotating the shank. The value on the metric comparator is the concentricity between the axis of the shank and the axis of the spindle.

The 'MO' spindle speeders series have been designed and developed to offer a product that ensures maximum reliability and precision in milling and drilling operations. From the design to the static and dynamic testing of the finished product, our spindle speeders series utilize the most advanced technical and technological know-how.

- Max. continuous rpm 18,000 (higher ratings on request)
- Used particularly in finishing operations
- Possibility of manual or automatic mounting
- Allows the machine to rotate at low rpm
- Possibility of using hard metal tools

The compact construction, the heat-treated steel part and the ground gears on the involute guarantee the transmission of high power ratings with amazingly low noise levels. The spindle is supported by a set of two and three preloaded precision ball bearings with oblique contact that ensure enhanced stiffness and rotation precision of 0.01 mm / 0.0004".

- Cone solidly connected with the spindle seat
- Two or three planetary gears for high transmission power ratings
- Special tool attachment, on request (Komet, DIN 1835, etc.)
- Liquid coolant fed through tool centre, on request
- Special machine attachment, on request (HSK, Morse Cone, DIN 69880, etc.)
- Interchangeable anti-rotation pin which can be customized by the buyer

The spindle speeders series can be mounted on traditional machines or machines with an automatic tool changer. In the latter case an anti-rotation unit will be supplied that can turn 360 degrees. The spindle speeders series is lubricated with a long-life synthetic grease that is practically maintenance free. The testing certificate attached to each spindle speeders series guarantees the quality of the product. Our spindle speeders have always been recognized for their strength, versatility, easy use and maintenance.

Spindle Speeders
Performance Charts

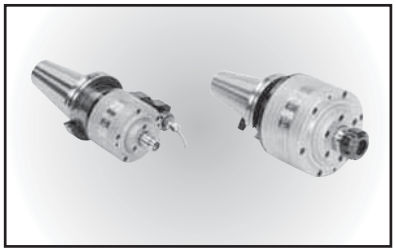

Performances

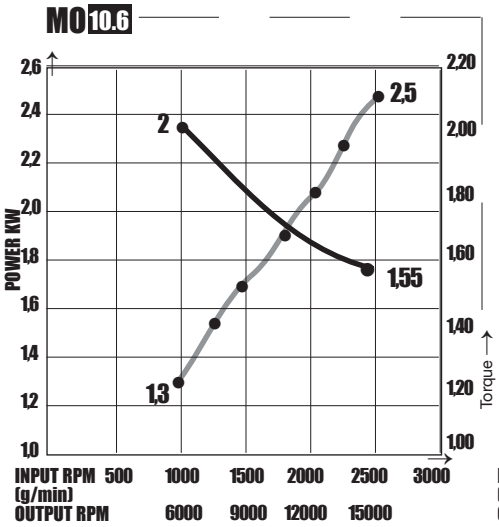

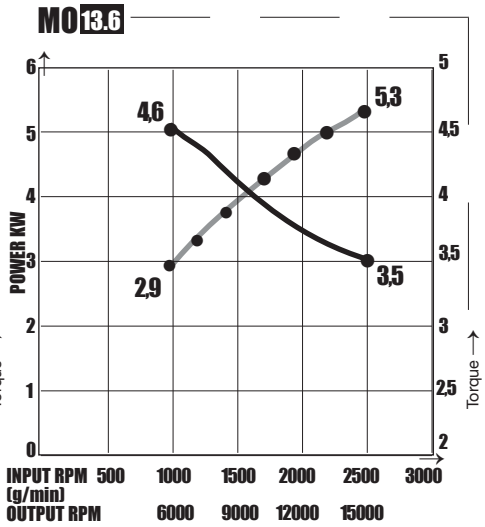

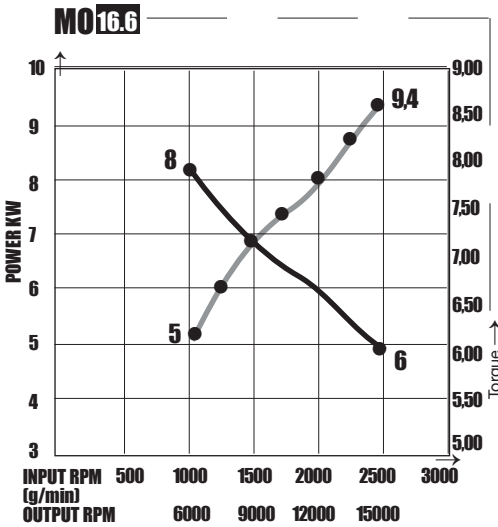

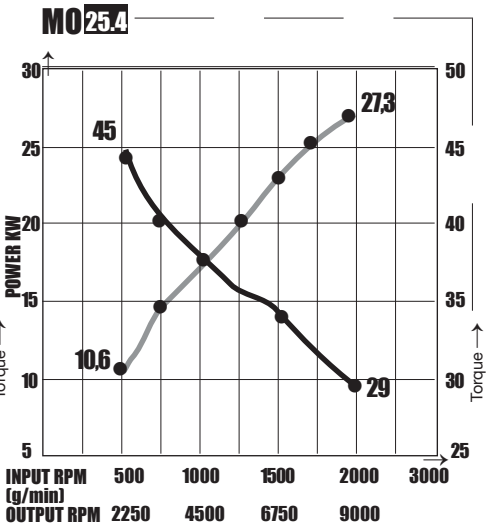

Max. Axial Thrust on the Spindle

Spindle speeder type	Axial thrust
MO 10.6	70
MO 13.6	110
MO 16.6	125
MO 25.4	300

Power
Max. torque

Spindle Speeders

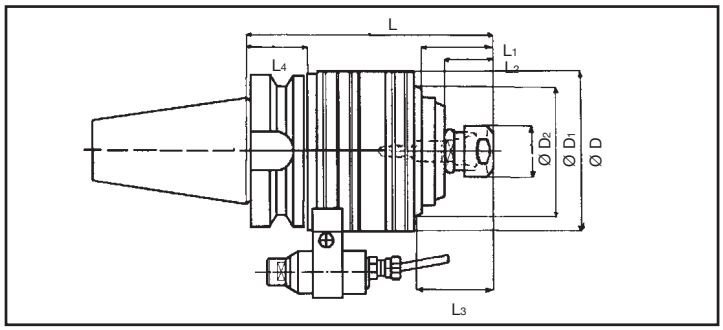

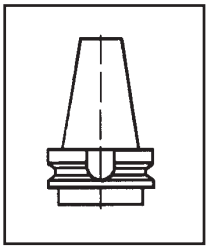

With BT Shank
MAS403BT

Type	MO 10.6			MO 13.6		MO 16.6	MO 25.4*
SHANK	30	40	50	40	50	50	50
ORDER NO.	MO106B30	MO106B40	MO106B50	MO136B40	MO136B50	MO166B50	MO254B50
RATIO	1-6			1-6		1-6	1-4,5
RPM**	22,000			15,000		12,000	10,000
WEIGHT KG	3,3	3,7	6,5	5,9	8	10	18,5
COLLET	ECX 16 max ø10			ECX 20 max ø13		ECX 25 max ø16	ECX 40 max ø26
D (mm)	84			105		123	169
D_1 (mm)	55			72		85	120
D_2 (mm)	24			35		42	63
L (mm)	136,5	134	145	152	163	170	202
L_1 (mm)	42			47		44	67,5
L_2 (mm)	30			31,5		32,5	40,5
L_3 (mm)	40			50		52	64
L_4 (mm)	32,5	30	41	30		41	41

With CT Shank

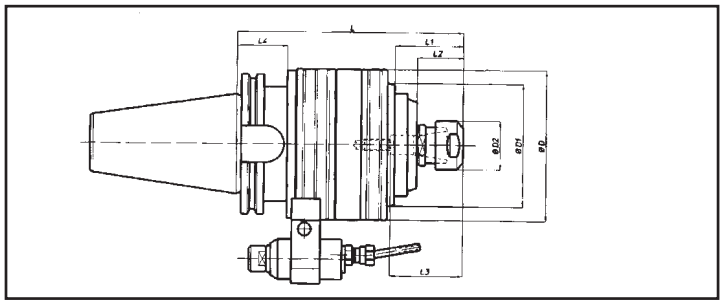

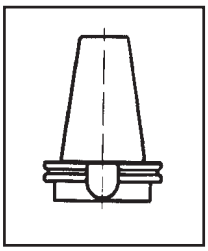

Type	MO 10.6			MO 13.6		MO 16.6	MO 25.4*
SHANK	30	40	50	40	50	50	50
ORDER NO.	MO106C30	MO106C40	MO106C50	MO136C40	MO136C50	MO166C50	MO254C50
RATIO	1-6			1-6		1-6	1-4,5
RPM**	22,000			15,000		12,000	10,000
WEIGHT KG	3,3	3,7	6,5	5,8	8	10	18,5
COLLET	ECX 16 max ø10			ECX 20 max ø13		ECX 25 max ø16	ECX 40 max ø26
D (mm)	84			105		123	169
D_1 (mm)	55			72		85	120
D_2 (mm)	24			35		42	63
L (mm)	139	139	139	163	157	164	196
L_1 (mm)	42			47		44	67,5
L_2 (mm)	30			31,5		32,5	40,5
L_3 (mm)	40			50		52	64
L_4 (mm)	35			35		35	35

* These units cannot be used with automatic tool change. It can only be put manually into the spindle.
** Speed @ 100% duty cycle.

Spindle Speeders

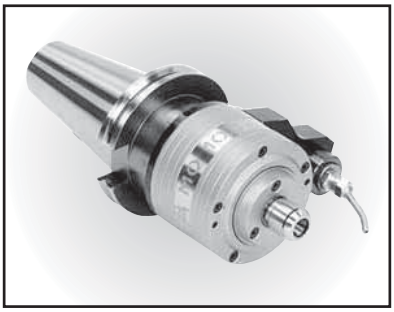

With NMTB Shank

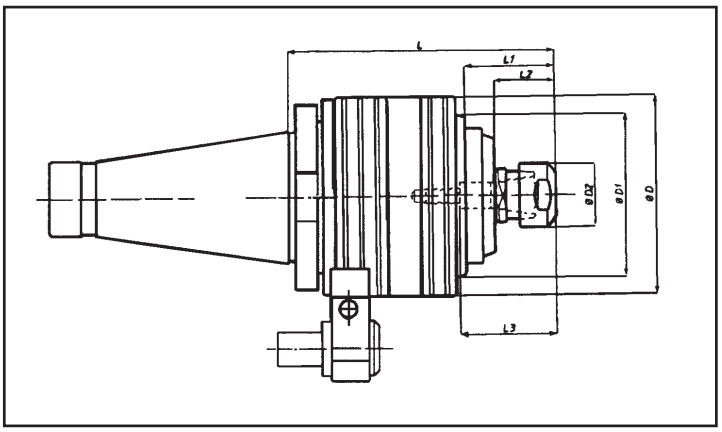

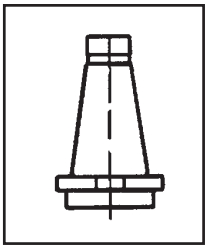

Type	MO 10.6			MO 13.6		MO 16.6		MO 25.4*
SHANK	30	40	50	40	50	40	50	50
ORDER NO.	MO106N30	MO106N40	MO106N50	MO136N40	MO136N50	MO166N40	MO166N50	MO254N50
RATIO	1-6			1-6		1-6		1-4,5
RPM	22,000			15,000		12,000		10,000
WEIGHT KG	3	3	6,3	5	7,3	7,4	9,3	18,5
COLLET	ECX 16 max ø10			ECX 20 max ø13		ECX 25 max ø16		ECX 40 max ø26
D (mm)	84			105		123		169
D_1 (mm)	55			72		85		120
D_2 (mm)	24			35		42		63
L (mm)	126	119	122	136,5	140	147,5	147,5	184,5
L_1 (mm)	42			47		44		67,5
L_2 (mm)	30			31,5		32,5		40,5
L_3 (mm)	40			50		52		64

* These units cannot be used with automatic tool change. It can only be put manually into the spindle.
** Speed @ 100% duty cycle.

Spindle Speeders Torque Arm

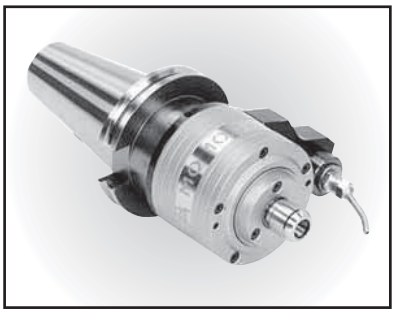

Torque Arm For CT Shank

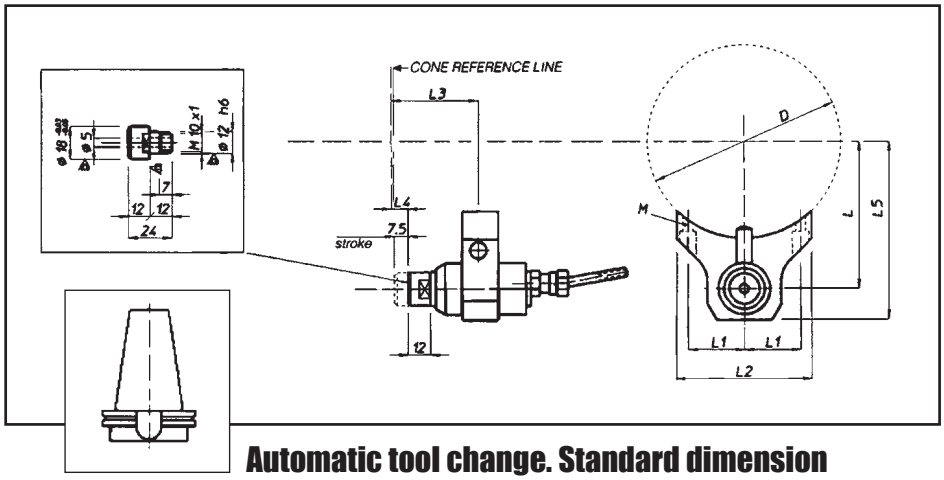

Automatic tool change. Standard dimension

Type	L With Shank			L1	L2	L3 With Shank			L4 With Shank			M	D
	30	40	50			30	40	50	30	40	50		
MO 10.6	65	65	80	29,5	70	50	50	50	9	9	9	M5	84
MO 13.6	–	80	80	30,5	71,5	–	53,5	47,5	–	15	9	M5	105
MO 16.6	–	–	80	31	75	–	–	47,5	–	–	9	M6	123

Torque Arm For BT Shank

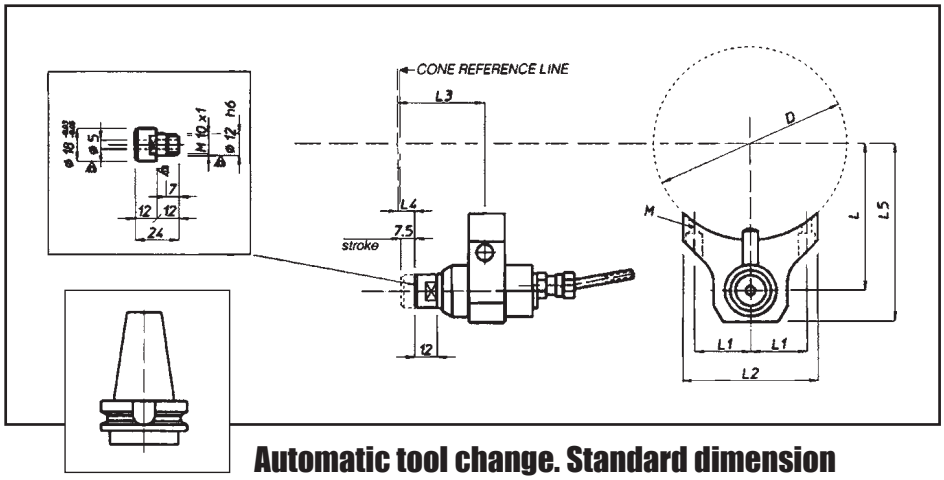

Automatic tool change. Standard dimension

Type	L With Shank			L1	L2	L3 With Shank			L4 With Shank			M	D
	30	40	50			30	40	50	30	40	50		
MO 10.6	65	65	80	29,5	70	47,5	45	56	6,5	4	15	M5	84
MO 13.6	–	80	80	30,5	71,5	–	42,5	53,5	–	4	15	M5	105
MO 16.6	–	–	80	31	75	–	–	53,5	–	–	15	M6	123

Spindle Speeders
Torque Arm & Stop Block

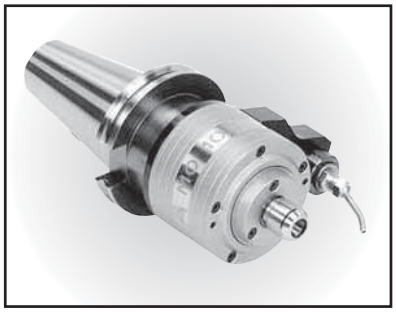

Torque Arm For NMTB

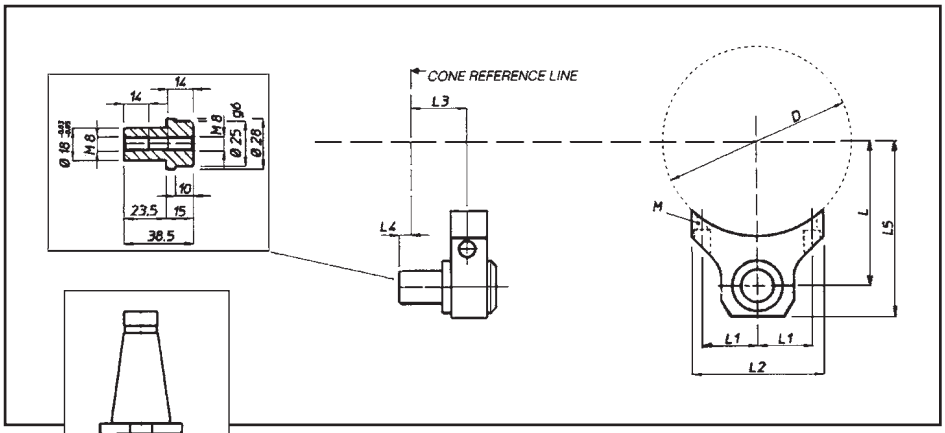

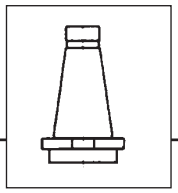

Standard dimension

Type	L With Shank			L1	L2	L3 With Shank			L4 With Shank			M	D
	30	40	60			30	40	50	30	40	50		
MO 10.6	65	65	80	29,5	70	37,5	30	30	2,5	10	10	M5	84
MO 13.6	–	80	80	30,5	71,5	–	27	30,5	–	10,5	7	M5	105
MO 16.6	–	80	80	31	75	–	31	31	–	6,5	6,5	M6	123

Stop Block

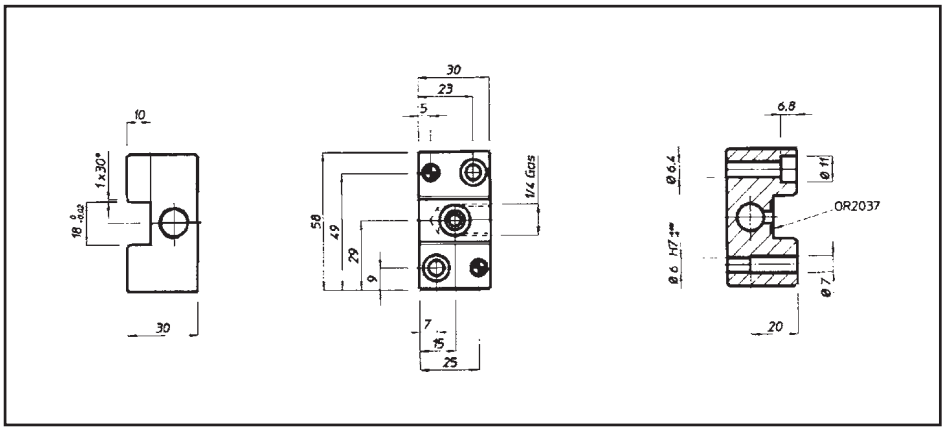

Spindle Speeders
Special Execution Coolant Flow

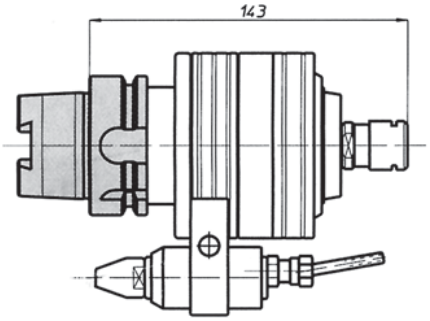

MO 10.6

WITH SHANK DIN 69893 HSK - A63
RPM MAX 30.000

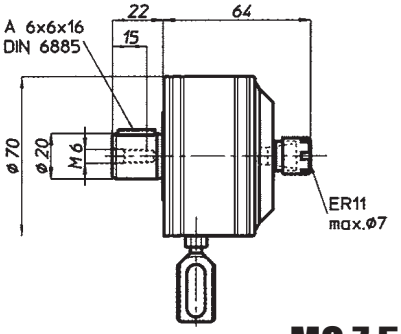

MO 7.5

RATIO 1-5
MAX RPM 8.000

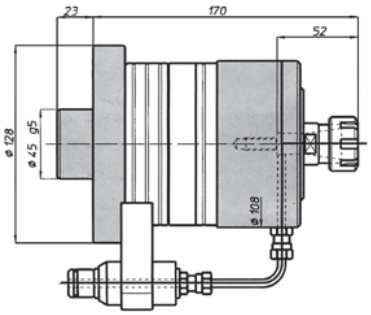

MO 13.6

WITH SPECIAL SHAFT
AND COOLANT THROUGH
THE OUTPUT SPINDLE

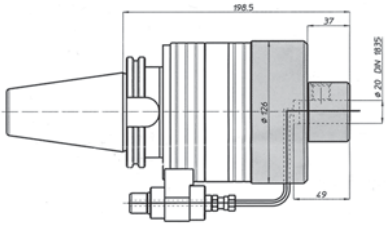

MO 16.6

WITH SHANK DIN 69871-50 CONNECTING
DIN 1835 Ø20 WITH COOLANT THROUGH
THE OUTPUT SPINDLE

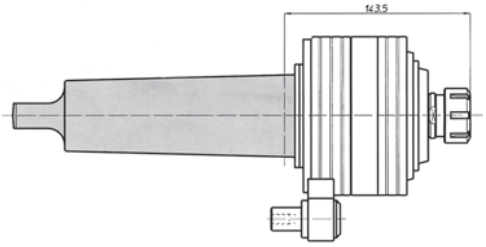

MO 10.6

WITH SHANK MT 6 DIN 228

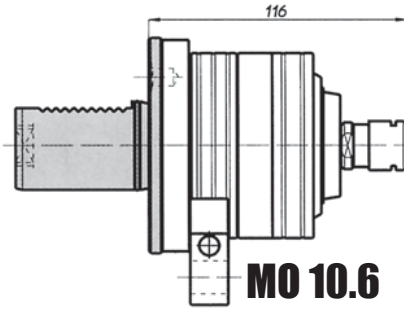

MO 10.6

WITH SHANK VDI 40

Angle Heads

Techleader/O.M.G. angle heads series TA have been manufactured to solve drilling, tapping and milling problems. The angle heads reach where horizontal or vertical machine tools do not permit a reduction in the cost and time of machining. Techleader/O.M.G have a complete range of angle heads as follows:

TA: The inclination of the spindle is 90º

TA...2: 2 opposite spindles

TA...D: Single-spindle with internal coolant through output spindle

TAV: The angular position of the spindle is adjustable from +90º to -90º.

TAF: The angular position of the fix spindle is made according to customer requests. Special angle heads manufactured according to customer requests.

Techleader/O.M.G. angle heads can be used on conventional machine tools, on machining centers with automatic tool change and on turning centers with motorized turret. These heads are designed for high rigidity and precision. We achieve this by using Gleason precision spiral-bevel gears and high precision bearings. The standard anti-rotating system can be easily positioned. Where more rigidity in the application is required, we suggest using our TRIBLOCK system. Also our units can have the option to have coolant through the spindle via the anti rotating system and a distributor cap on the rear of the output spindle. Upon request, the angle heads can be customized and supplied with:

- ✔ Machine connection (CT, BT, HSK, NMTB, DIN 69880, etc.)
- ✔ Internal coolant through the tool
- ✔ Special tool connection (ABS, DIN 1835, etc.)

The angle head series TA has been studied and defined by computerized systems to add to the knowledge of Techleader/O.M.G.'s 40 years experience in the sector. This has allowed us to make innovative selections in the materials, in the thermal treatments and in the precision machining in order to maintain high precision, rigidity, hardness and top quality.

TAF13P - Fixed Angle Heads

TAF13P - CT40
TAF13P - MAS 403-BT40
TAF13P - CT50
TAF13P - MAS 403-BT50
TAF13P - NMTB-50

Ø13 1/2”	M10 3/8”	1-1	4000	6.5-40 8.5-50

BT40
BT50
CT50
CT40
NMTB50

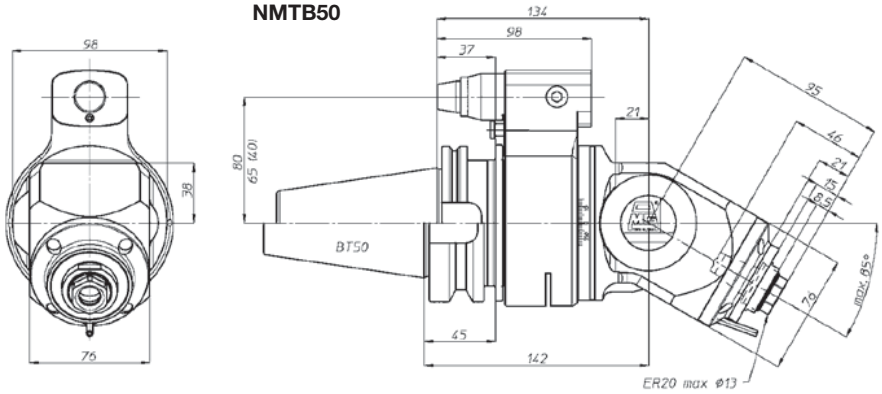

HSKA63
HSKA80
HSKA100

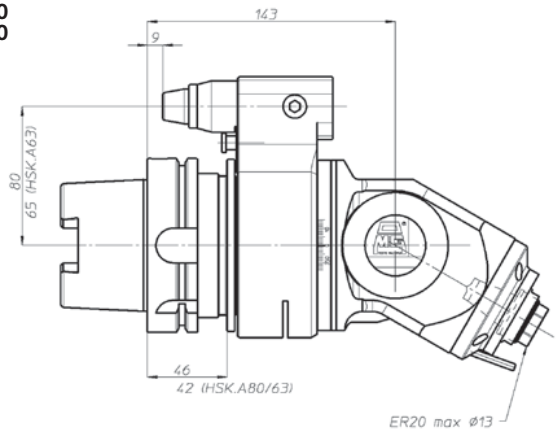

Power
Max. Torque

TAF13P

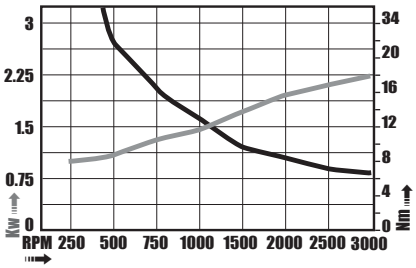

Taper	Order No.	Device Type	Output Spindle Collet Style	Max Capacity Ø
BT40	TAF13PB40	BT40 - TAF13P	ECX/ER20	13mm (1/2")
BT50	TAF13PB50	BT50 - TAF13P	ECX/ER20	13mm (1/2")
CT40	TAF13PC40	CT40 - TAF13P	ECX/ER20	13mm (1/2")
CT50	TAF13PC50	CT50 - TAF13P	ECX/ER20	13mm (1/2")
HSK63A	TAF13PH63	HSK63A - TAF13P	ECX/ER20	13mm (1/2")
HSK80A	TAF13PH80	HSK80A - TAF13P	ECX/ER20	13mm (1/2")
HSK100A	TAF13PH100	HSK100A - TAF13P	ECX/ER20	13mm (1/2")
NMTB50	TAF13PN50	NMTB50 - TAF13P	ECX/ER20	13mm (1/2")

TAF20P - Fixed Angle Heads

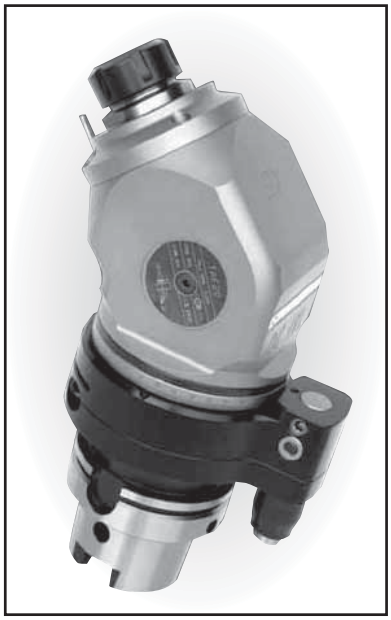

TAF20P - CT50
TAF20P - MAS403-BT50
TAF20P - NMTB 50

Ø 20 3/4”	M16 5/8”	1-1	3000	13.5 50

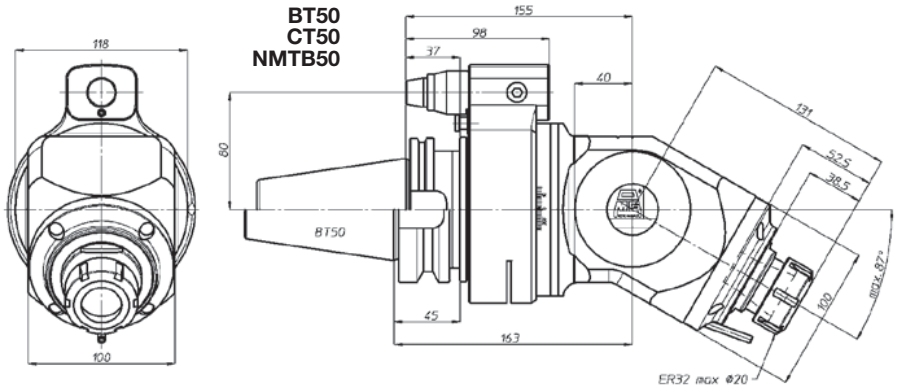

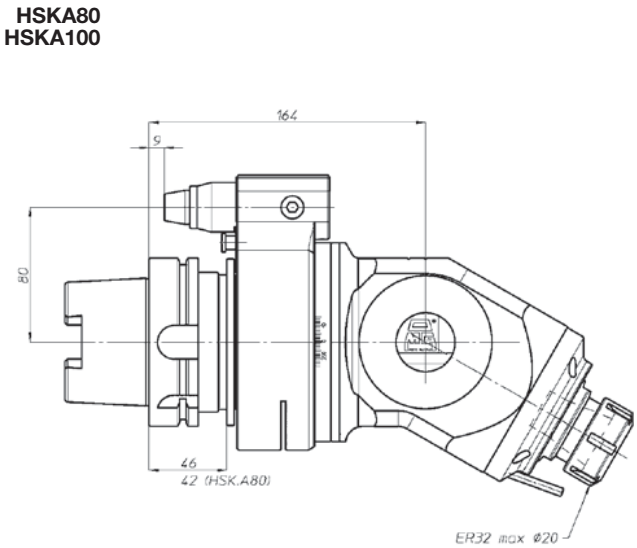

Power

Max. Torque

TAF20P

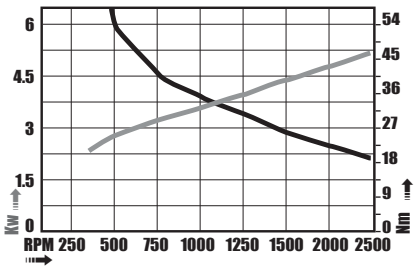

Taper	Order No.	Device Type	Output Spindle Collet Style	Max Capacity Ø
BT50	TAF20PB50	BT50 - TAF20P	ECX/ER32	20mm(3/4")
CT50	TAF20PC50	CT50 - TAF20P	ECX/ER32	20mm(3/4")
HSK80A	TAF20PH80	HSK80A - TAF20P	ECX/ER32	20mm(3/4")
HSK100A	TAF20PH100	HSK100A - TAF20P	ECX/ER32	20mm(3/4")
NMTB50	TAF20PN50	NMTB50 - TAF20P	ECX/ER32	20mm(3/4")

TA04P - Right Angle Heads

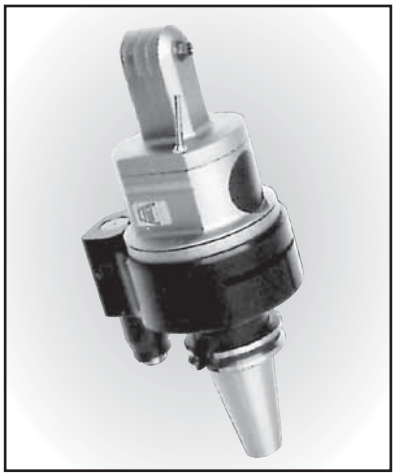

TA04P-BT40 TA04P-BT50
TA04P-CT40 TA04P-CT50

Ø 4	M3	1-1	8000 Rpm	5.5-40 7.5-50 Kg

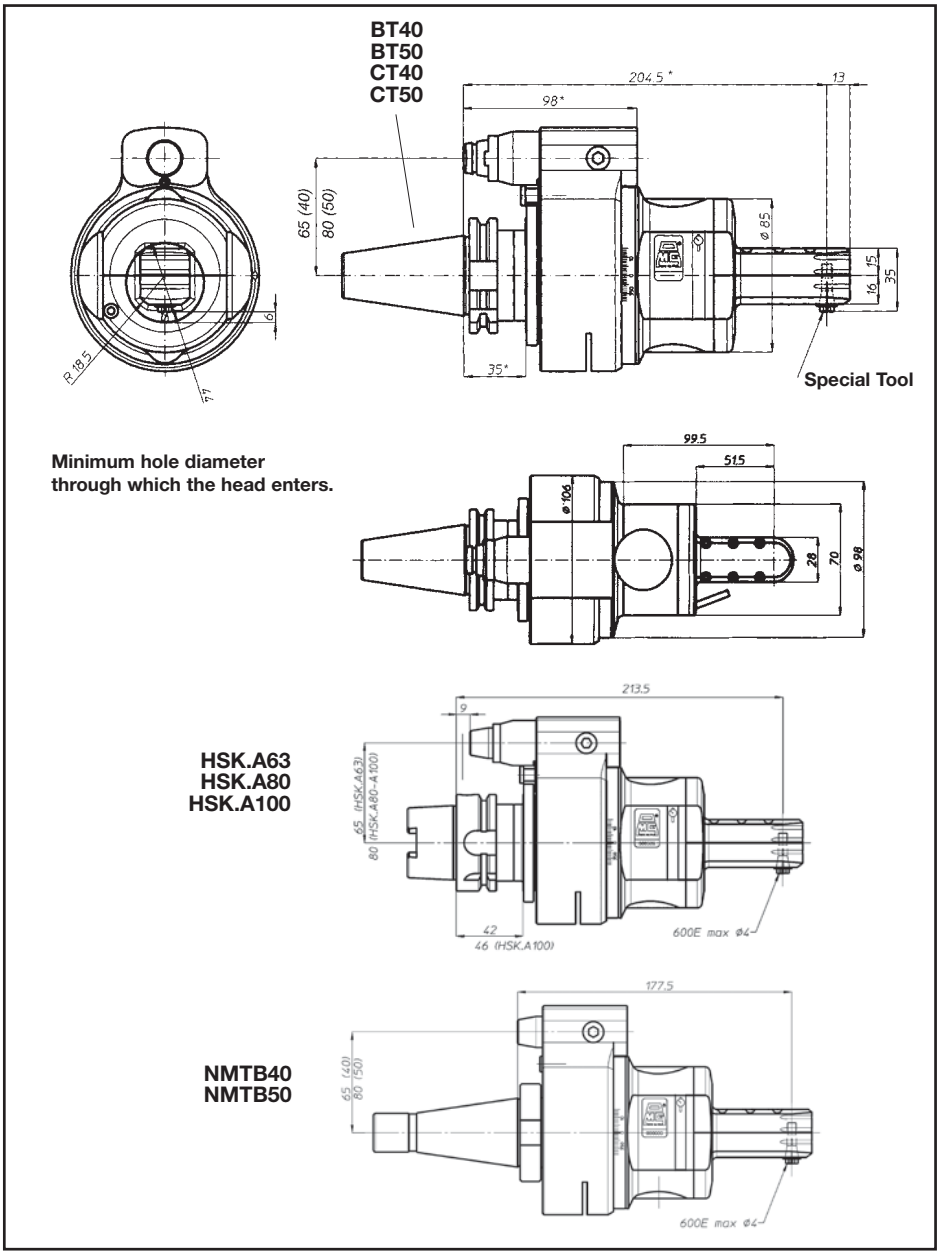

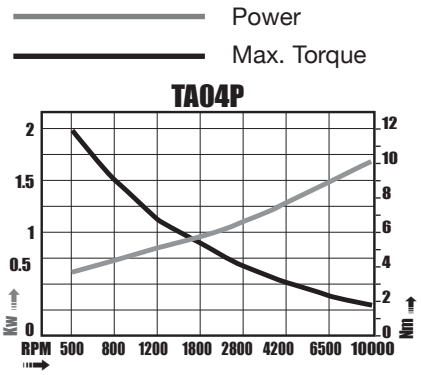

Taper	Order No.	Device Type	Output Spindle Collet Style	Max Capacity Ø
BT40	TA04PB40	BT40 - TA04P	600E	4.0 mm
BT50	TA04PB50	BT40 - TA04P	600E	4.0 mm
CT40	TA04PC40	CT40 - TA04P	600E	4.0 mm
CT50	TA04PC50	CT50 - TA04P	600E	4.0 mm
HSK63A	TA04PH63	HSK63 - TA04P	600E	4.0 mm
HSK80A	TA04PH80	HSK80 - TA04P	600E	4.0 mm
HSK100A	TA04PH100	HSK100 - TA04P	600E	4.0 mm
NMTB40	TA04PN40	NMTB40 - TA04P	600E	4.0 mm
NMTB50	TA04PN50	NMTB50 - TA04P	600E	4.0 mm

* Increase the quote by 8 mm when using BT50 shank.

TA06P - Right Angle Heads

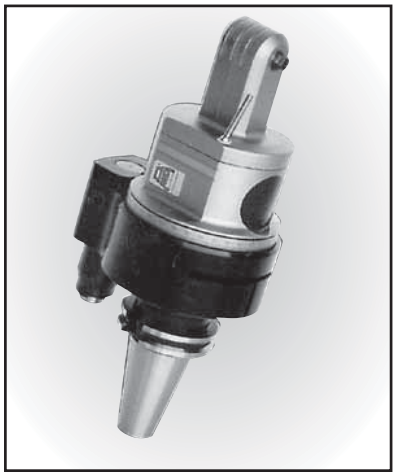

TA06P-BT40, TA06P-BT50
TA06P-CT40, TA06P-CT50

			Rpm	Kg
Ø 6 mm	M5	1-1	8000	5-40 7-50

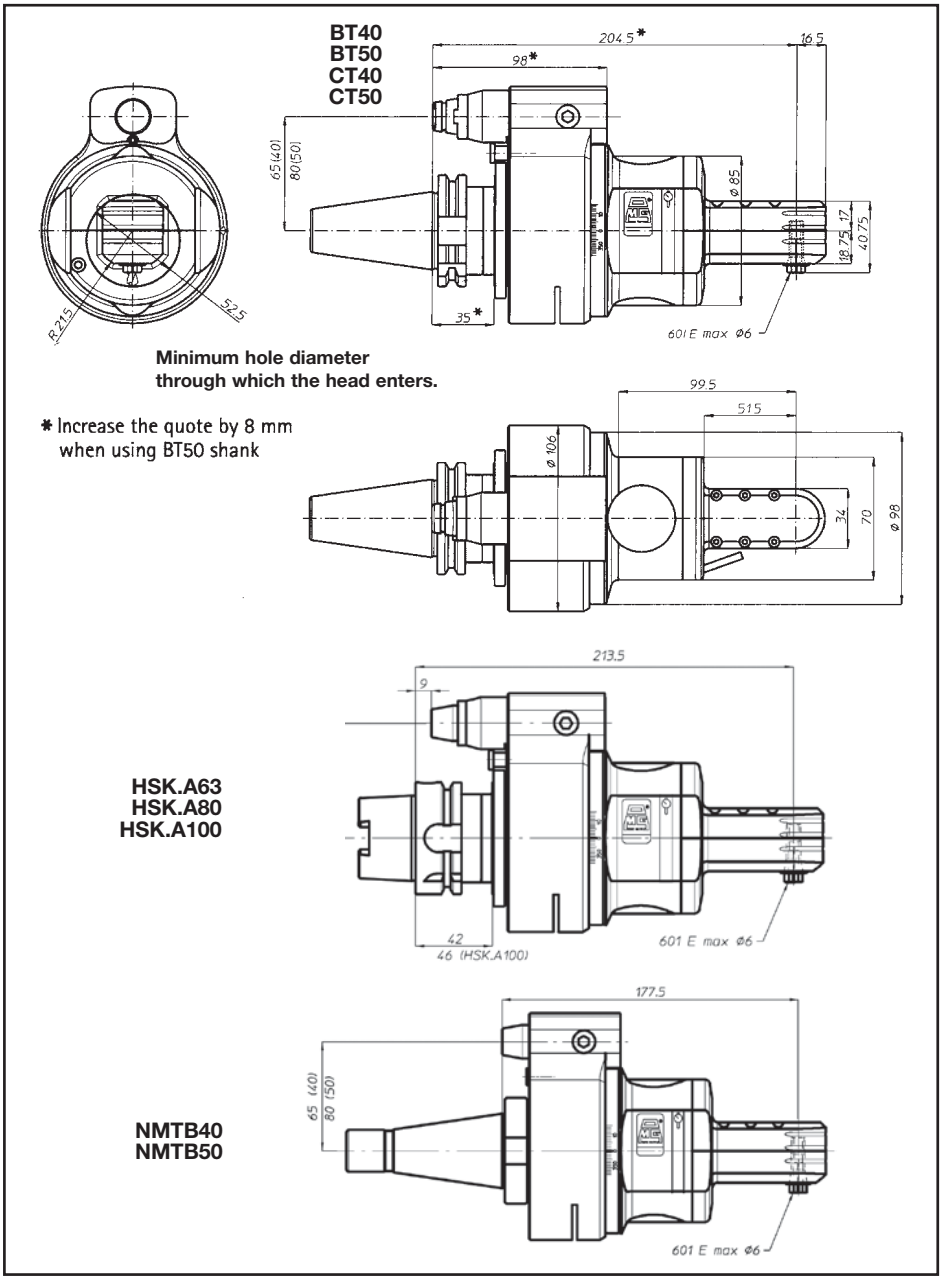

Power

Max. Torque

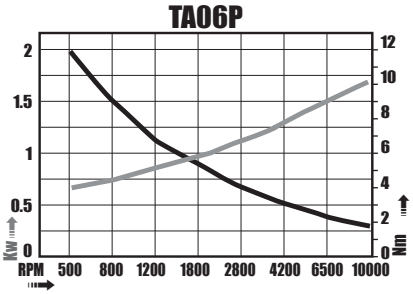

Taper	Order No.	Device Type	Output Spindle Collet Style	Max Capacity Ø
BT40	TA06PB40	BT40-TA06P	601E	6 mm
BT50	TA06PB50	BT50-TA06P	601E	6 mm
CT40	TA06PC40	CT40-TA06P	601E	6 mm
CT50	TA06PC50	CT50-TA06P	601E	6 mm
HSK63A	TA06PH63	HSK63-TA06P	601E	6 mm
HSK80A	TA06PH80	HSK80-TA06P	601E	6 mm
HSK100A	TA06PH100	HSK100-TA06P	601E	6 mm
NMTB40	TA06PN40	NMTB40-TA06P	601E	6 mm
NMTB50	TA06PN50	NMTB50-TA06P	601E	6 mm

TA07P - Right Angle Heads

TA07P-BT40, TA07P-BT50
TA07P-CT40, TA07P-CT50

Ø 7 mm	M6	1-1	10000	5-40 7-50

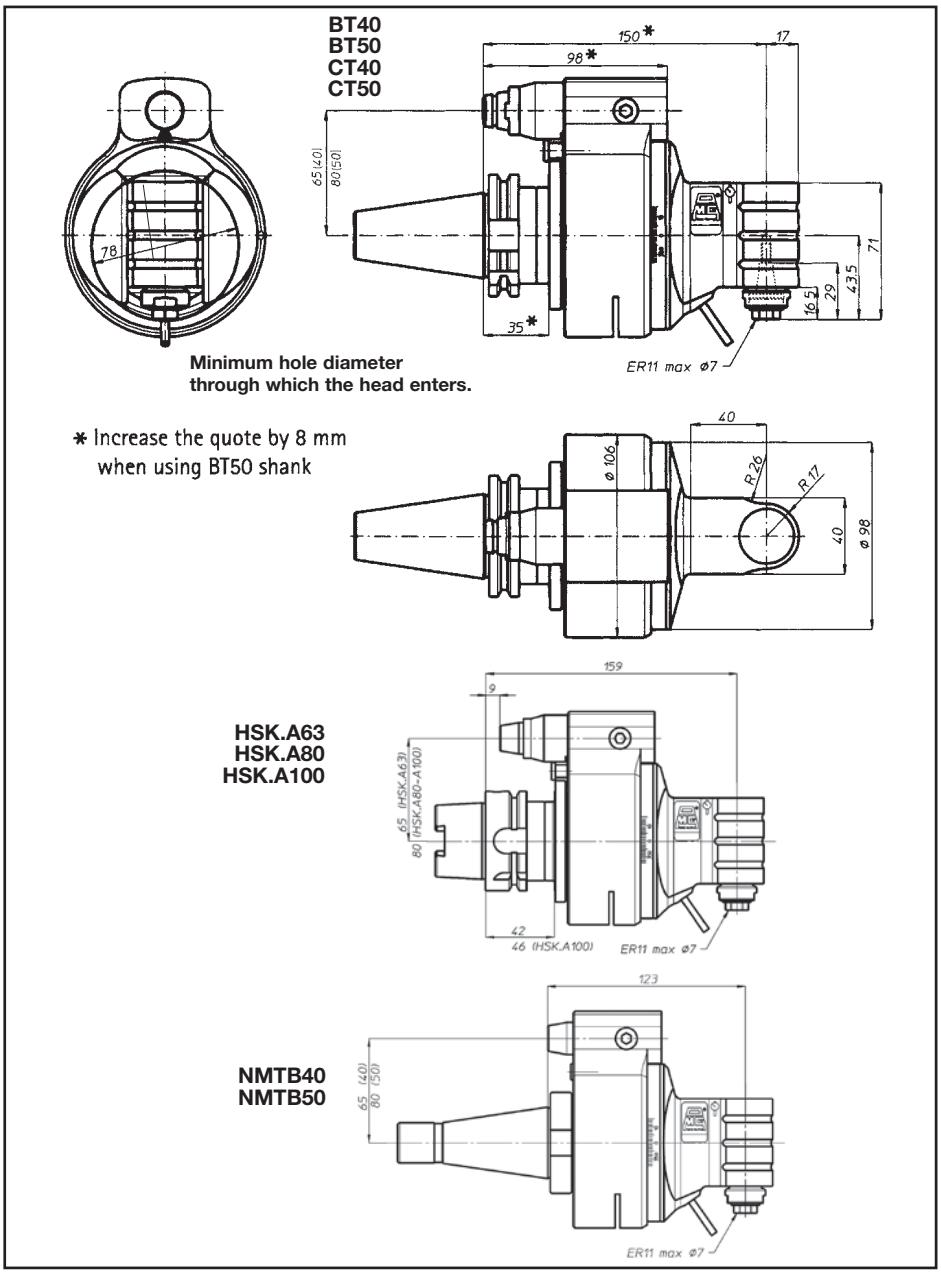

Power

Max. Torque

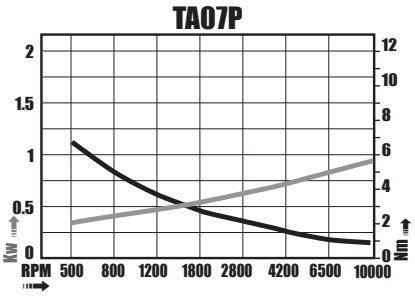

Taper	Order No.	Device Type	Output Spindle Collet Style	Max Capacity Ø
BT40	TA07PB40	BT40 - TA07P	ECX/ER11	7 mm
BT50	TA07PB50	BT50 - TA07P	ECX/ER11	7 mm
CT40	TA07PC40	CT40 - TA07P	ECX/ER11	7 mm
CT50	TA07PC50	CT50 - TA07P	ECX/ER11	7 mm
HSK63A	TA07PH63	H63A - TA07P	ECX/ER11	7 mm
HSK80A	TA07PH80	H80A - TA07P	ECX/ER11	7 mm
HSK100A	TA07PH100	H100A - TA07P	ECX/ER11	7 mm
NMTB40	TA07PN40	NMTB40 - TA07P	ECX/ER11	7 mm
NMTB50	TA07PN50	NMTB50 - TA07P	ECX/ER11	7 mm

TA07P.L-Right Angle Heads

TA07P.L-BT40, TA07P.L-BT50
TA07P.L-CT40, TA07P.L-CT50

Ø7 mm	M6	1-1	10000 Rpm	7.5-40 9.5-50 Kg

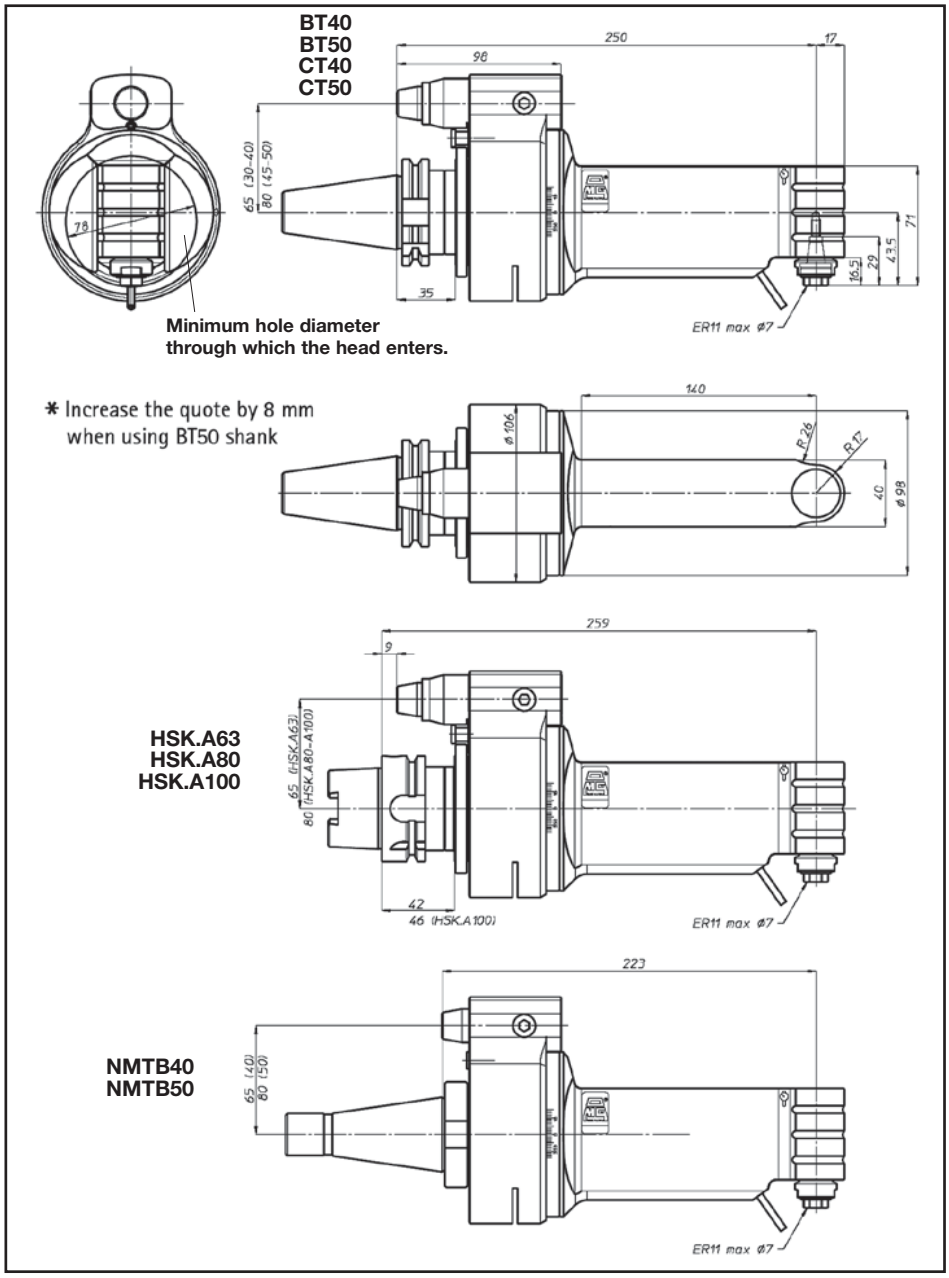

Power

Max. Torque

TA07P.L

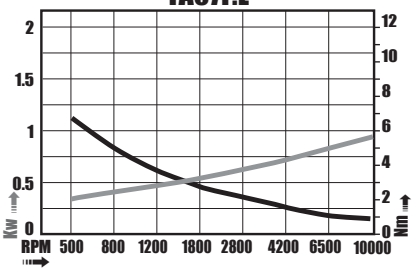

Taper	Order No.	Device Type	Output Spindle Collet Style	Max Capacity Ø
BT40	TA07PLB40	BT40 - TA07PL	ECX/ER11	7 mm
BT50	TA07PLB50	BT50 - TA07PL	ECX/ER11	7 mm
CT40	TA07PLC40	CT40 - TA07PL	ECX/ER11	7 mm
CT50	TA07PLC50	CT50 - TA07PL	ECX/ER11	7 mm
HSK63A	TA07PLH63	H63A - TA07PL	ECX/ER11	7 mm
HSK80A	TA07PLH80	H80A - TA07PL	ECX/ER11	7 mm
HSK100A	TA07PLH100	H100A - TA07PL	ECX/ER11	7 mm
NMTB40	TA07PLN40	NMTB40 - TA07PL	ECX/ER11	7 mm
NMTB50	TA07PLN50	NMTB50 - TA07PL	ECX/ER11	7 mm

TA10P - Right Angle Heads

TA10P-CT40
TA10P-MAS 403-BT40
TA10P-CT50
TA10P-MAS 403-BT50
TA10P - NMTB50

Ø10 mm	M8 5/16”	1-1	10000	5.3-40 7.5-50

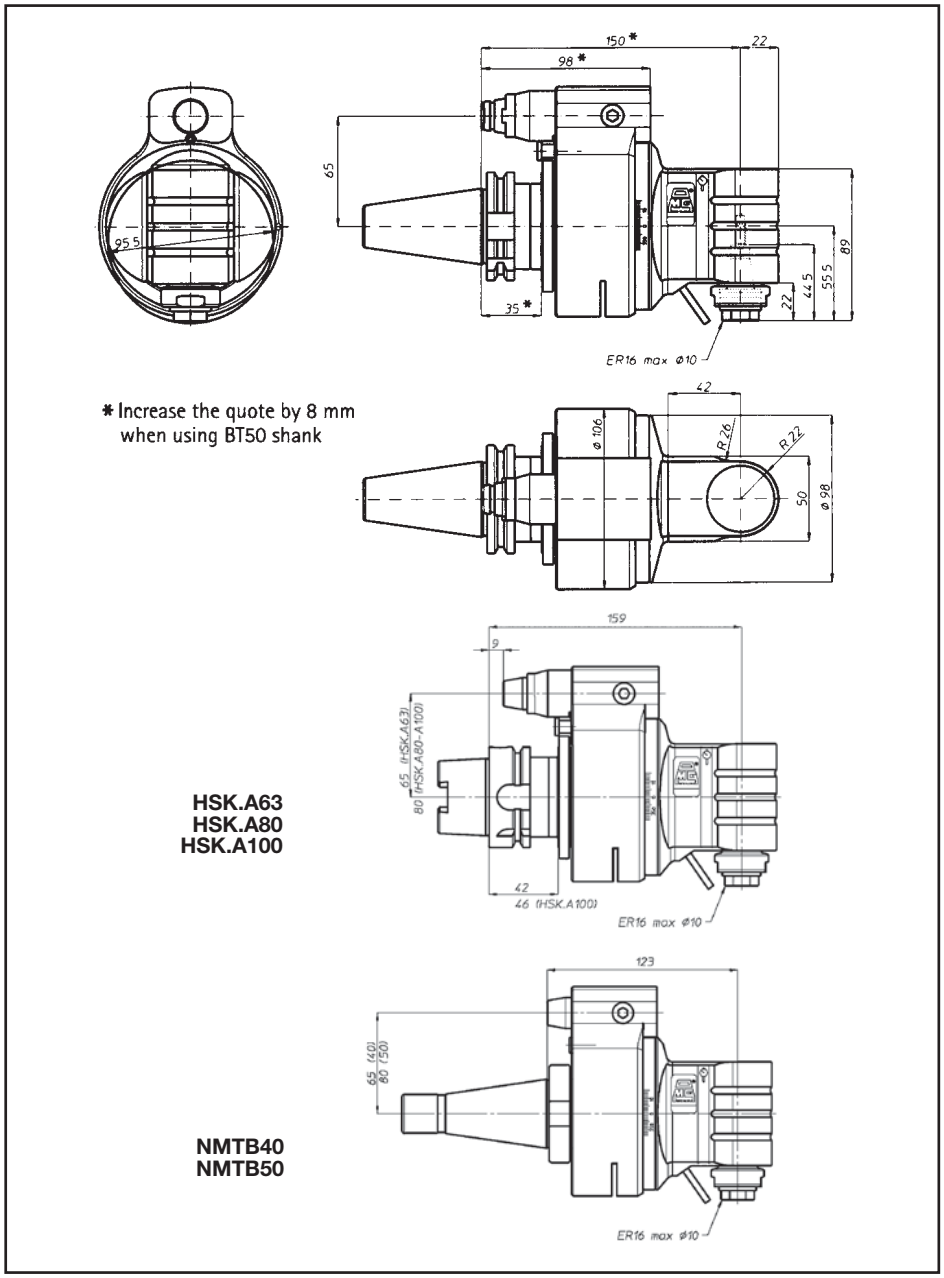

* Increase the quote by 8 mm when using BT50 shank

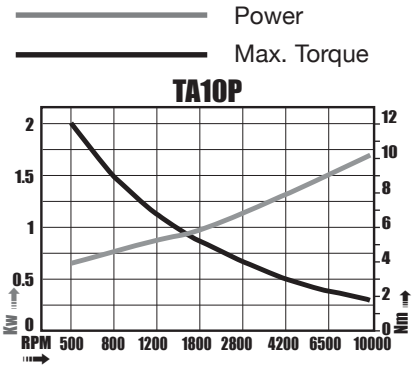

Taper	Order No.	Device Type	Output Spindle Collet Style	Max Capacity Ø
BT40	TA10PB40	BT40 - TA10P	ECX/ER16	10mm (3/8")
BT50	TA10PB50	BT50 - TA10P	ECX/ER16	10mm (3/8")
CT40	TA10PC40	CT40 - TA10P	ECX/ER16	10mm (3/8")
CT50	TA10PC50	CT50 - TA10P	ECX/ER16	10mm (3/8")
HSK63A	TA10PH63	H63A - TA10P	ECX/ER16	10mm (3/8")
HSK80A	TA10PH80	H80A - TA10P	ECX/ER16	10mm (3/8")
HSK100A	TA10PH100	H100A - TA10P	ECX/ER16	10mm (3/8")
NMTB40	TA10PN40	NMTB40 - TA10P	ECX/ER16	10mm (3/8")
NMTB50	TA10PN50	NMTB50 - TA10P	ECX/ER16	10mm (3/8")

TA10P.L-Right Angle Heads

TA10P.L-CT40
TA10P.L-MAS 403-BT40
TA10P.L-CT50
TA10P.L-MAS 403-BT50
TA10P.L - NMTB50

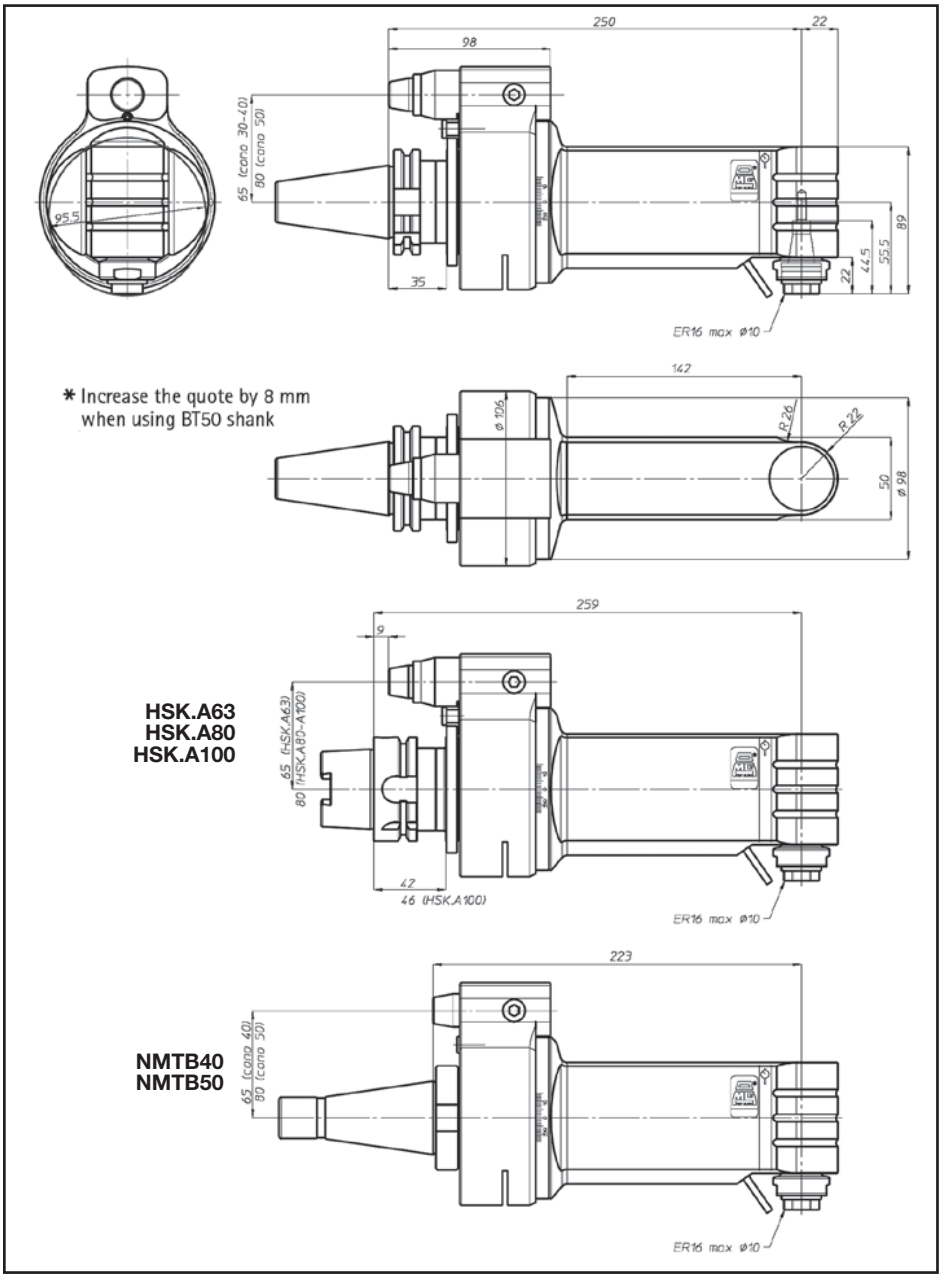

Ø10 mm	M8 5/16"	1-1	10000	8.3-40 10.5-50

Power
Max. Torque

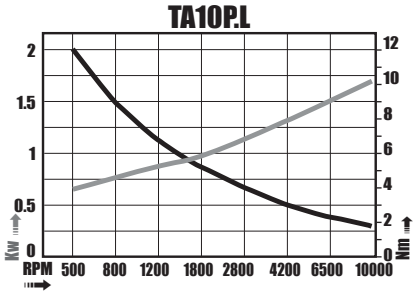

Taper	Order No.	Device Type	Output Spindle Collet Style	Max Capacity Ø
BT40	TA10PLB40	BT40 - TA10PL	ECX/ER16	10mm (3/8")
BT50	TA10PLB50	BT50 - TA10PL	ECX/ER16	10mm (3/8")
CT40	TA10PLC40	CT40 - TA10PL	ECX/ER16	10mm (3/8")
CT50	TA10PLC50	CT50 - TA10PL	ECX/ER16	10mm (3/8")
HSK63A	TA10PLH63	H63A - TA10PL	ECX/ER16	10mm (3/8")
HSK80A	TA10PLH80	H80A - TA10PL	ECX/ER16	10mm (3/8")
HSK100A	TA10PLH100	H100A - TA10PL	ECX/ER16	10mm (3/8")
NMTB40	TA10PLN40	NMTB40 - TA10PL	ECX/ER16	10mm (3/8")
NMTB50	TA10PLN50	NMTB50 - TA10PL	ECX/ER16	10mm (3/8")

TA13P - Right Angle Heads

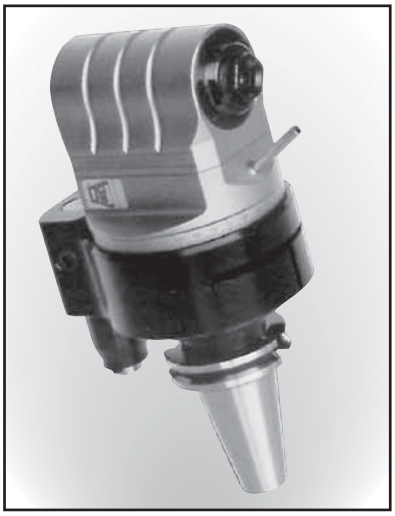

TA13P - CT40
TA13P - MAS 403-BT40
TA13P-HSK-A63
DIN69893
TA13P-HSK-A80
DIN69893
TA13P-HSK-A100
DIN69898
TA13P - CT50
TA13P - MAS 403-BT50
TA13P - NMTB-50

Ø13 mm 1/2"	M10 3/8"	1-1	8000	6.5-40 9 -50

Power
Max. Torque

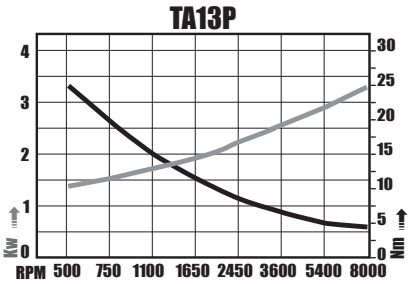

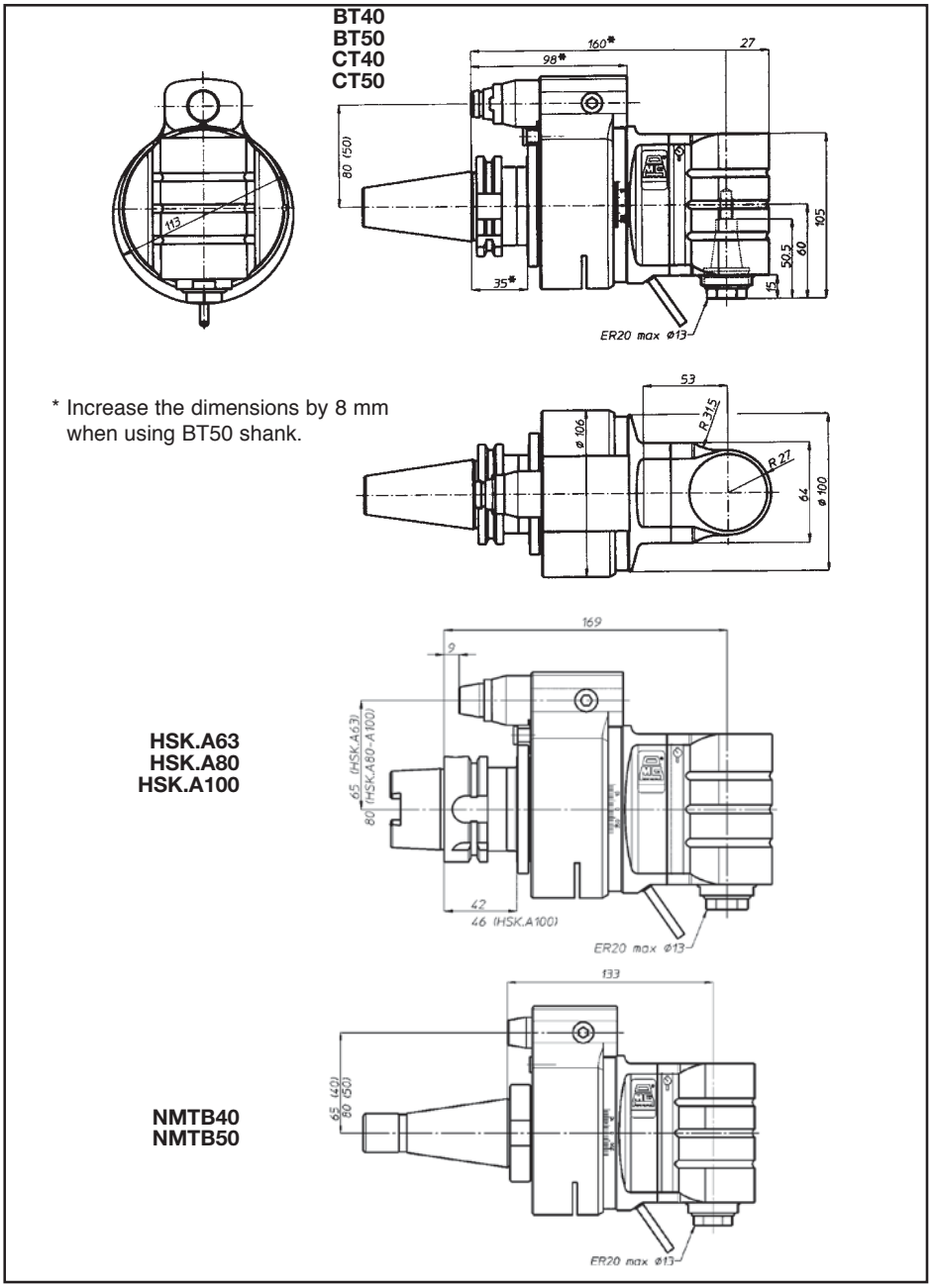

Taper	Order No.	Device Type	Output Spindle Collet Style	Max Capacity Ø
BT40	TA13PB40	BT40 - TA13P	ECX/ER20	13mm (1/2")
BT50	TA13PB50	BT50 - TA13P	ECX/ER20	13mm (1/2")
CT40	TA13PC40	CT40 - TA13P	ECX/ER20	13mm (1/2")
CT50	TA13PC50	CT50 - TA13P	ECX/ER20	13mm (1/2")
HSK63A	TA13H63	HSK63A-TA13P	ECX/ER20	13mm (1/2")
HSK80A	TA13H80	HSK80A-TA13P	ECX/ER20	13mm (1/2")
HSK100A	TA13PH100	HSK100A-TA13P	ECX/ER20	13mm (1/2")
NMTB40	TA13PN40	NMTB40 - TA13P	ECX/ER20	13mm (1/2")
NMTB50	TA13PN50	NMTB50 - TA13P	ECX/ER20	13mm (1/2")

TA16P - Right Angle Heads

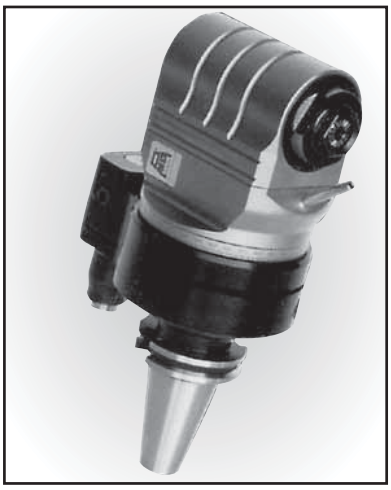

TA16P - CT40
TA16P - MAS 403-BT40
TA16P - CT50
TA16P - MAS 403-BT50
TA16P-HSK-A63
DIN69893
TA16P-HSK-A80
DIN69893
TA16P - NMTB-50

Ø16 mm 5/8”	M12 1/2”	1-1	5000	7.7-40 11.7-50

BT40
BT50
CT40
CT50

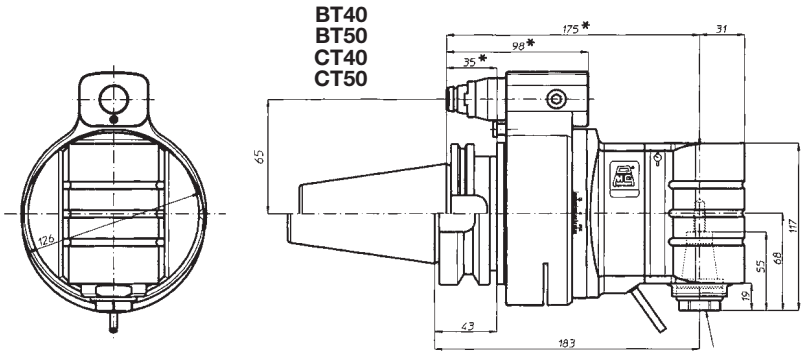

* Increase the dimensions by 8 mm when using BT50 shank.

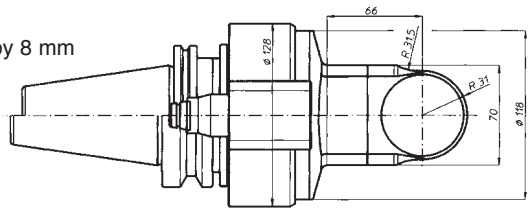

HSK.A63
HSK.A80
HSK.A100

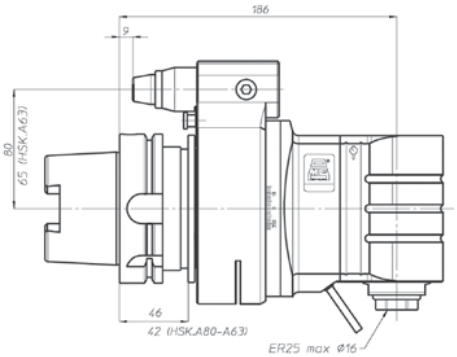

NMTB40
NMTB50

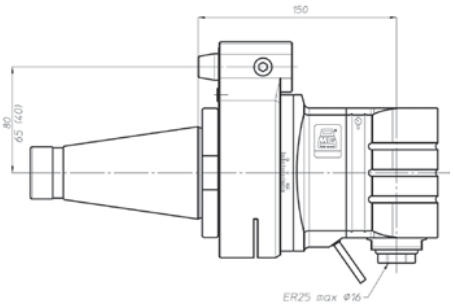

Power
Max. Torque

TA16P

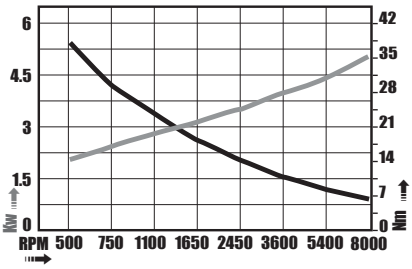

Taper	Order No.	Device Type	Output Spindle Collet Style	Max Capacity Ø
BT40	TA16PB40	BT40 - TA9016P	ECX/ER25	16mm (5/8")
BT50	TA16PB50	BT50 - TA9016P	ECX/ER25	16mm (5/8")
CT40	TA16PC40	CT40 - TA9016P	ECX/ER25	16mm (5/8")
CT50	TA16PC50	CT50 - TA9016P	ECX/ER25	16mm (5/8")
HSK63A	TA16PH63	HSK63A-TA16P	ECX/ER25	16mm (5/8")
HSK80A	TA16PH80	HSK80A-TA16P	ECX/ER25	16mm (5/8")
HSK100A	TA16PH100	HSK100A-TA16P	ECX/ER25	16mm (5/8")
NMTB40	TA16PN40	NMTB40 - TA9016P	ECX/ER25	16mm (5/8")
NMTB50	TA16PN50	NMTB50 - TA9016P	ECX/ER25	16mm (5/8")

TA20P - Right Angle Heads

TA20P - CT50
TA20P - MAS 403-BT50
TA20P-HSK-A80
DIN69893
TA20P-HSK-A100
DIN69893
TA20P- NMTB-50

Ø20 mm	M14	1-1	3500	14

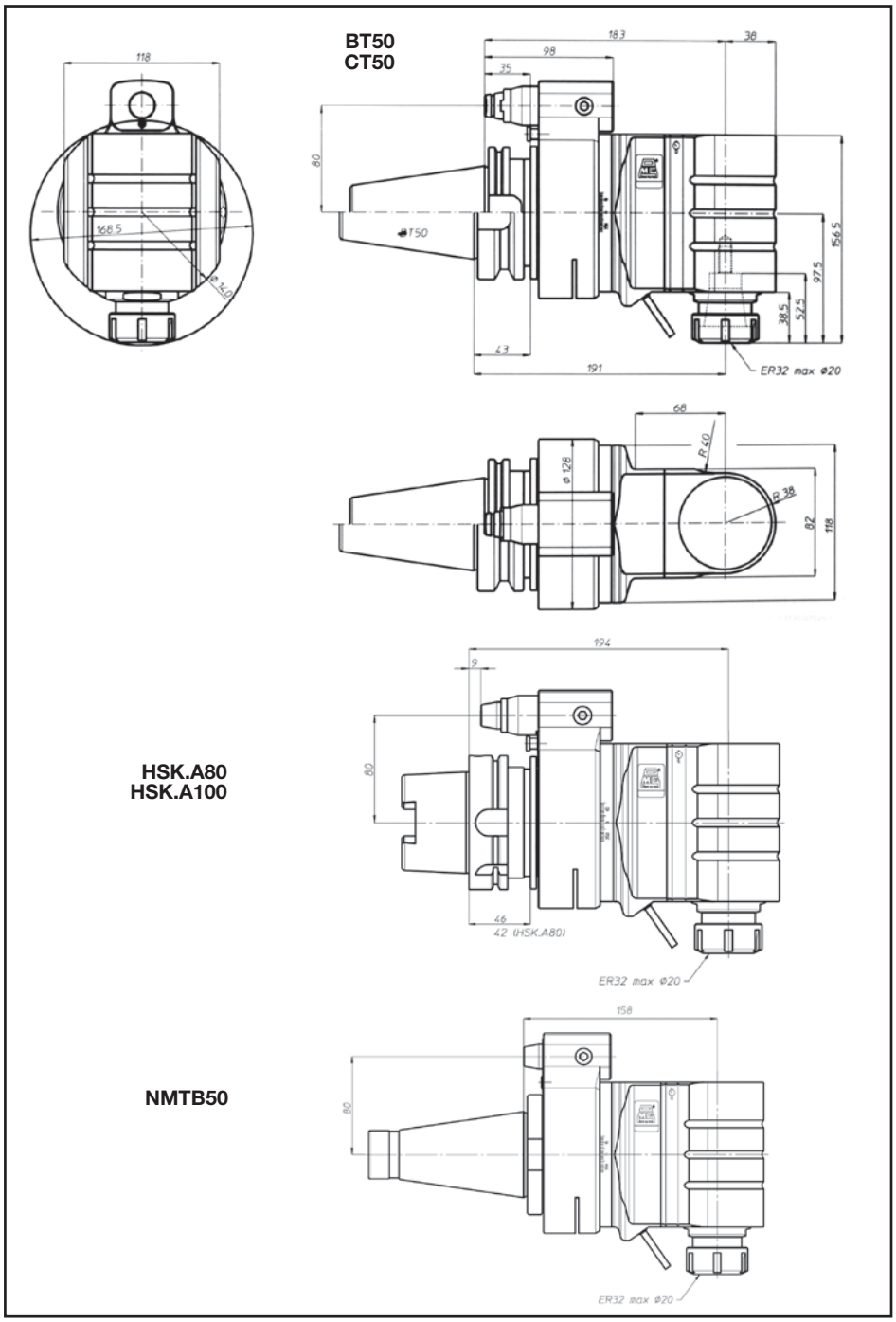

Power
Max. Torque

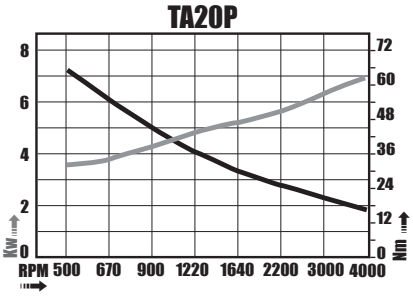

Taper	Order No.	Device Type	Output Spindle Collet Style	Max. Capacity
BT50	TA20PB50	BT50 - TA20P	ECX/ER32	20mm (3/4")
CT50	TA20PC50	CT50 - TA20P	ECX/ER32	20mm (3/4")
HSK-80A	TA20PH80	HSK-80A-TA20P	ECX/ER32	20 mm (3/4”)
HSK-100A	TA20PH100	HSK-100A-TA20P	ECX/ER32	20 mm (3/4”)
NMTB50	TA20PN50	NMTB50 - TA20P	ECX/ER32	20mm (3/4")

TA20.30P - Right Angle Heads

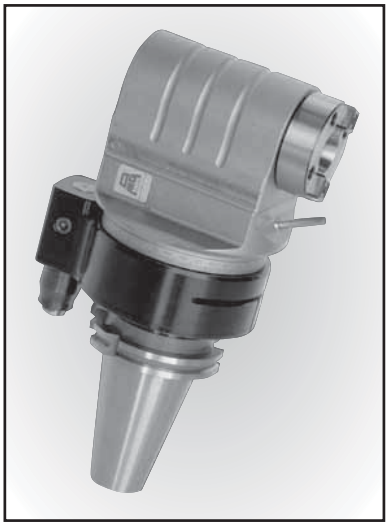

TA20.30 - CT50
TA20.30 - MAS 403-BT50
TA20.30 - NMTB-50

Ø20 mm	M14 5/8”	1-1	3500 Rpm	14 Kg

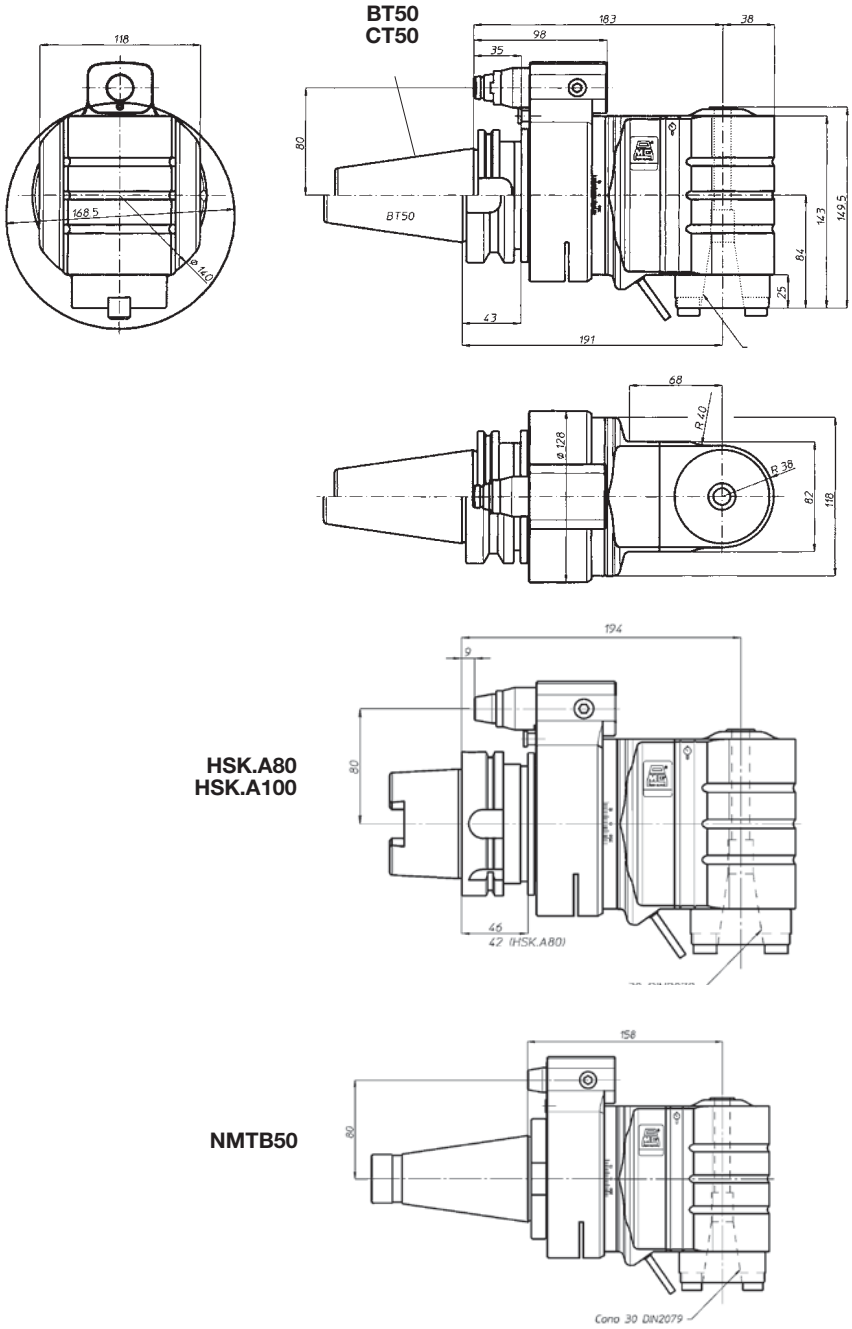

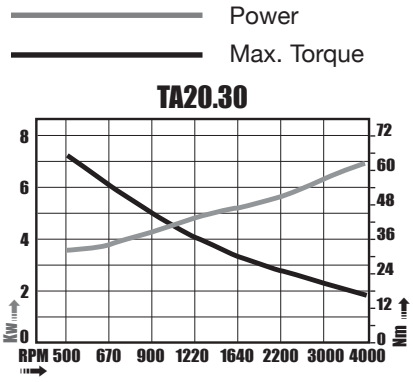

Taper	Order No.	Device Type	Output Spindle Taper
BT50	TA2030B50	BT50 - TA20-30	NMTB30QC
CT50	TA2030C50	CT50 - TA20-30	NMTB30QC
HSK80A	TA203H80	HSK80A - TA20-30	NMTB30QC
HSK100A	TA203H100	HSK100A - TA20-30	NMTB30QC
NMTB50	TA2030N50	NMTB50 - TA20-30	NMTB30QC

TA26P - Right Angle Heads

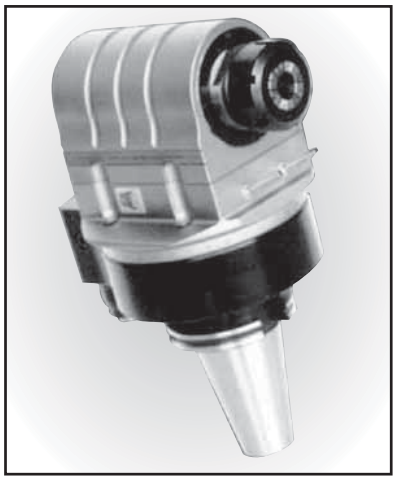

TA26P - CT50
TA26P - MAS 403-BT50
TA26P-HSK-A100
DIN69893
TA26P - NMTB-50

Ø24mm 1"	M20 3/4"	1-1	2500	21

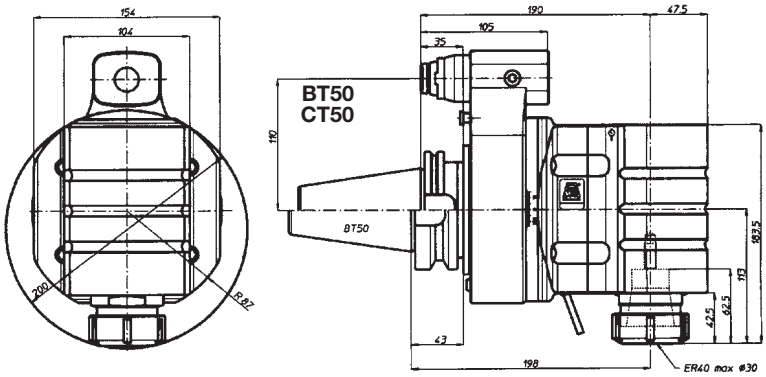

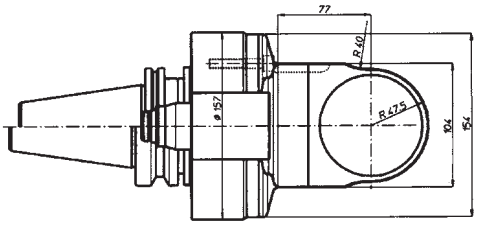

HSK.A100

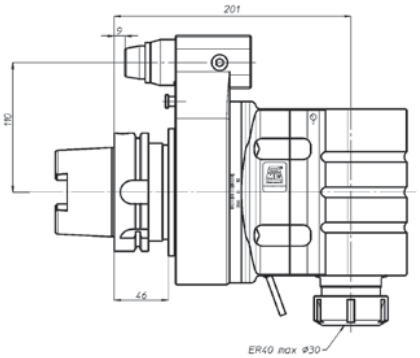

NMTB50

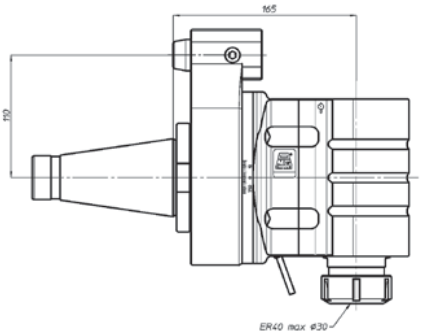

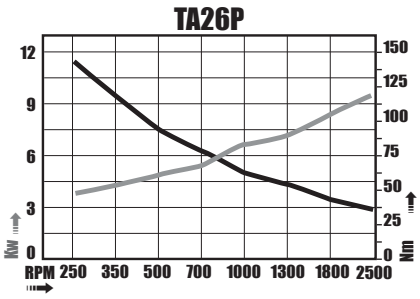

Taper	Order No.	Device Type	Output Spindle Collet Style	Max. Capacity
BT50	TA26PB50	BT50 - TA26P	ECX/ER40	26 mm (1") Ø
CT50	TA26PC50	CT50 - TA26P	ECX/ER40	26 mm (1") Ø
HSK100A	TA26PH100	HSK100A-TA26P	ECX/ER40	26 mm (1") Ø
NMTB50	TA26PN50	NMTB50 - TA26P	ECX/ER40	26 mm (1") Ø

TA26.40P - Right Angle Heads

TA26.40 - CT50
TA26.40 - MAS 403-BT50
TA26.40 - NMTB-50

Ø26mm 1”	M20 3/4”	1-1	2500	22

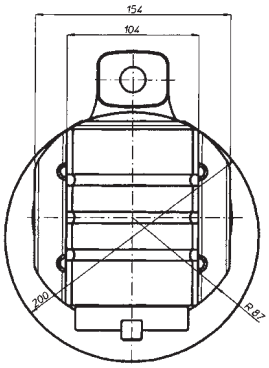

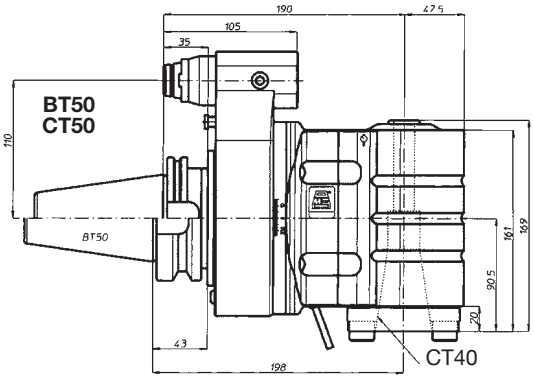

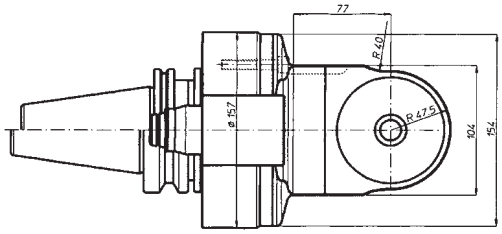

HSK.A100

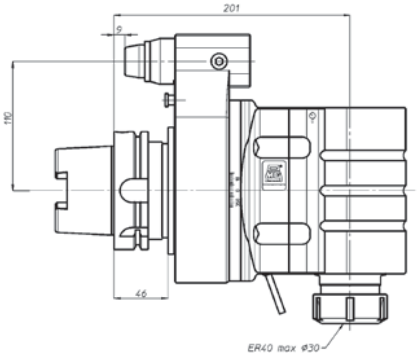

NMTB50

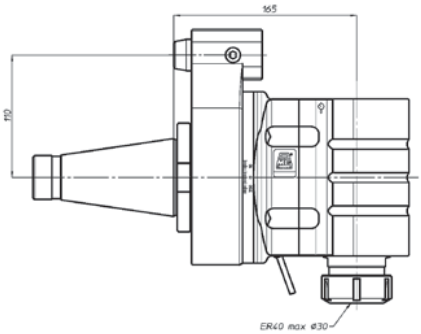

Power
Max. Torque

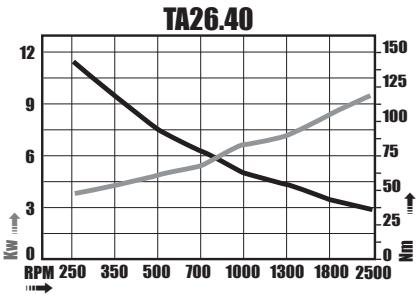

Taper	Order No.	Device Type	Output Spindle Taper
BT50	TA2640B50	BT50 - TA26-40	CT40
CT50	TA2640C50	CT50 - TA26-40	CT40
HSK100A	TA2640H100	HSK100A-TA26-40	CT40
NMTB50	TA2640N50	NMTB50 - TA26-40	CT40

TAV10.P- Universal Angle Heads

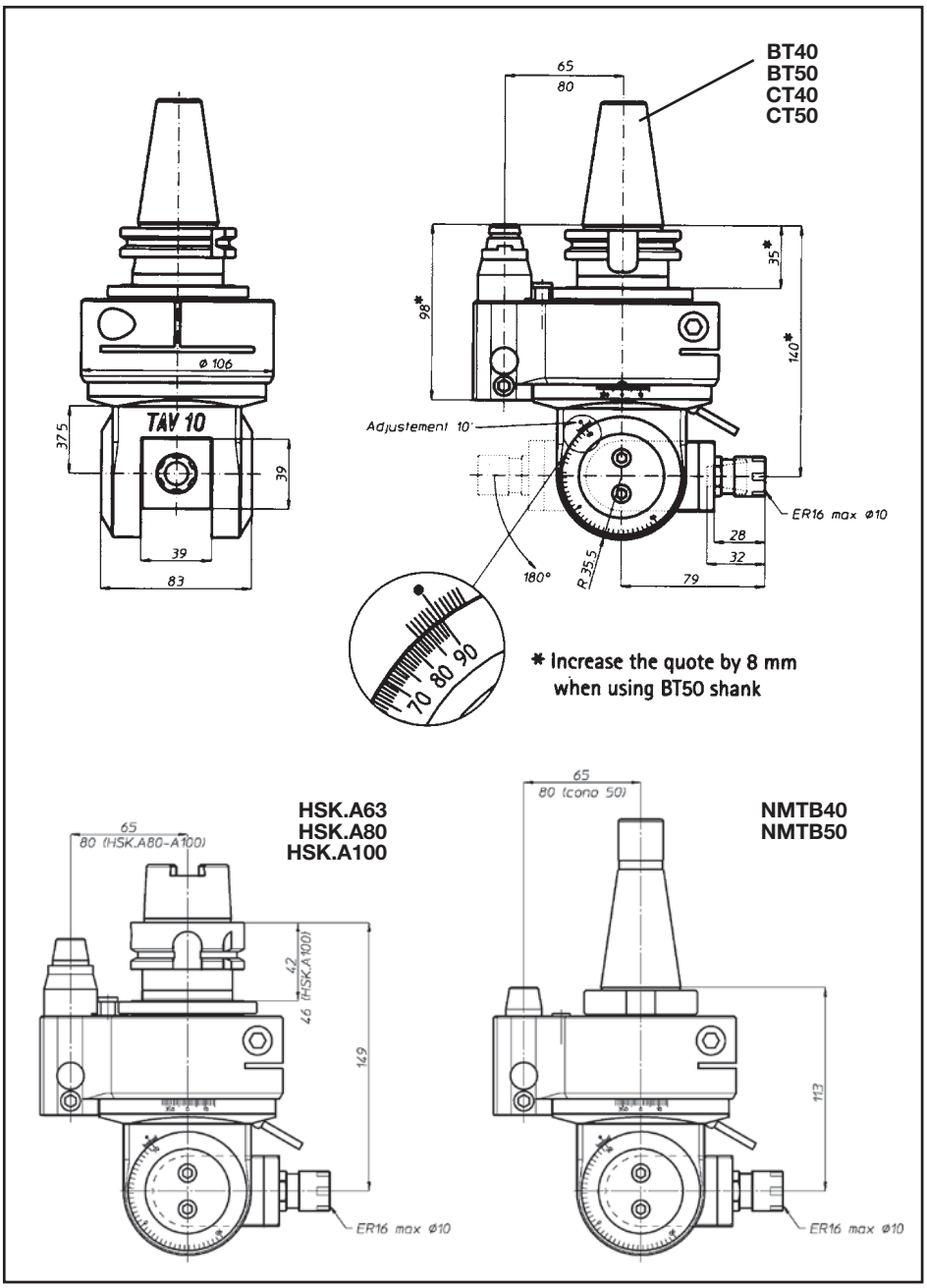

TAV10.P - CT40/CT50
TAV10.P - MAS403-BT40/BT50
TAV10.P-HSK-A63
DIN69893

TAV10.P-HSK-A80
DIN69893

TAV10.P-HSK-A100
DIN69893

			Rpm	Kg
Ø10mm 3/8"	M8 5/16"	1-1	4000	6.4-40 8.5-50

Power
Max. Torque

TAV10P

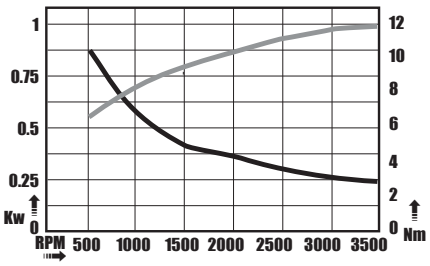

Taper	Order No.	Device Type	Output Spindle Collet Style	Max. Capacity
BT40	TAV10PB40	BT40 - TAV10P	ER/ECX16	10mm (3/8")
BT50	TAV10PB50	BT50 - TAV10P	ER/ECX16	10mm (3/8")
CT40	TAV10PC40	CT40 - TAV10P	ER/ECX16	10mm (3/8")
CT50	TAV10PC50	CT50 - TAV10P	ER/ECX16	10mm (3/8")
HSK63A	TAV10PH63	HSK63A-TAV10P	ER/ECX16	10mm (3/8")
HSK80A	TAV10PH80	HSK80A-TAV10P	ER/ECX16	10mm (3/8")
HSK100A	TAV10PH100	HSK100A-TAV10P	ER/ECX16	10mm (3/8")
NMTB40	TAV10PN40	NMTB40-TAV10P	ER/ECX16	10mm (3/8")
NMTB50	TAV10PN50	NMTB50-TAV10P	ER/ECX16	10mm (3/8")

TAV13.P- Universal Angle Heads

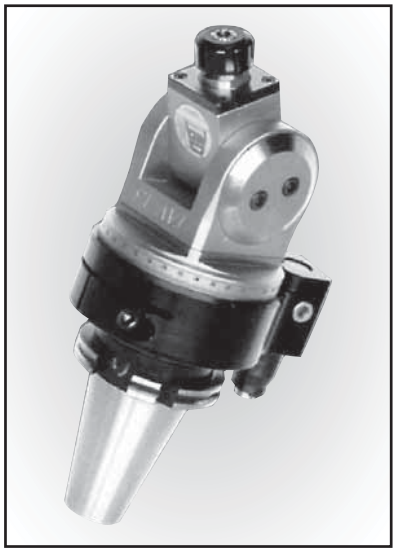

TAV13.P - CT40/CT50
TAV13.P - MAS 403-BT40/BT50
TAV13.P-HSK-A63
DIN69893
TAV13.P-HSK-A80
DIN69893
TAV13.P-HSK-A100
DIN69893
TAV13.P - NMTB-50

Ø13mm 1/2"	M10 3/8"	1-1	3000	7.8-40 10.5-50

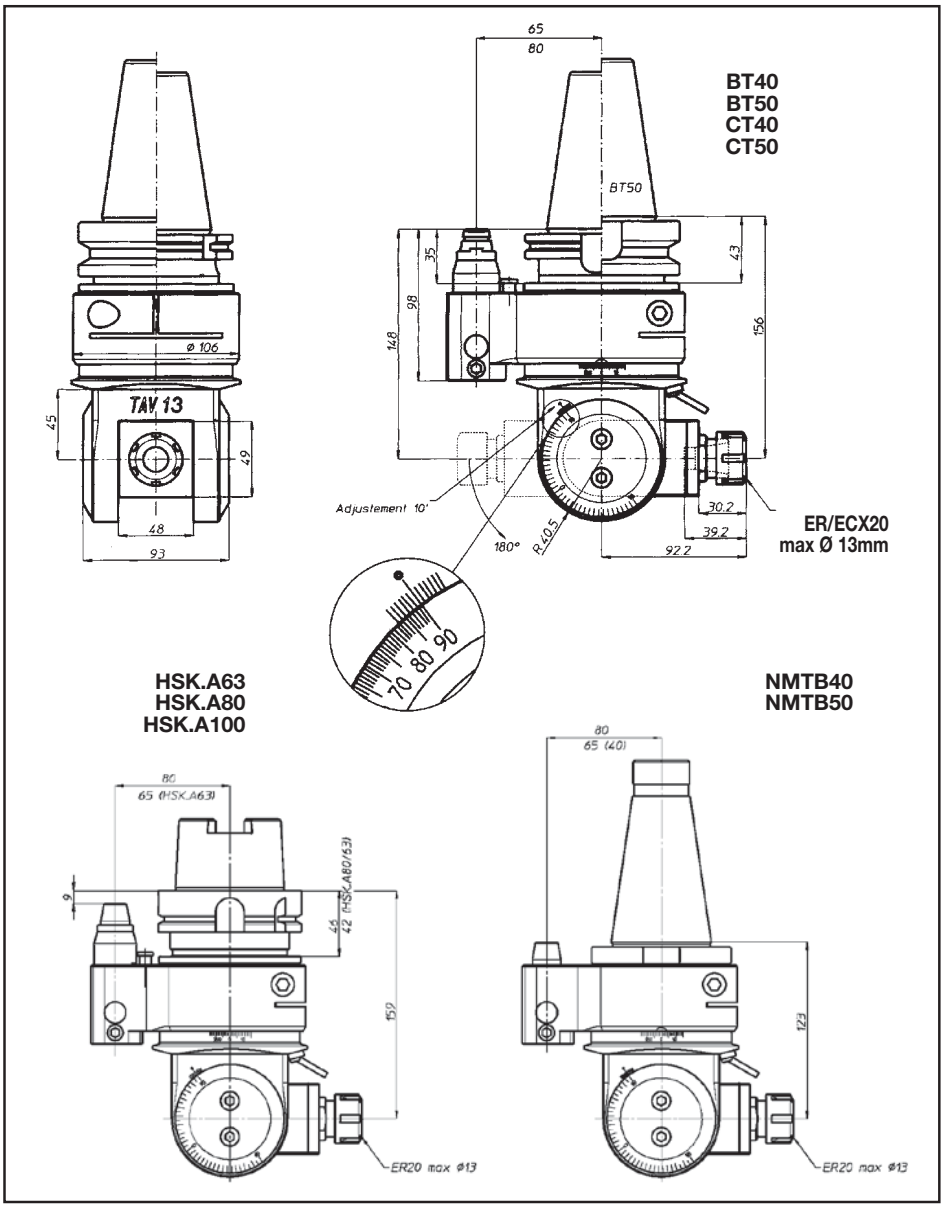

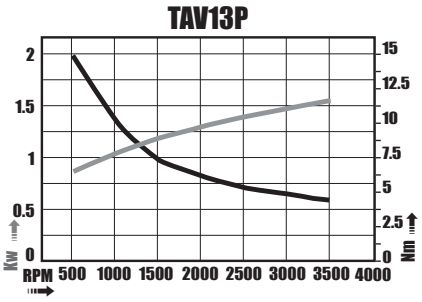

Taper	Order No.	Device Type	Output Spindle Collet Style	Max. Capacity Ø
BT40	TAV13PB40	BT40 - TAV13P	ER/ECX20	13mm (1/2")
BT50	TAV13PB50	BT50 - TAV13P	ER/ECX20	13mm (1/2")
CT40	TAV13PC40	CT40 - TAV13P	ER/ECX20	13mm (1/2")
CT50	TAV13PC50	CT50 - TAV13P	ER/ECX20	13mm (1/2")
HSK63A	TAV13PH63	HSK63A-TAV13P	ER/ECX20	13mm (1/2")
HSK80A	TAV13PH80	HSK80A-TAV13P	ER/ECX20	13mm (1/2")
HSK100A	TAV13PH100	HSK100A-TAV13P	ER/ECX20	13mm (1/2")
NMTB40	TAV13PN40	NMTB40 - TAV13P	ER/ECX20	13mm (1/2")
NMTB50	TAV13PN50	NMTB50 - TAV13P	ER/ECX20	13mm (1/2")

TAV20.P- Universal Angle Heads

TAV20.P - CT50
TAV20.P - MAS 403 - BT50
TAV20.P - NMTB-50

Ø20mm 3/4"	M16 5/8"	1-1	2500	18.5 50

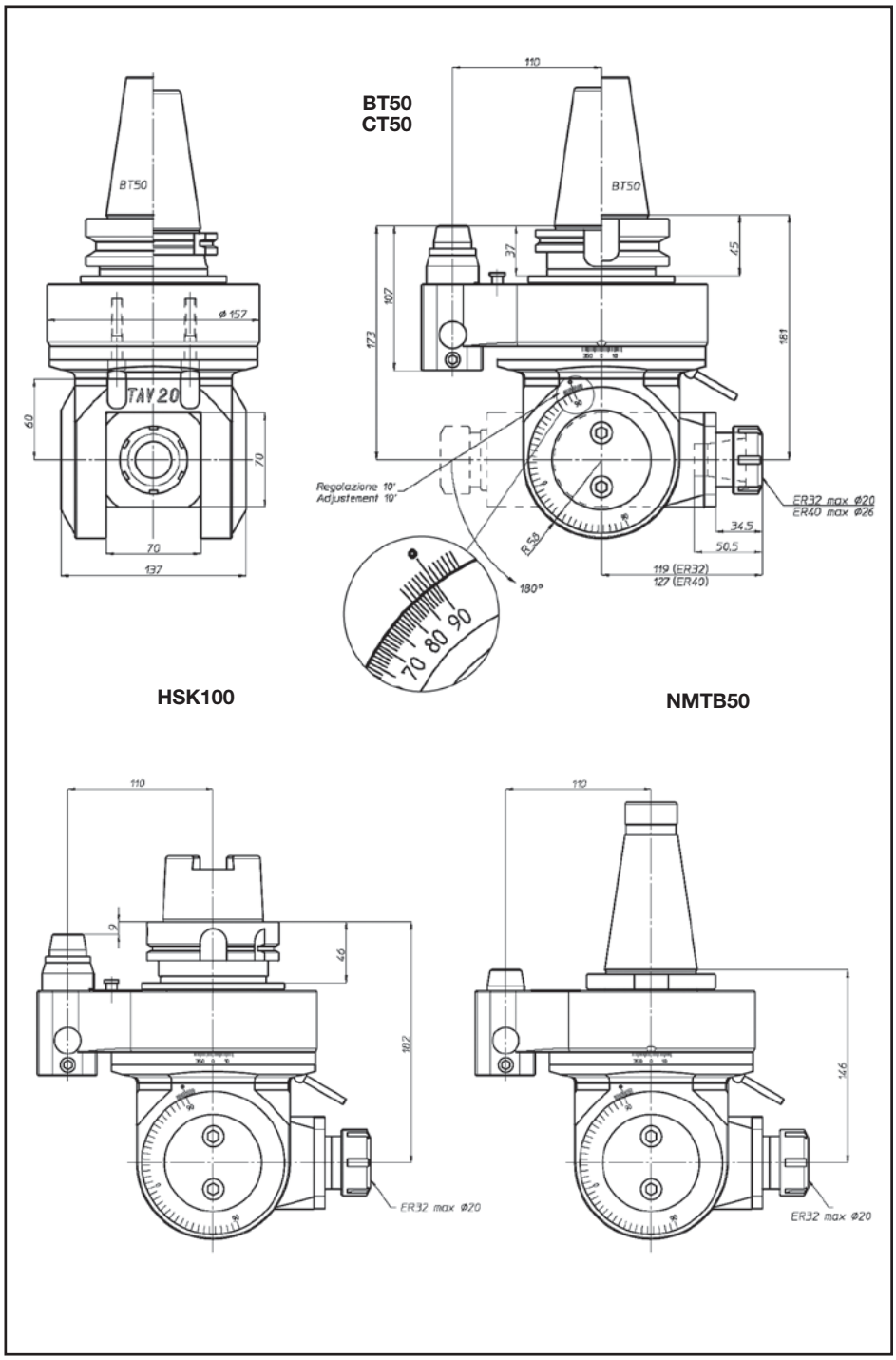

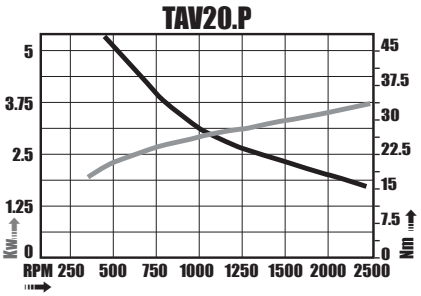

Taper	Order No.	Device Type	Output Spindle Collet Style	Max. Capacity Ø
BT50	TAV20PB50	BT50 - TAV20P	ECX/ER32	20mm (3/4")
CT50	TAV20PC50	CT50 - TAV20P	ECX/ER32	20mm (3/4")
HSK100A	TAV20PH100	HSK100A - TAV20P	ECX/ER32	20mm (3/4")
MTB50	TAV20PN50	NMTB50 - TAV20P	ECX/ER32	20mm (3/4")

TAV50.T- Universal Angle Heads

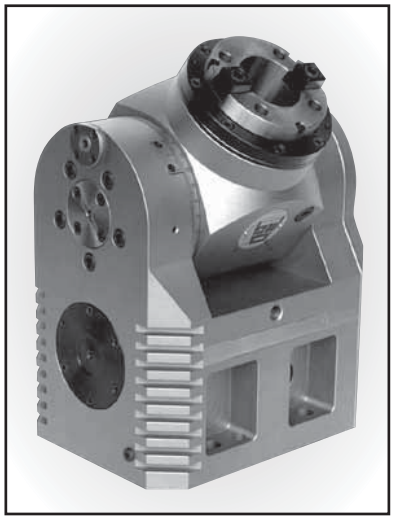

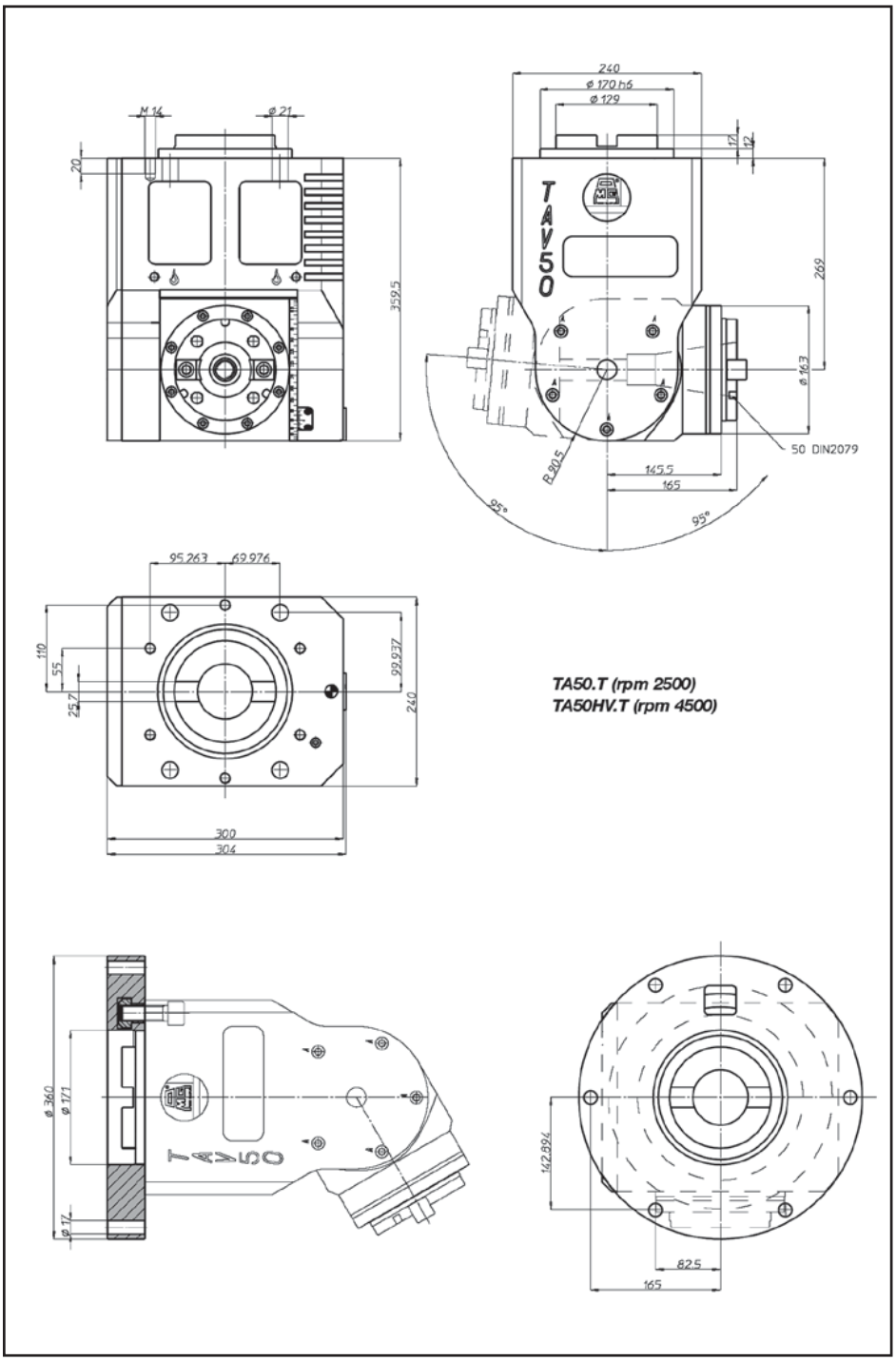

TAV50.T - CT50
TAV50.T- MAS 403 - BT50
TAV50.T - NMTB-50

			Rpm	Kg
Ø45 mm	M36	1-1 1-2	2500 4500	145

Power

Max. Torque

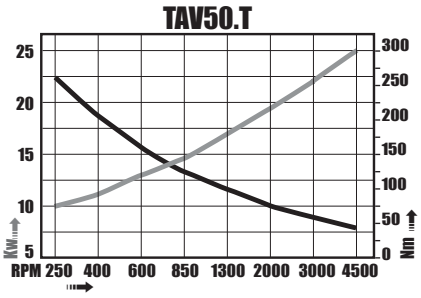

Taper	Order No.	Device Type	Output Spindle Taper
50	TA50T	TA50T	CT50
50	TA50HVT	TA50HVT	CT50

TA07.PD Right Angle Heads

With Coolant Through Output Spindle

Ø7 1/4”	M6 1/4”	1-1	10000	5-40 7-50	10 bar

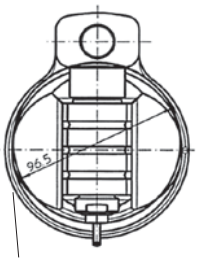

Minimum hole diameter through which the head enters.

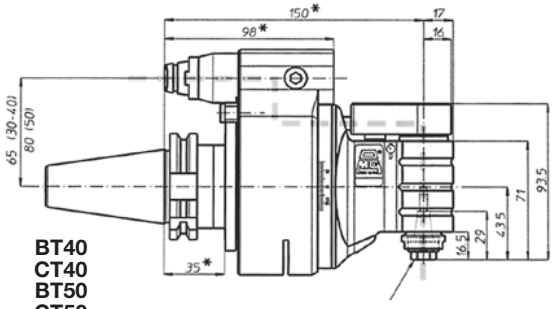

BT40
CT40
BT50
CT50

ECX11 max. Ø7

* Increase the dimensions by 8 mm when using BT50 shank.

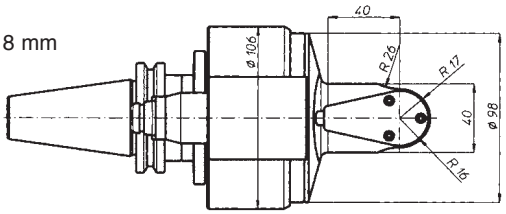

HSK.A63
HSK.A80
HSK.A100

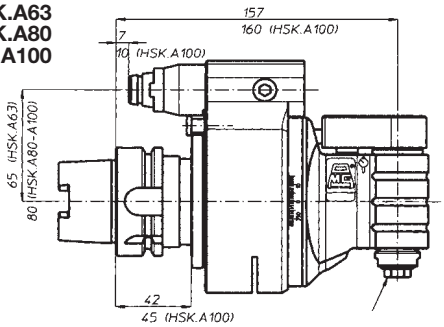

ECX11 max. Ø7

NMTB40
NMTB50

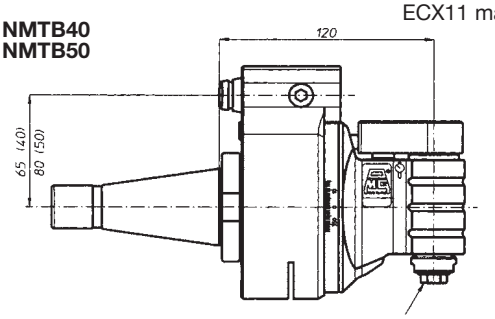

ECX11 max. Ø7

Power
Max. Torque

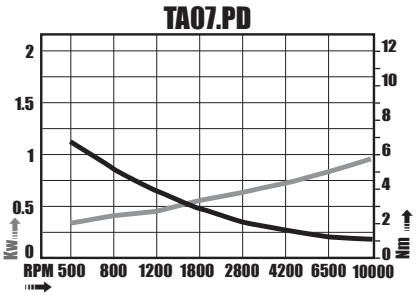

Taper	Order No.	Device Type	Output Spindle Collet Style	Max. Capacity Ø
BT40	TA07PDB40	BT40-TA07PD	ECX/ER11	7 mm
BT50	TA07PDB50	BT50-TA07PD	ECX/ER11	7 mm
CT40	TA07PDC40	CT40-TA07PD	ECX/ER11	7 mm
CT50	TA07PDC50	CT50-TA07PD	ECX/ER11	7 mm
HSKA63A	TA07PH63	HSK63A-TA07PD	ECX/ER11	7 mm
HSKA80A	TA07PH80	HSK80A-TA07PD	ECX/ER11	7 mm
HSKA100A	TA07PH100	HSK100A-TA07PD	ECX/ER11	7 mm
NMTB40	TA07PN40	NMTB40-TA07PD	ECX/ER11	7 mm
NMTB50	TA07PN50	NMTB50-TA07PD	ECX/ER11	7 mm

TA10.PD Right Angle Heads

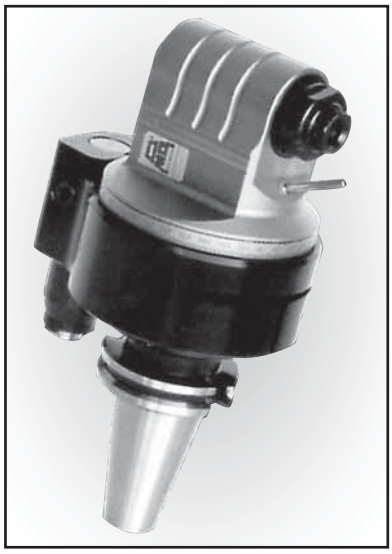

With Coolant Through Output Spindle

Ø10 3/8”	M8 5/16”	1-1	10000 Rpm	5.5-40 7.5-50 Kg	10 bar

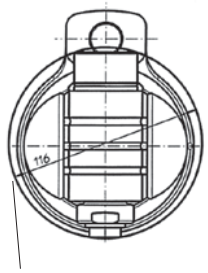

Minimum hole diameter through which the head enters.

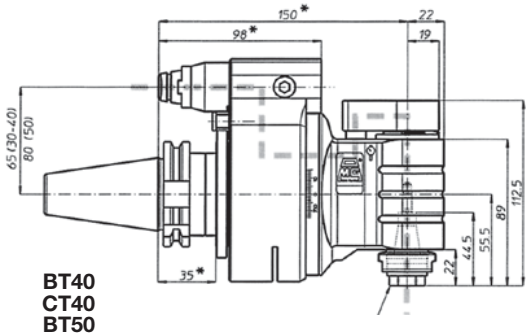

BT40
CT40
BT50
CT50

ECX16 max. Ø10

* Increase the dimensions by 8 mm when using BT50 shank.

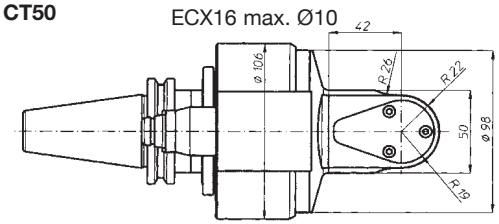

HSK.A63
HSK.A80
HSK.A100

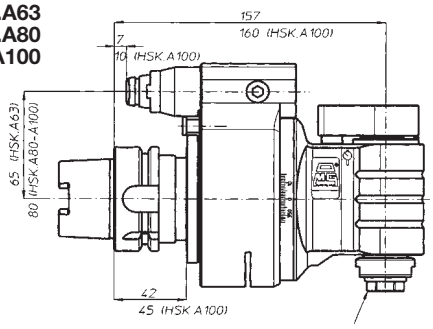

NMTB40
NMTB50

ECX16 max. Ø10

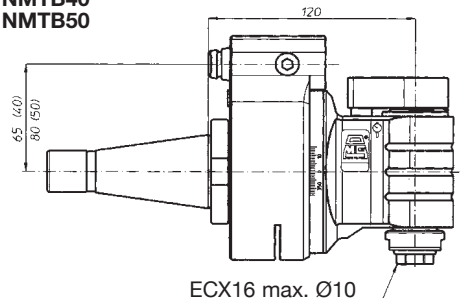

ECX16 max. Ø10

Power

Max. Torque

TA10PD

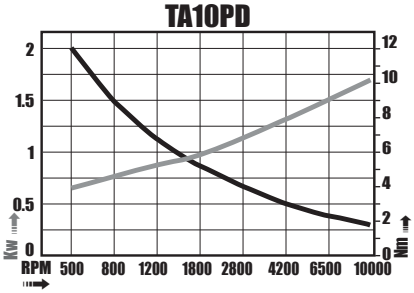

Taper	Order No.	Device Type	Output Spindle Collet Style	Max. Capacity Ø
BT40	TA10PDB40	BT40-TA10PD	ECX/ER16	10mm (3/8”)
BT50	TA10PDB50	BT50-TA10PD	ECX/ER16	10mm (3/8”)
CT40	TA10PDC40	CT40-TA10PD	ECX/ER16	10mm (3/8”)
CT50	TA10PDC50	CT50-TA10PD	ECX/ER16	10mm (3/8”)
HSK63A	TA10PDH63	HSK63A-TA10PD	ECX/ER16	10mm (3/8”)
HSK80A	TA10PDH80	HSK80A-TA10PD	ECX/ER16	10mm (3/8”)
HSK80A	TA10PDH80	HSK80A-TA10PD	ECX/ER16	10mm (3/8”)
HSK100A	TA10PDH100	HSK100A-TA10PD	ECX/ER16	10mm (3/8”)
NMTB40	TA10PDN40	NMTB40-TA10PD	ECX/ER16	10mm (3/8”)
NMTB50	TA10PDN50	NMTB50-TA10PD	ECX/ER16	10mm (3/8”)

TA13.PD Right Angle Heads

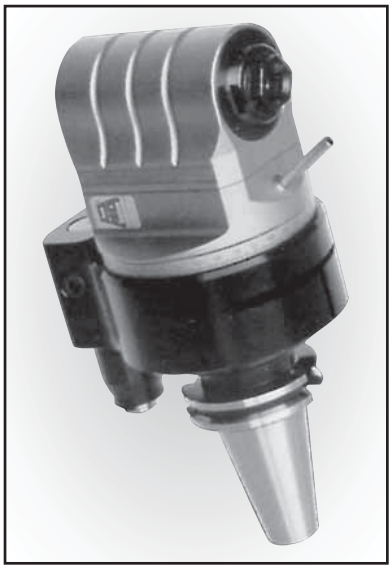

With Coolant Through Output Spindle

Ø10 1/2"	M10 3/8"	1-1	8000	6.5-40 7.5-50	10 bar

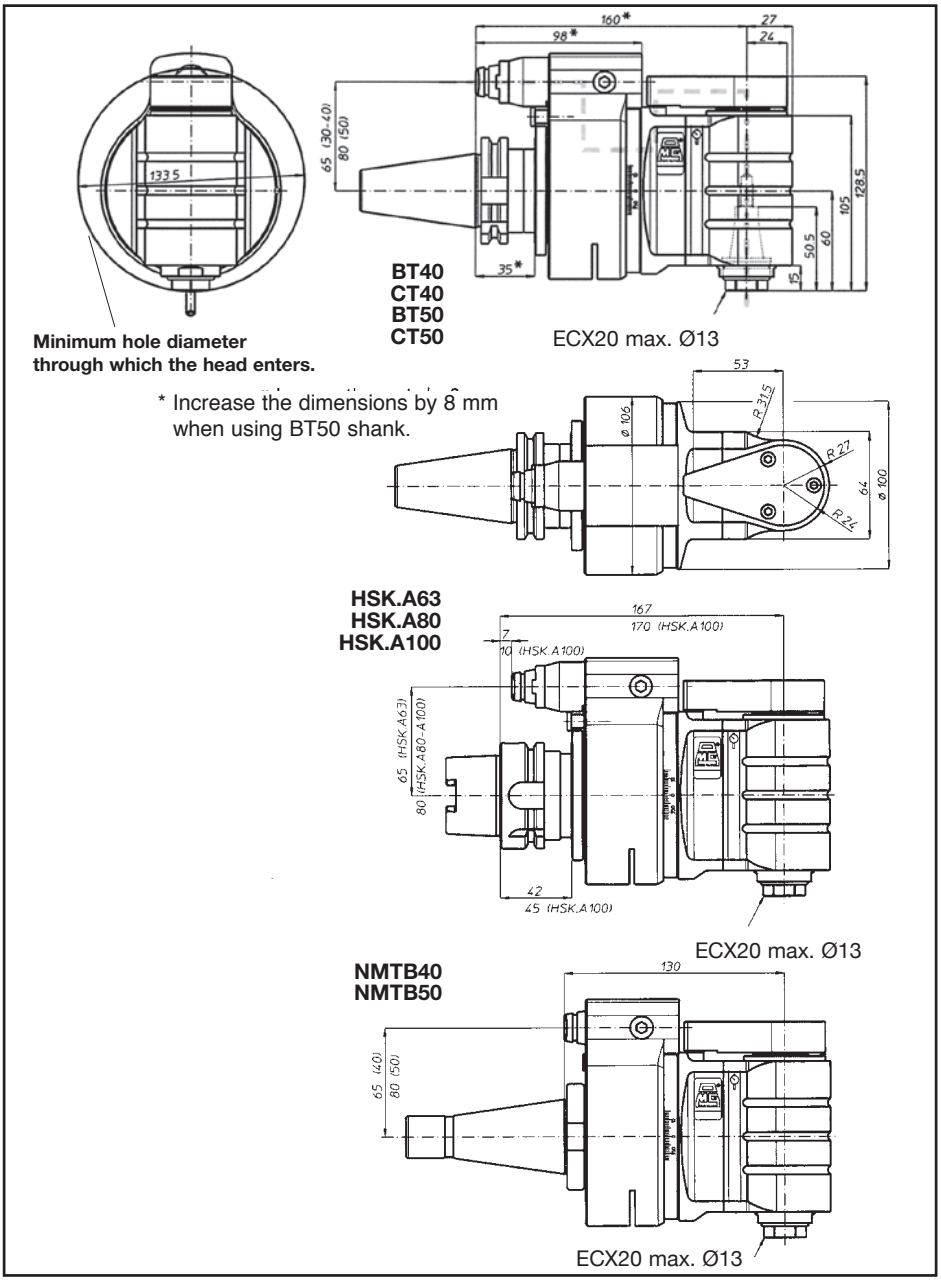

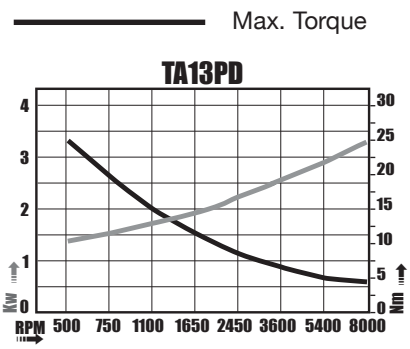

Taper	Order No.	Device Type	Output Spindle Collet Style	Max. Capacity Ø
BT40	TA13PDB40	BT40-TA13PD	ECX/ER16	13mm (1/2")
BT50	TA13PDB50	BT50-TA13PD	ECX/ER16	13mm (1/2")
CT40	TA13PDC40	CT40-TA13PD	ECX/ER16	13mm (1/2")
CT50	TA13PDC50	CT50-TA13PD	ECX/ER16	13mm (1/2")
HSK63A	TA13PDH63	HSK63A-TA13PD	ECX/ER16	13mm (1/2")
HSK80A	TA13PDH80	HSK80A-TA13PD	ECX/ER16	13mm (1/2")
HSK100A	TA13PDH100	HSK100A-TA13PD	ECX/ER16	13mm (1/2")
NMTB40	TA13PDN40	NMTB40-TA13PD	ECX/ER16	13mm (1/2")
NMTB50	TA13PDN50	NMTB50-TA13PD	ECX/ER16	13mm (1/2")

TA16.PD Right Angle Heads

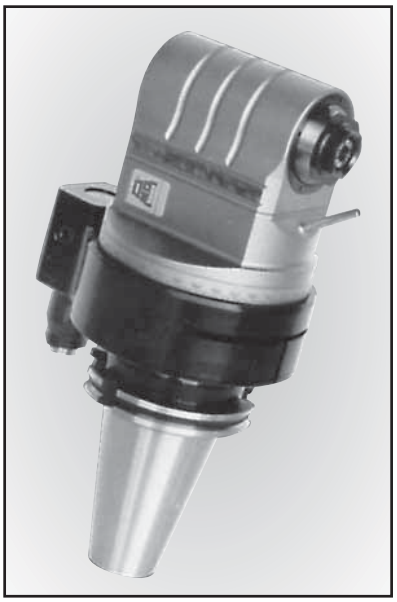

With Coolant Through Output Spindle

			Rpm	Kg	
Ø16	M12	1-1	6000	7.7-40 11.2-50	8 bar

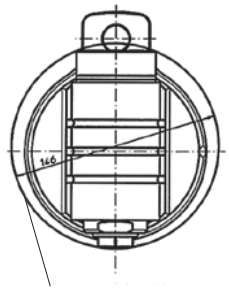

Minimum hole diameter through which the head enters.

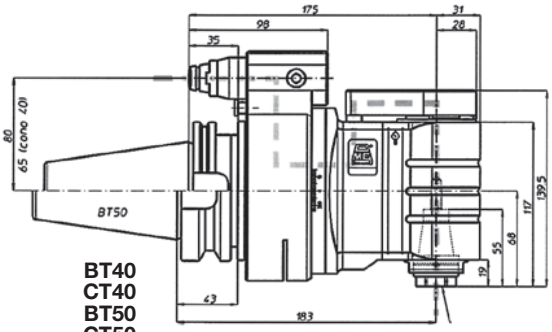

BT40
CT40
BT50
CT50

ECX25 max. Ø16

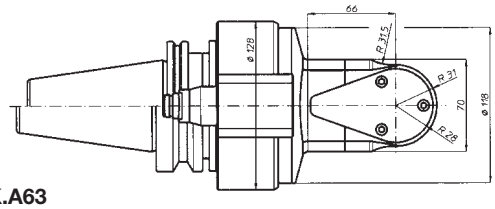

HSK.A63
HSK.A80
HSK.A100

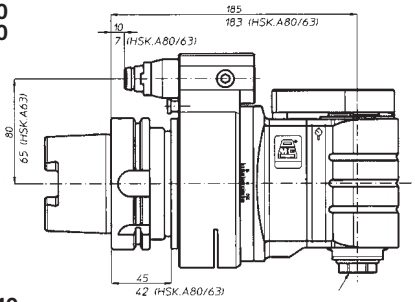

NMTB40
NMTB50

ECX25 max. Ø16

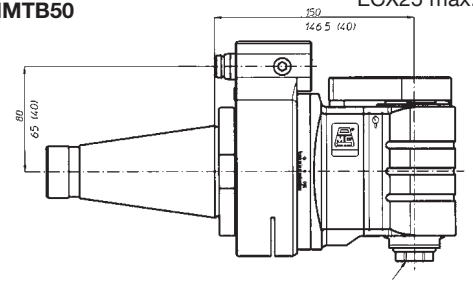

ECX25 max. Ø16

Power
Max. Torque

TA16.2P

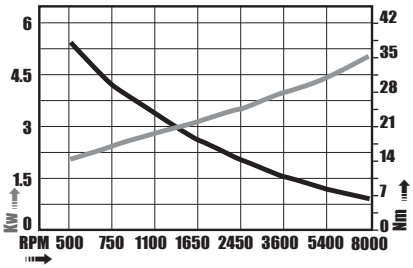

Taper	Order No.	Device Type	Output Spindle Collet Style	Max. Capacity Ø
BT40	TA16PDB40	BT40-TA16PD	ECX/ER25	16mm (5/8”)
BT50	TA16PDB50	BT50-TA16PD	ECX/ER25	16mm (5/8”)
CT40	TA16PDC40	CT40-TA16PD	ECX/ER25	16mm (5/8”)
CT50	TA16PDC50	CT50-TA16PD	ECX/ER25	16mm (5/8”)
HSK63A	TA16PDH63	HSK63A-TA16PD	ECX/ER25	16mm (5/8”)
HSK80A	TA16PDH80	HSK80A-TA16PD	ECX/ER25	16mm (5/8”)
HSK100A	TA16PDH100	HSK100A-TA16PD	ECX/ER25	16mm (5/8”)
NMTB40	TA16PDN40	NMTB40-TA16PD	ECX/ER25	16mm (5/8”)
NMTB50	TA16PDN50	NMTB50-TA16PD	ECX/ER25	16mm (5/8”)

TA20.PD Right Angle Heads

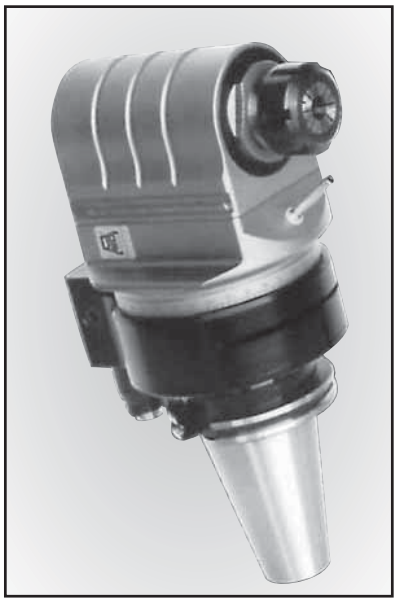

With Coolant Through Output Spindle

Ø20 3/4”	M14 9/16”	1-1	3500	14-50	8 bar

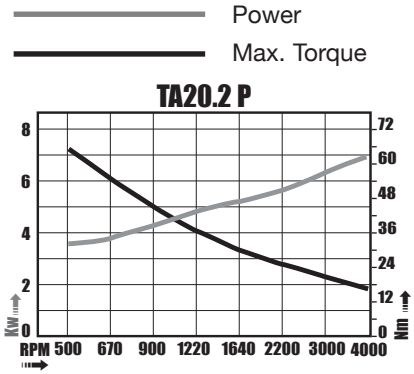

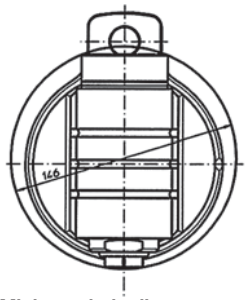

Minimum hole diameter through which the head enters.

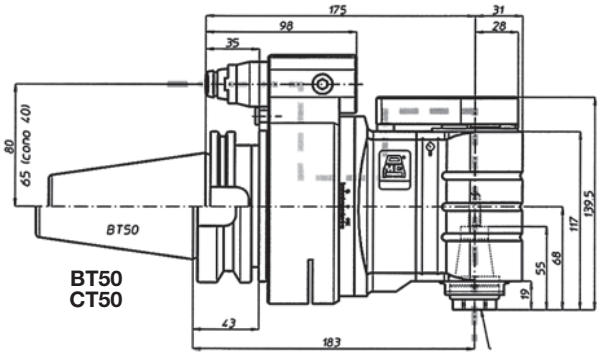

BT50
CT50

ECX32 max. Ø20

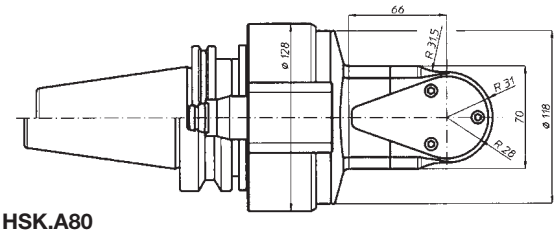

HSK.A80
HSK.A100

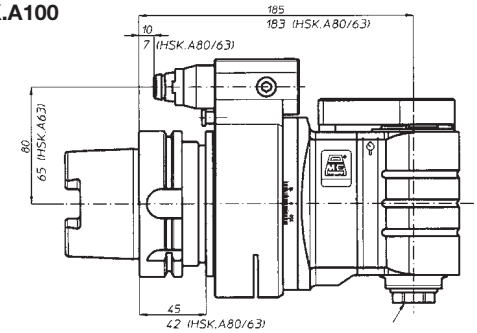

ECX32 max. Ø20

NMTB50

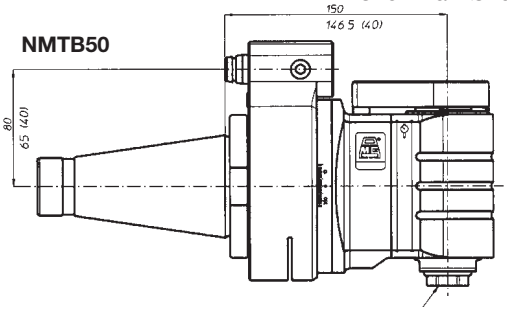

ECX32 max. Ø20

Taper	Order No.	Device Type	Output Spindle Collet Style	Max. Capacity Ø
BT50	TA20PDB50	BT50-TA20PD	ECX/ER32	20mm (3/4”)
CT50	TA20PDC50	CT50-TA20PD	ECX/ER32	20mm (3/4”)
HSK80A	TA20PDH100	HSK80A-TA20PD	ECX/ER32	20mm (3/4”)
HSK100A	TA20PDH100	HSK100A-TA20PD	ECX/ER32	20mm (3/4”)
NMTB50	TA20PDN50	NMTB50-TA20PD	ECX/ER32	20mm (3/4”)

TA26.PD Right Angle Heads

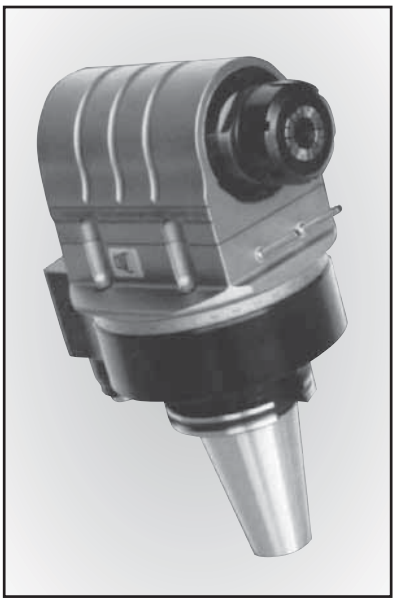

With Coolant Through Output Spindle

Ø26 1”	M20 3/4”	1-1	2500	21-50	8 bar

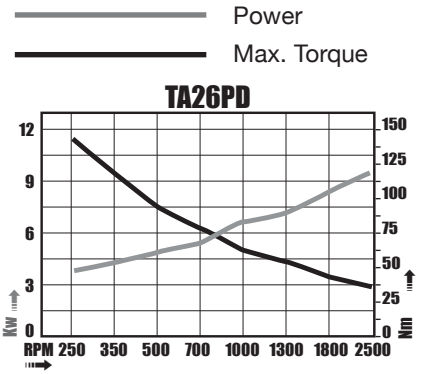

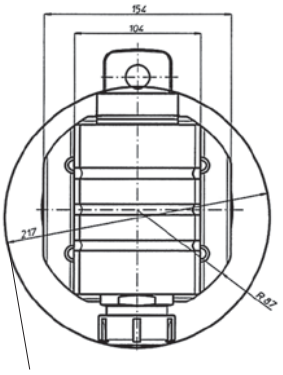

Minimum hole diameter through which the head enters.

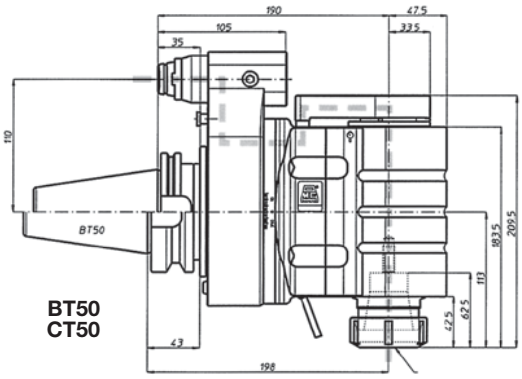

BT50
CT50

ECX40 max. Ø30

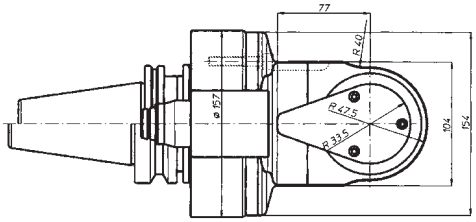

HSK.A100

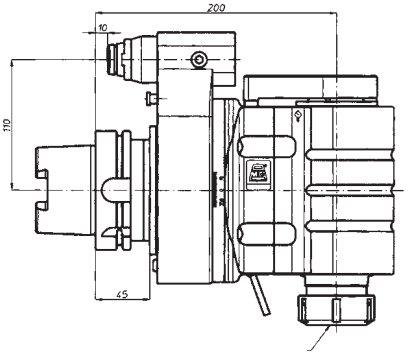

ECX40 max. Ø30

NMTB50

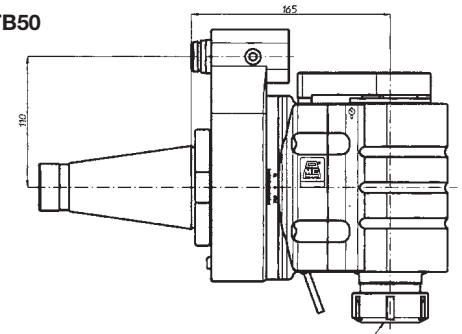

ECX40 max. Ø30

Taper	Order No.	Device Type	Output Spindle Collet Style	Max. Capacity Ø
BT50	TA26PDB50	BT50-TA26PD	ECX/ER40	26mm (1”)
CT50	TA26PDC50	CT50-TA26PD	ECX/ER40	26mm (1”)
HSK100A	TA26PDH100	HSK100A-TA26PD	ECX/ER40	26mm (1”)
NMTB50	TA26PDN50	NMTB50-TA26PD	ECX/ER40	26mm (1”)

TA013... Right Angle Heads

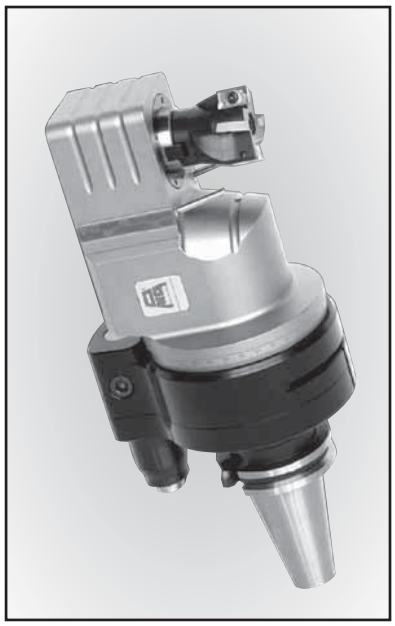

TA013...

Ø13	M10	1-1	4500	7.8-40 10.5-50

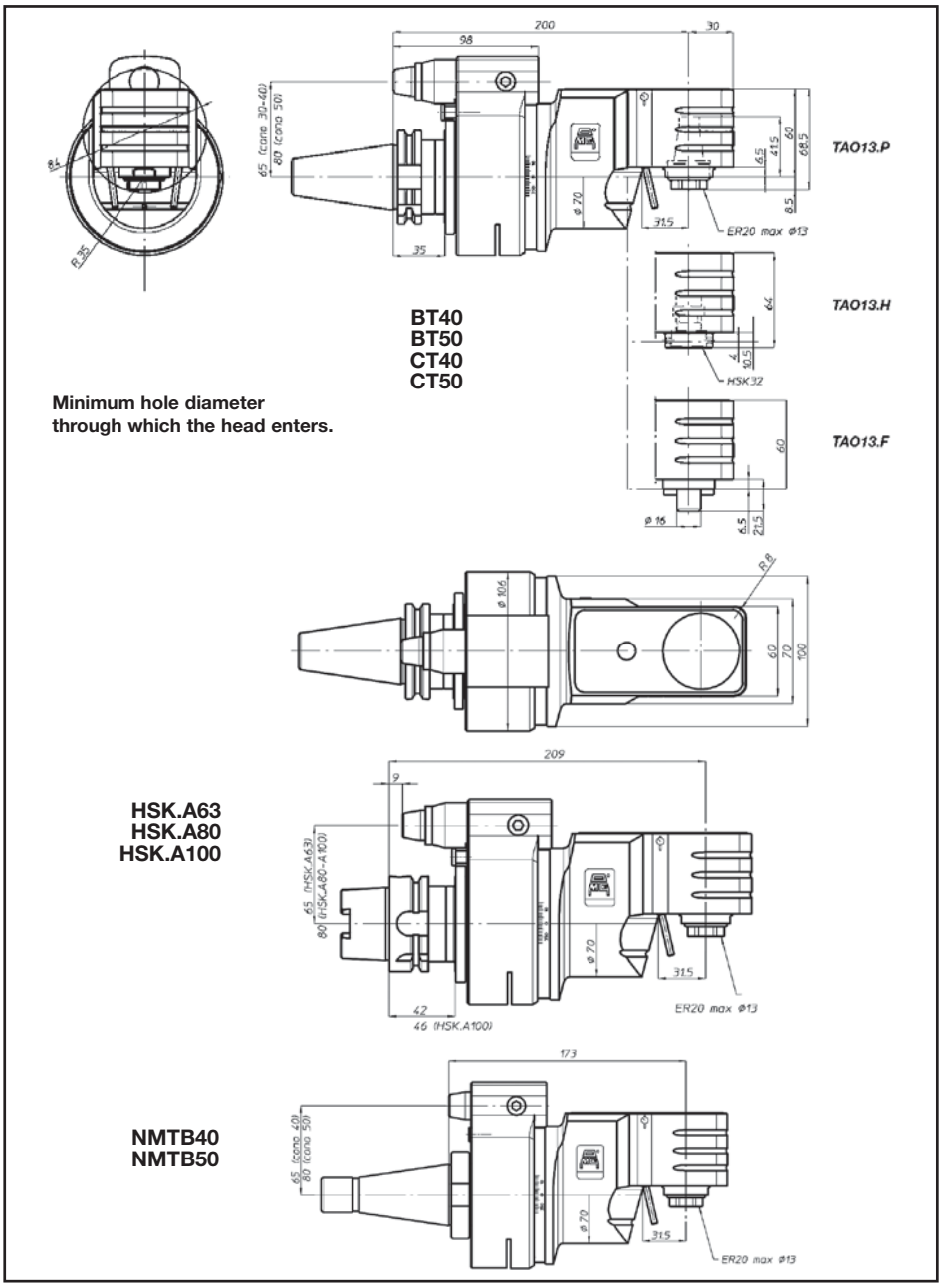

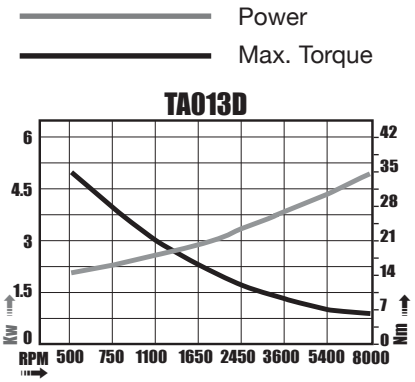

Taper	Order No.	Device Type	Output Spindle Collet Style	Max. Capacity Ø
BT40	TA013*B40	BT40-TA013P*	ECX/ER20	13mm (1/2”)
BT50	TA013*B50	BT50-TA013P*	ECX/ER20	13mm (1/2”)
CT40	TA013*C40	CT40-TA013P*	ECX/ER20	13mm (1/2”)
CT50	TA013*C50	CT50-TA013P*	ECX/ER20	13mm (1/2”)
HSK63A	TA013*H63	HSK63A-TA013P*	ECX/ER20	13mm (1/2”)
HSK80A	TA013*H80	HSK80A-TA013P*	ECX/ER20	13mm (1/2”)
HSK100A	TA013*H100	HSK100A-TA013P*	ECX/ER20	13mm (1/2”)
NMTB40	TA013*N40	NMT40-TA013P*	ECX/ER20	13mm (1/2”)
NMTB50	TA013*N50	NMTB50-TA013P*	ECX/ER20	13mm (1/2”)

* P= ECX/ER20 Output H=HSK32A Output F= Facemill Output

TA020... Right Angle Heads

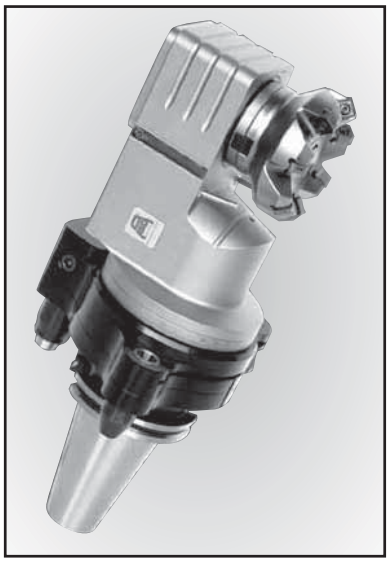

TA020...

Ø20	M14	1-1	3500	14.5-50

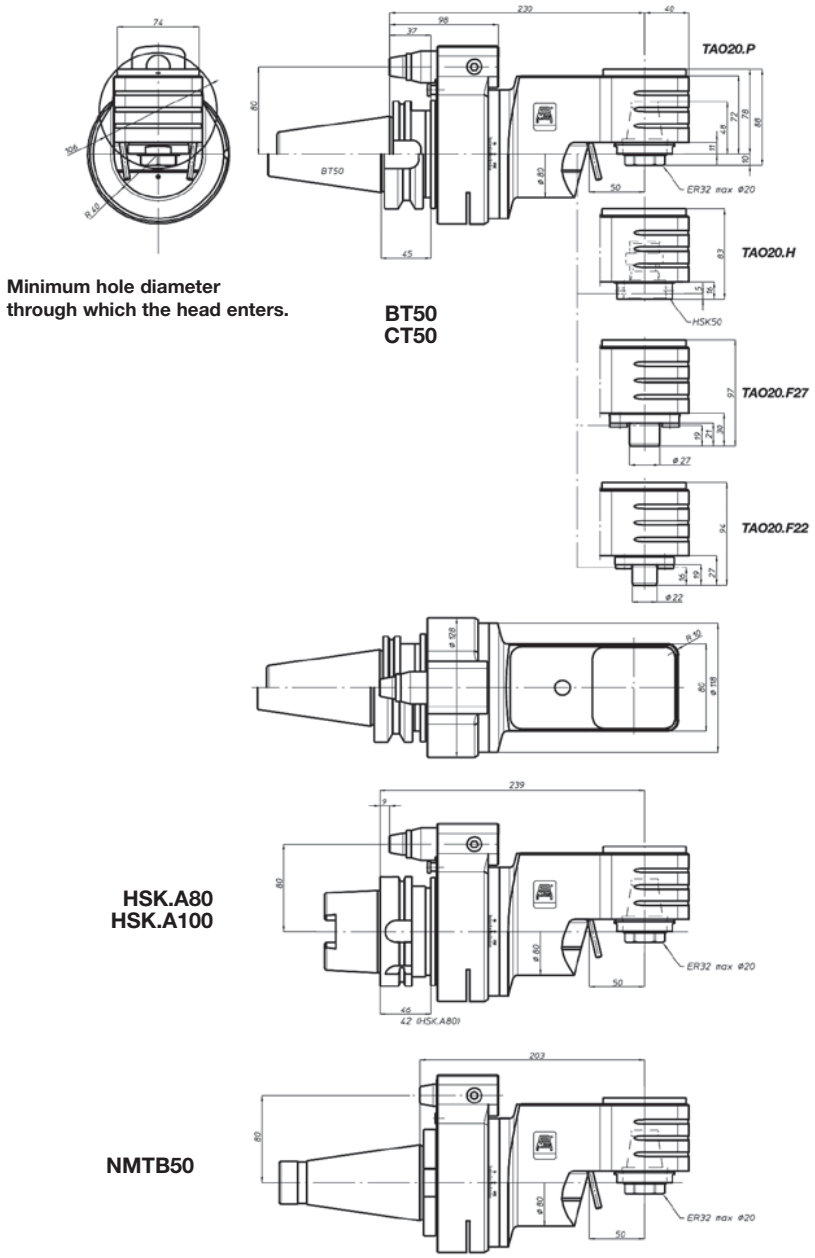

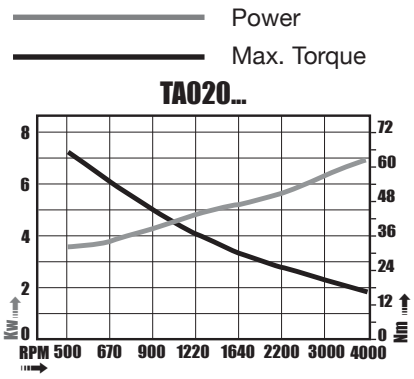

Taper	Order No.	Device Type	Output Spindle Collet Style	Max. Capacity Ø
BT50	TA020*B50	BT50-TA020PD	ECX/ER32	20mm (3/4”)
CT50	TA020*C50	CT50-TA020PD	ECX/ER32	20mm (3/4”)
HSK80A	TA020*H80	HSK80A-TA020PD	ECX/ER32	20mm (3/4”)
HSK100A	TA020*H100	HSK100A-TA020PD	ECX/ER32	20mm (3/4”)
NMTB50	TA020*N50	NMTB50-TA020PD	ECX/ER32	20mm (3/4”)

* P = ECX/ER32 Output H = HSK50A Output F= Facemill Output

TA013...D Right Angle Heads

TA013...D

Ø13	M10	1-1	4500	7.5-40 10.5-50	40 bar

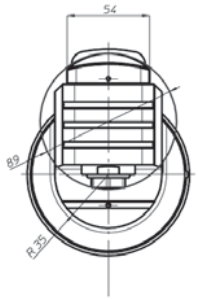

Minimum hole diameter through which the head enters.

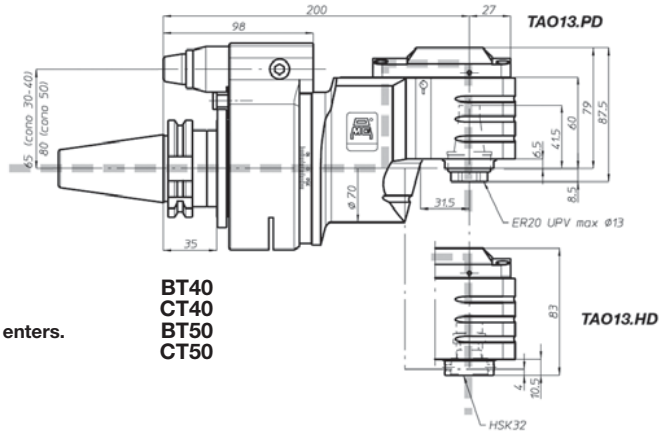

BT40
CT40
BT50
CT50

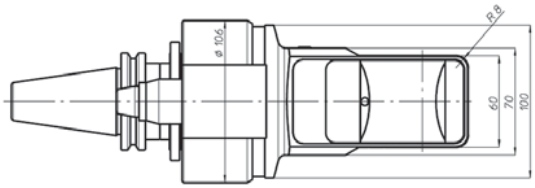

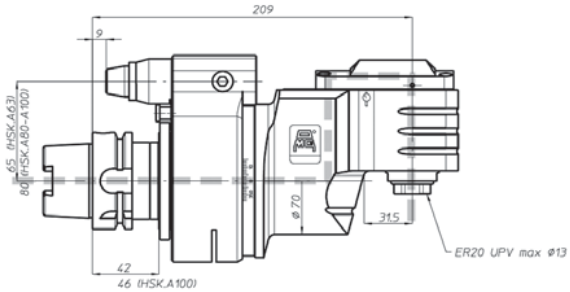

HSK.A63
HSK.A80
HSK.A100

Power
Max. Torque

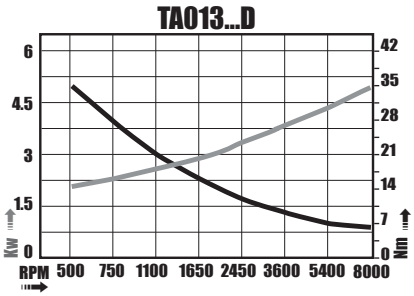

Taper	Order No.	Device Type	Output Spindle Collet Style	Max. Capacity Ø
BT40	TA013*B40	BT40-TA013*D	ECX/ER20	13mm (1/2”)
BT50	TA013*B50	BT50-TA013*D	ECX/ER20	13mm (1/2”)
CT40	TA013*C40	CT40-TA013*D	ECX/ER20	13mm (1/2”)
CT50	TA013*C50	CT50-TA013*D	ECX/ER20	13mm (1/2”)
HSK63A	TA013*H63	HSK63A-TA013*D	ECX/ER20	13mm (1/2”)
HSK80A	TA013*H80	HSK80A-TA013*D	ECX/ER20	13mm (1/2”)
HSK100A	TA013*H100	HSK100A-TA013*D	ECX/ER20	13mm (1/2”)

* P = ECX/ER20 Output H = HSK32A Output

TA020...D Right Angle Heads

TA020...D

Ø20 3/4”	M14 9/16”	1-1	3500 Rpm	14-50 Kg	8 bar

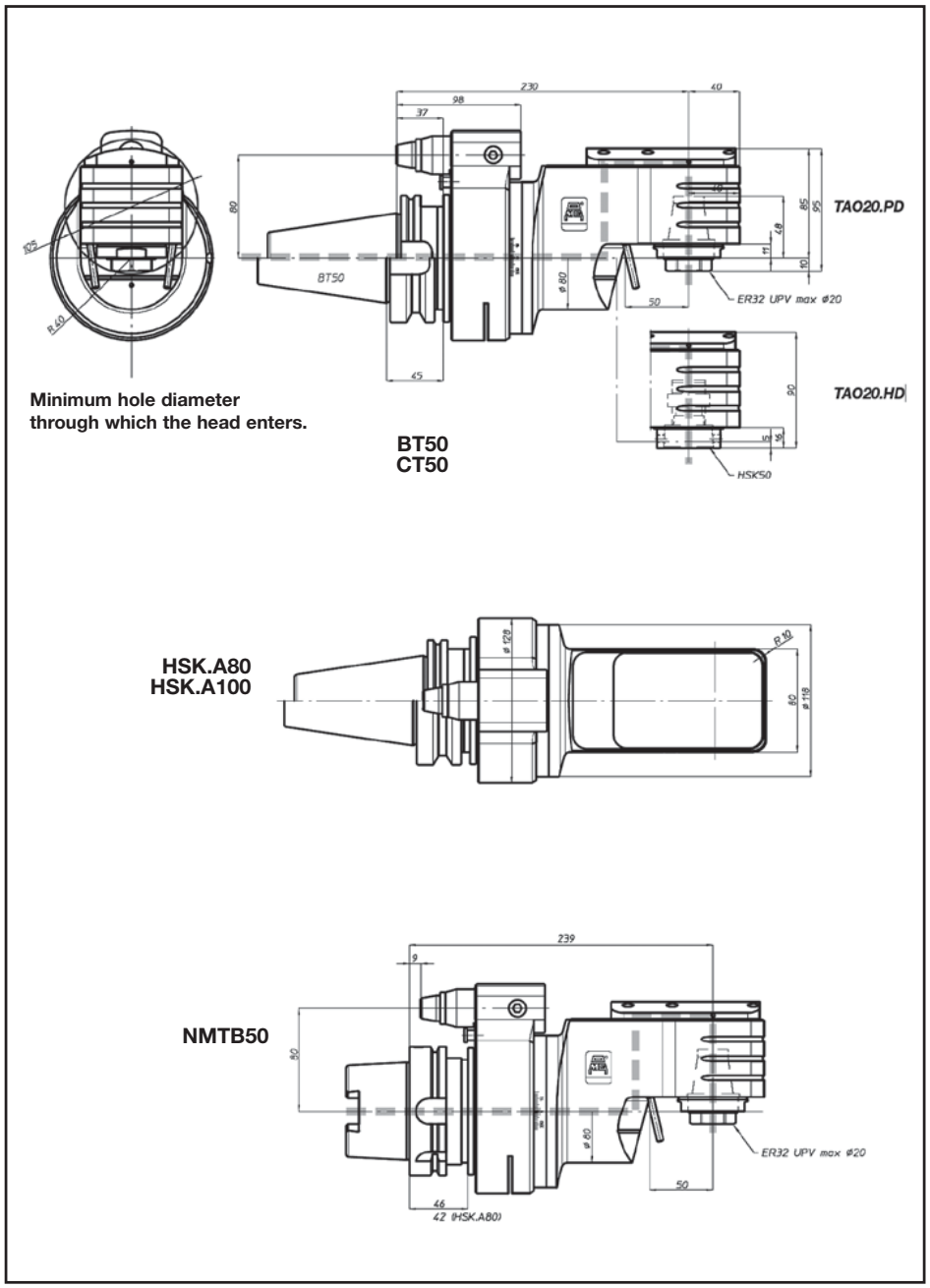

Power

Max. Torque

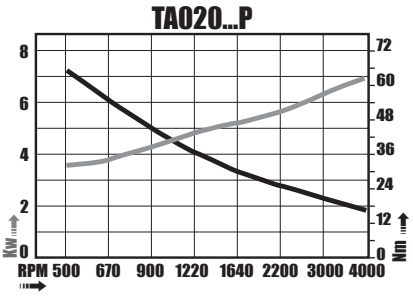

Taper	Order No.	Device Type	Output Spindle Collet Style	Max. Capacity Ø
BT50	TA020*DB50	BT50-TA020*D	ECX/ER32	20mm (3/4”)
CT50	TA020*DC50	CT50-TA020*D	ECX/ER32	20mm (3/4”)
HSK80A	TA020*DH100	HSK80A-TA020*D	ECX/ER32	20mm (3/4”)
HSK100A	TA020*DH100	HSK100A-TA020*D	ECX/ER32	20mm (3/4”)

* P= ECX/ER32 Output H = HSK50A Output

TA07.2P Right Angle Heads

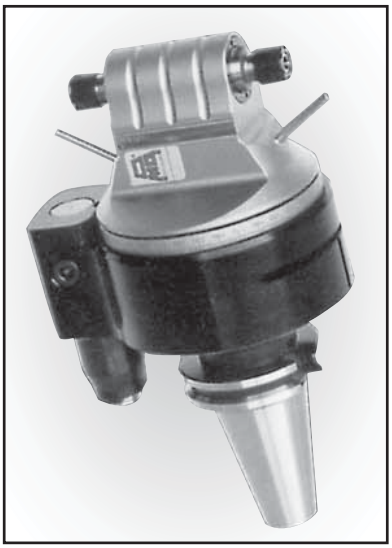

With Double Spindle Output

Ø7 1/4”	M6 1/4”	1-1	10000	5-40 7-50

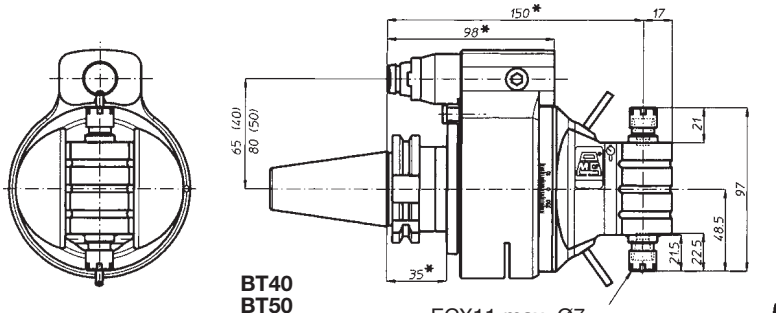

BT40
BT50
CT40
CT50

ECX11 max. Ø7

* Increase the dimensions by 8 mm when using BT50 shank.

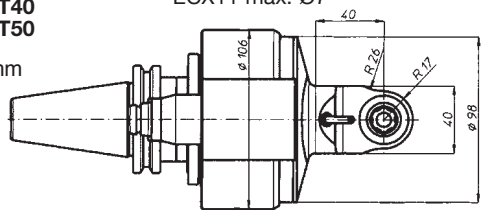

HSK-A63
HSK-A80
HSK-A100

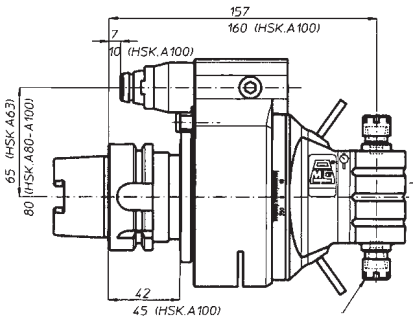

ECX11 max. Ø7

NMTB40
NMTB50

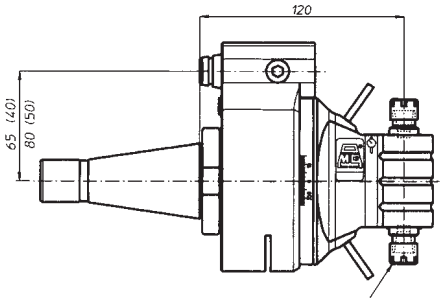

ECX11 max. Ø7

Power
Max. Torque

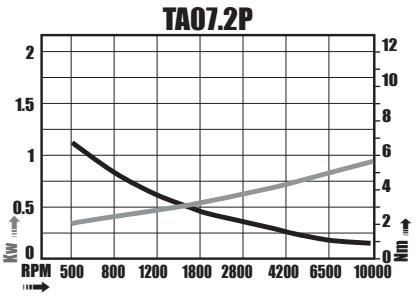

Taper	Order No.	Device Type	Output Spindle Collet Style	Max. Capacity Ø
BT40	TA072PB40	BT40-TA07.2P	ECX/ER11	7 mm
BT50	TA072PB50	BT50-TA07.2P	ECX/ER11	7 mm
CT40	TA072PC40	CT40-TA07.2P	ECX/ER11	7 mm
CT50	TA072PC50	CT50-TA07.2P	ECX/ER11	7 mm
HSK63A	TA072PH63	HSK63A-TA07.2P	ECX/ER11	7 mm
HSK80A	TA072PH80	HSK80A-TA07.2P	ECX/ER11	7 mm
HSK100A	TA072PH100	HSK100A-TA07.2P	ECX/ER11	7 mm
NMTB40	TA072PN40	NMTB40-TA07.2P	ECX/ER11	7 mm
NMTB50	TA072PN50	NMTB50-TA07.2P	ECX/ER11	7 mm

TA10.2P Right Angle Heads

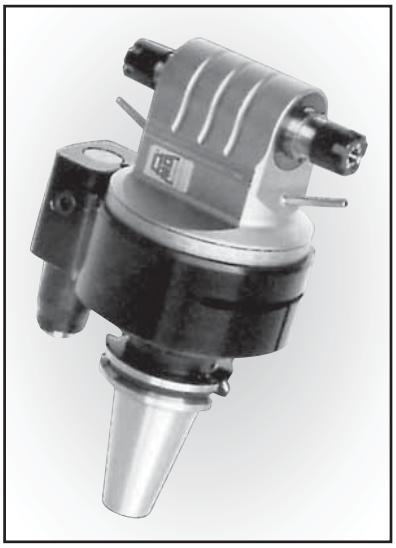

With Double Spindle Output

Ø12	M10	1-1	10000	5.5-40 7.5-50

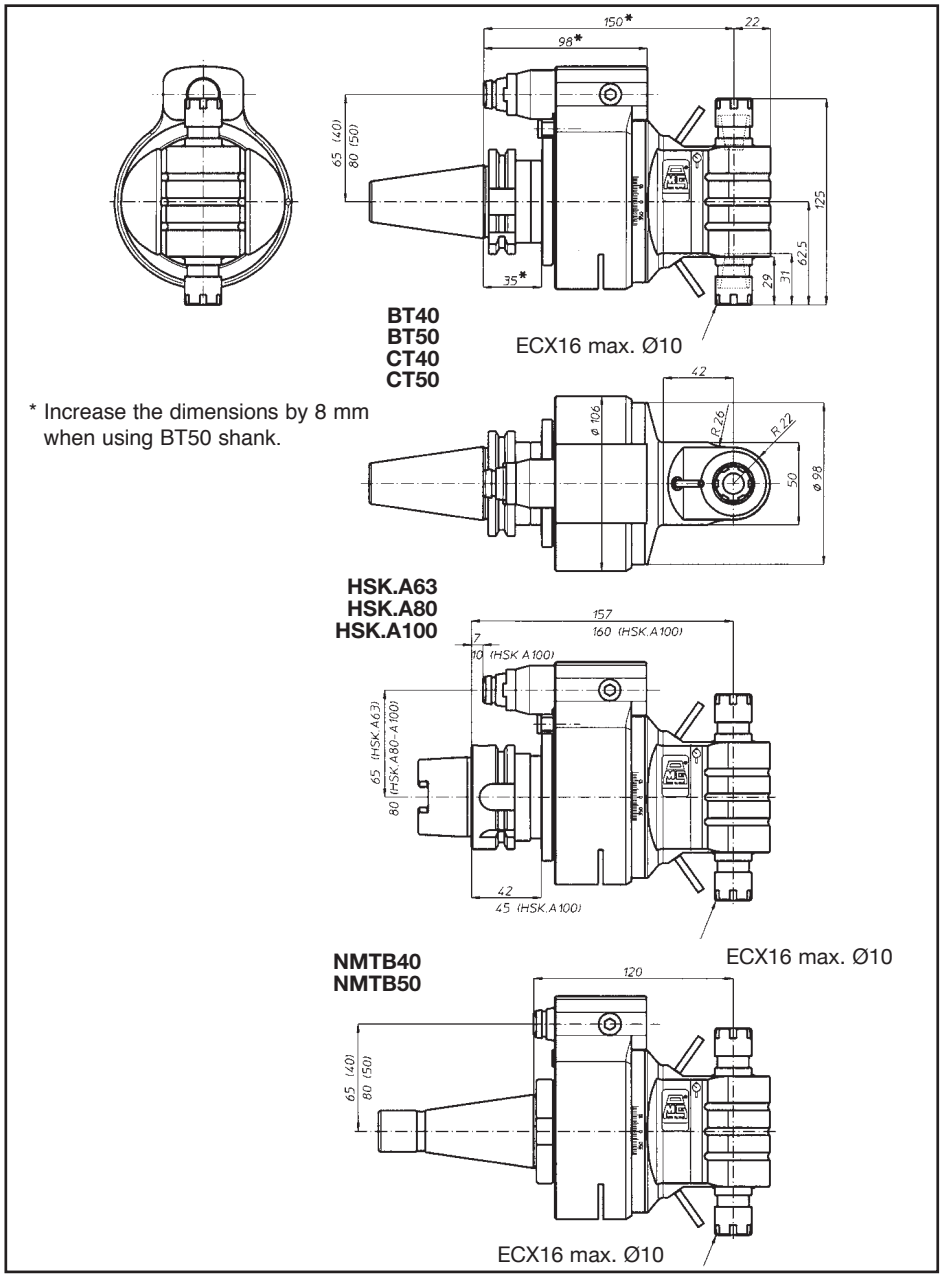

* Increase the dimensions by 8 mm when using BT50 shank.

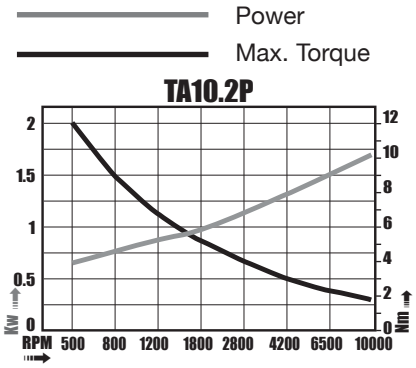

Taper	Order No.	Device Type	Output Spindle Collet Style	Max. Capacity Ø
BT40	TA102PB40	BT40-TA10.2P	ECX/ER16	10 mm (3/8”)
BT50	TA102PB50	BT50-TA10.2P	ECX/ER16	10 mm (3/8”)
CT40	TA102PC40	CT40-TA10.2P	ECX/ER16	10 mm (3/8”)
CT50	TA102PC50	CT50-TA10.2P	ECX/ER16	10 mm (3/8”)
HSK63A	TA102PH63	HSK63A-TA10.2P	ECX/ER16	10 mm (3/8”)
HSK80A	TA102PH80	HSK80A-TA10.2P	ECX/ER16	10 mm (3/8”)
HSK100A	TA102PH100	HSK100A-TA10.2P	ECX/ER16	10 mm (3/8”)
NMTB40	TA102PN40	NMTB40-TA10.2P	ECX/ER16	10 mm (3/8”)
NMTB50	TA102PN50	NMTB50-TA10.2P	ECX/ER16	10 mm (3/8”)

TA13.2P Right Angle Heads

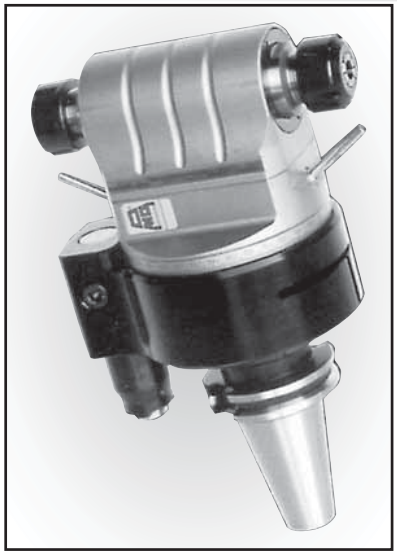

With Double Spindle Output

Ø13	M10	1-1	8000	6.5-40 7.5-50

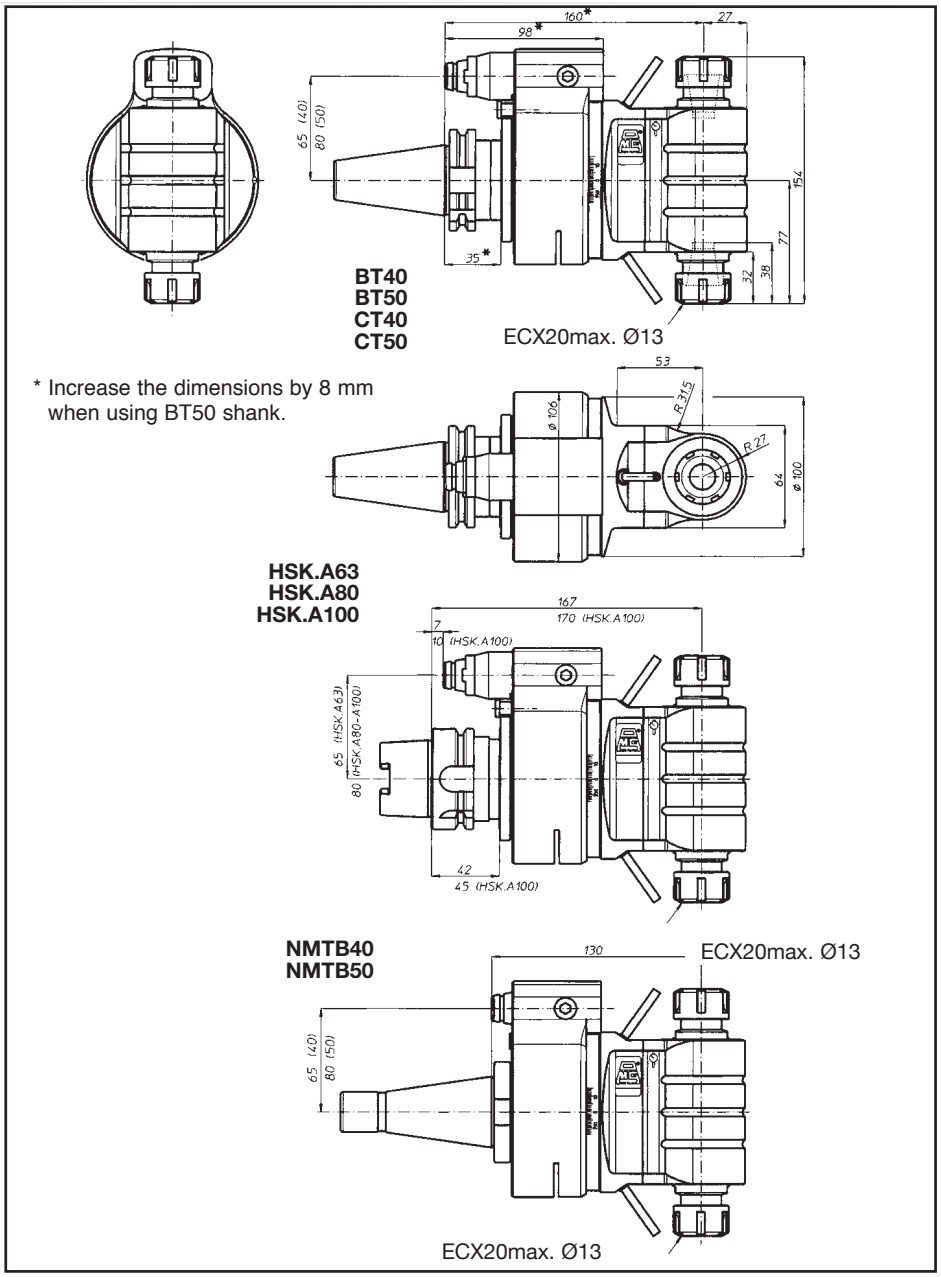

Power

Max. Torque

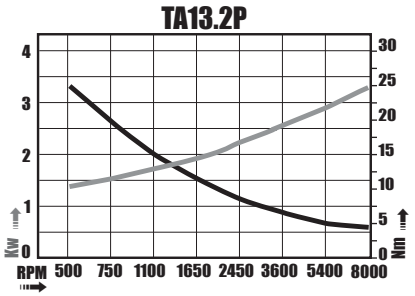

Taper	Order No.	Device Type	Output Spindle Collet Style	Max. Capacity Ø
BT40	TA132PB40	BT40-TA13.2P	ECX/ER20	13 mm (1/2”)
BT50	TA132PB50	BT50-TA13.2P	ECX/ER20	13 mm (1/2”)
CT40	TA132PC40	CT40-TA13.2P	ECX/ER20	13 mm (1/2”)
CT50	TA132PC50	CT50-TA13.2P	ECX/ER20	13 mm (1/2”)
HSK63A	TA132PH63	HSK63A-TA13.2P	ECX/ER20	13 mm (1/2”)
HSK80A	TA132PH80	HSK80A-TA13.2P	ECX/ER20	13 mm (1/2”)
HSK100A	TA132PH100	HSK100A-TA13.2P	ECX/ER20	13 mm (1/2”)
NMTB40	TA132PN40	NMTB40-TA13.2P	ECX/ER20	13 mm (1/2”)
NMTB50	TA132PN50	NMTB50-TA13.2P	ECX/ER20	13 mm (1/2”)

TA16.2P Right Angle Heads

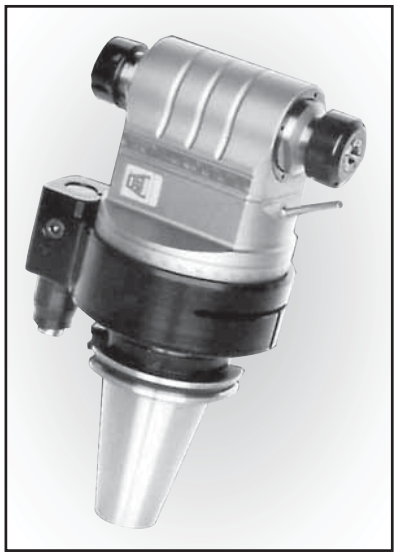

With Double Spindle Output

Ø16	M12	1-1	5000	7.7-40 11.2-50

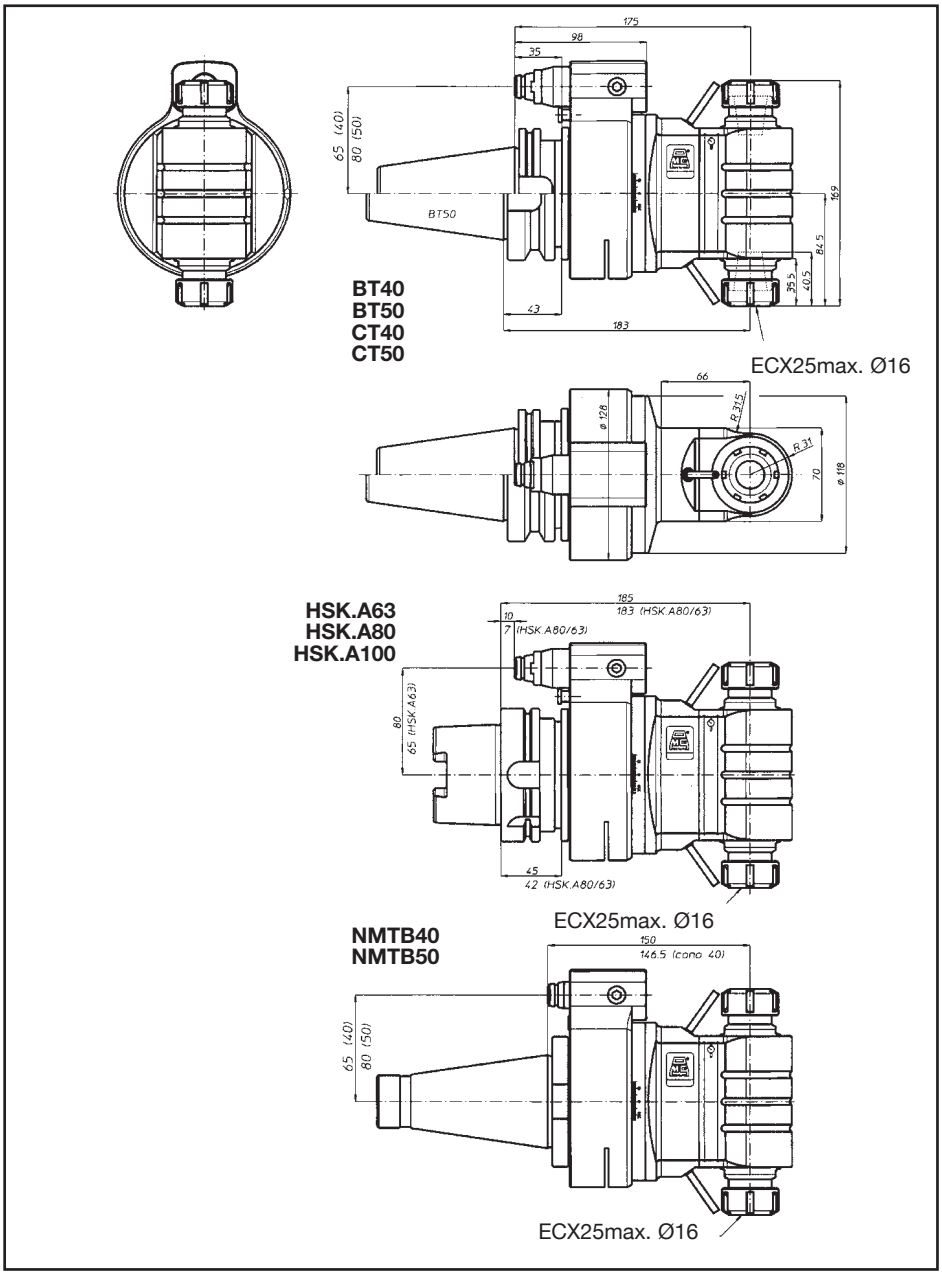

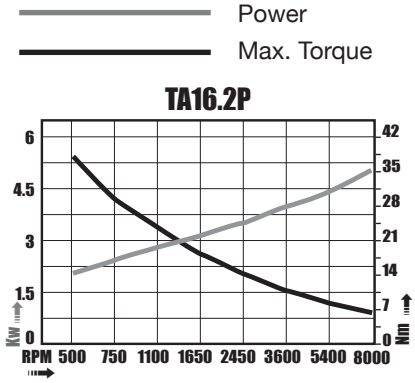

Taper	Order No.	Device Type	Output Spindle Collet Style	Max. Capacity Ø
BT40	TA162PB40	BT40-TA16.2P	ECX/ER25	16 mm (5/8”)
BT50	TA162PB50	BT50-TA16.2P	ECX/ER25	16 mm (5/8”)
CT40	TA162PC40	CT40-TA16.2P	ECX/ER25	16 mm (5/8”)
CT50	TA162PC50	CT50-TA16.2P	ECX/ER25	16 mm (5/8”)
HSK63A	TA162PH63	HSK63A-TA16.2P	ECX/ER25	16 mm (5/8”)
HSK80A	TA162PH80	HSK80A-TA16.2P	ECX/ER25	16 mm (5/8”)
HSK100A	TA162PH100	HSK100A-TA16.2P	ECX/ER25	16 mm (5/8”)
NMTB40	TA162PN40	NMTB40-TA16.2P	ECX/ER25	16 mm (5/8”)
NMTB50	TA162PN50	NMTB50-TA16.2P	ECX/ER25	16 mm (5/8”)

TA20.2P Right Angle Heads

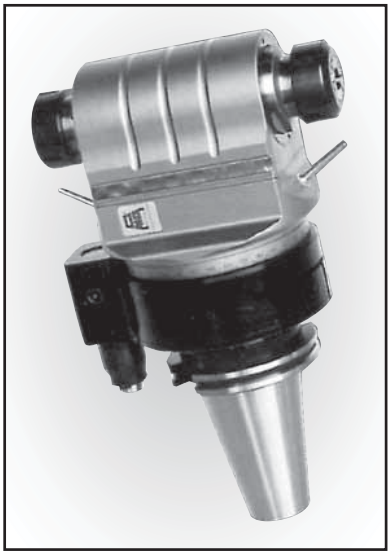

With Double Spindle Output

Ø20	M14	1-1	3500	15-50

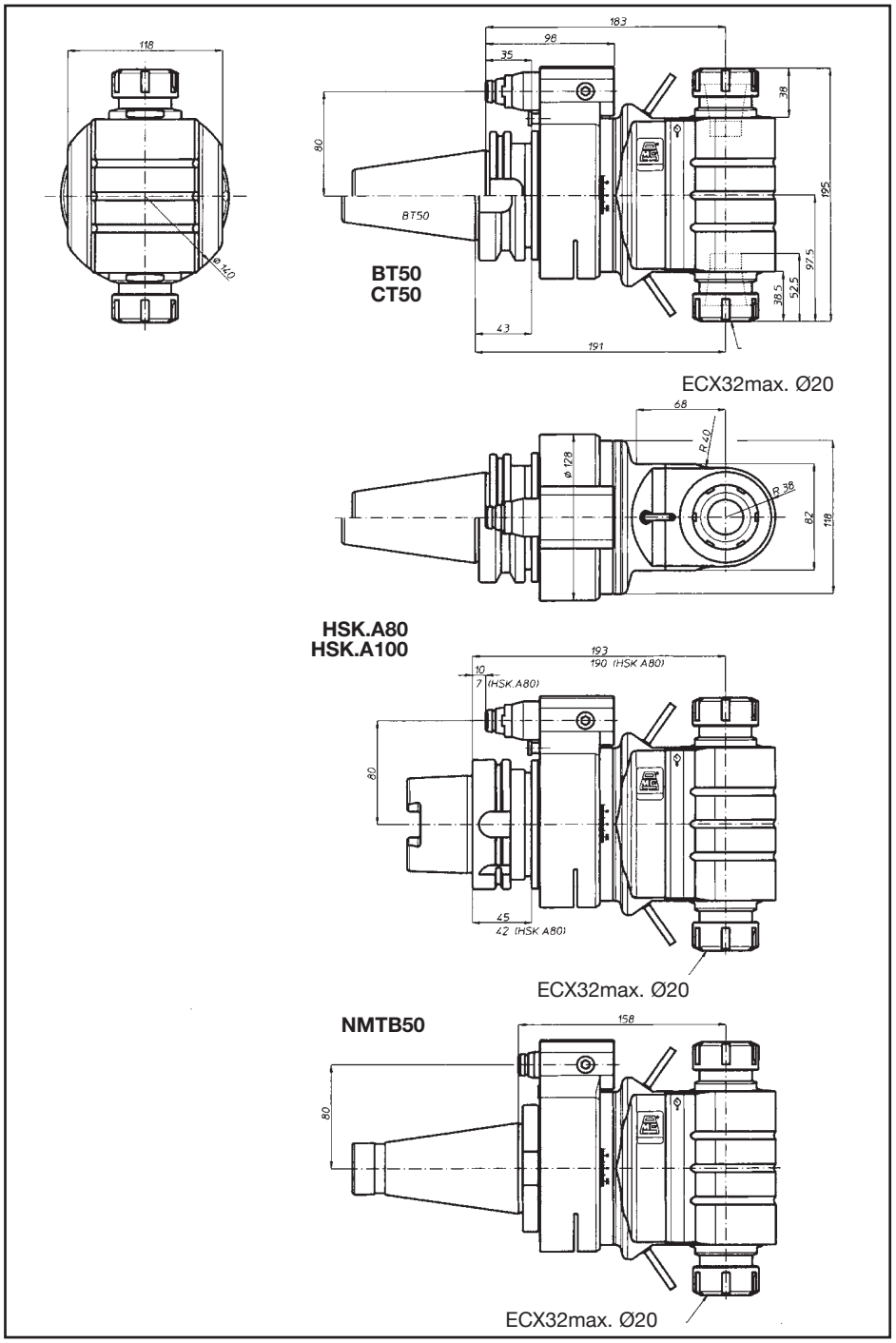

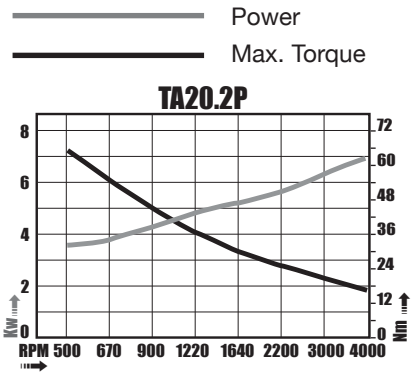

Taper	Order No.	Device Type	Output Spindle Collet Style	Max. Capacity Ø
BT50	TA202PB50	BT50-TA20.2P	ECX/ER32	20 mm (3/4”)
CT50	TA202PC50	CT50-TA20.2P	ECX/ER32	20 mm (3/4”)
HSK80A	TA202PH80	HSK80A-TA20.2P	ECX/ER32	20 mm (3/4”)
HSK100A	TA202PH100	HSK100A-TA20.2P	ECX/ER32	20 mm (3/4”)
NMTB50	TA202PN50	NMTB50-TA20.2P	ECX/ER32	20 mm (3/4”)

TA26.2P Right Angle Heads

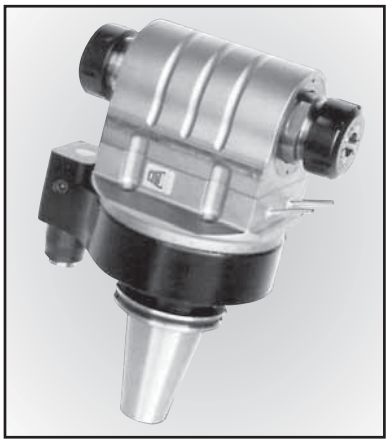

With Double Spindle Output

Ø26 1”	M20 3/4”	1-1	2500	22.5 50

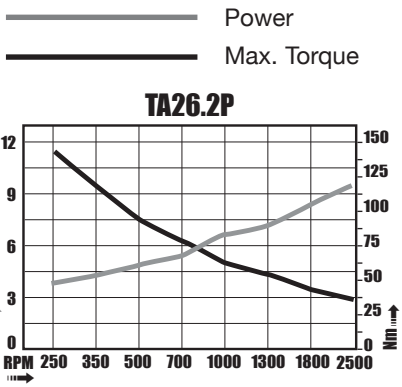

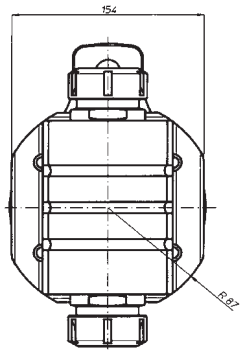

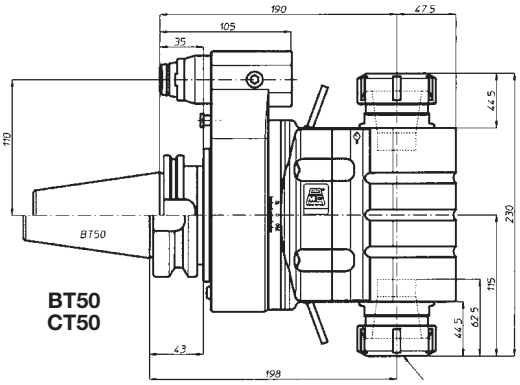

BT50
CT50

ECX40max. Ø30

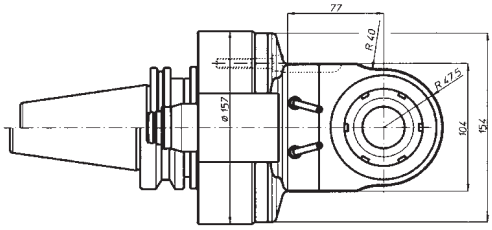

HSK.A100

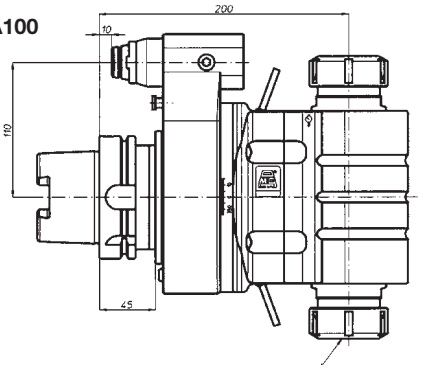

ECX40max. Ø30

NMTB50

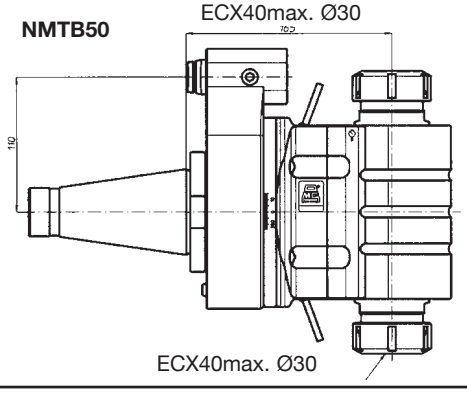

ECX40max. Ø30

Taper	Order No.	Device Type	Output Spindle Collet Style	Max. Capacity Ø
BT50	TA262PB50	BT50-TA26.2P	ECX/ER40	26 mm (1”)
CT50	TA262PC50	CT50-TA26.2P	ECX/ER40	26 mm (1”)
HSK100A	TA262PH100	HSK100A-TA26.2P	ECX/ER40	26 mm (1”)
NMTB50	TA262PN50	NMTB50-TA26.2P	ECX/ER40	26 mm (1”)

Angle Head Accessories

(Old Style) Torque Arm & Stop Block

Heads with shank 40

In your application, when possible, position the pin ø18 on the opposite side of the angle heads spindle.

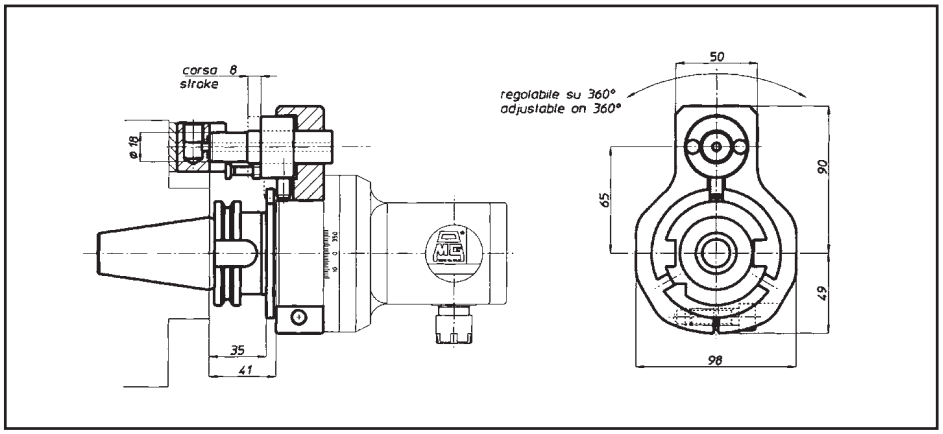

Heads with shank 40-45

In your application, when possible, position the pin ø18 on the opposite side of the angle heads spindle.

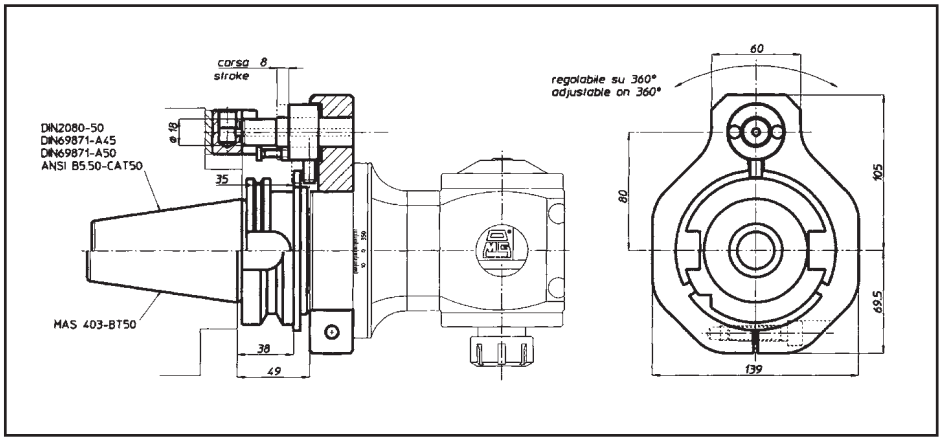

Stop-block

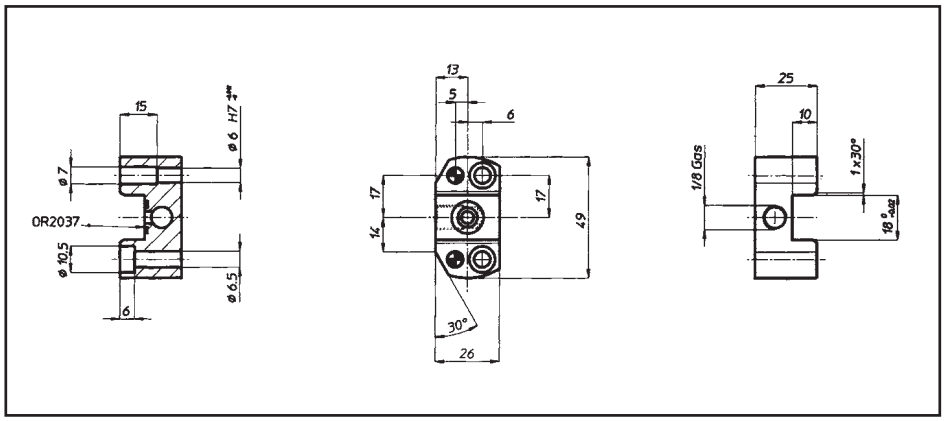

Angle Head Accessories

(New Style) Torque Arm & Stop Block

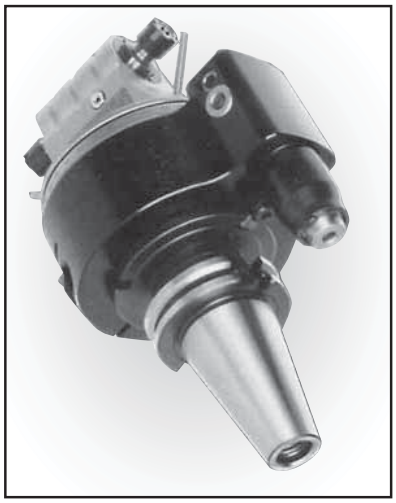

In your application, when possible, position the pin ø18 on the opposite side of the angle heads spindle.

Heads with 40 shank

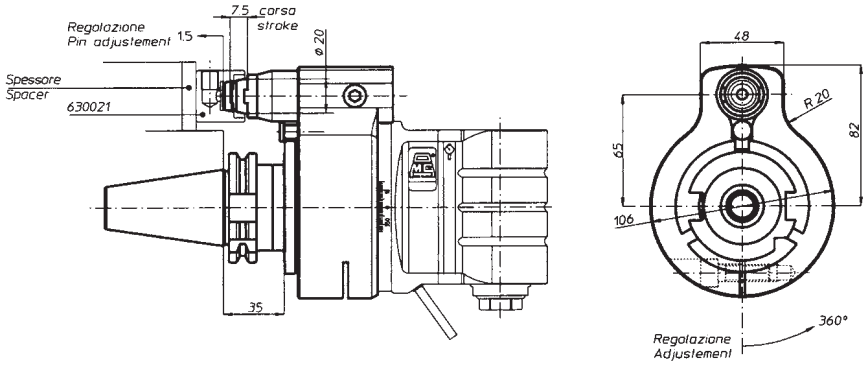

TA04-TA06-TA07-TA10-TA13-TAV10-TAV13-TAF13 heads with 50 shank

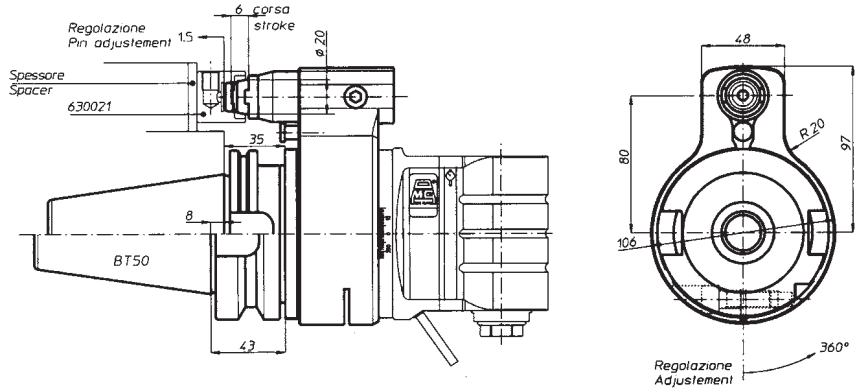

Stop-block

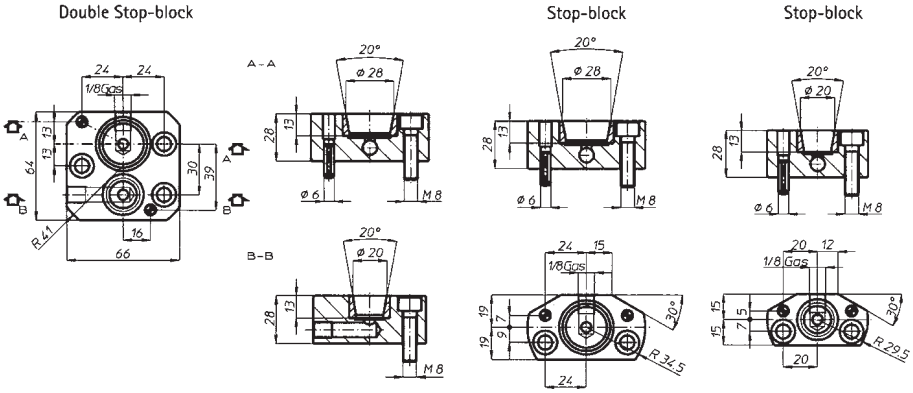

Angle Head Accessories

Triblock Torque Arm

In your application, when possible, position the pin ø18 on the opposite side of the angle heads spindle.

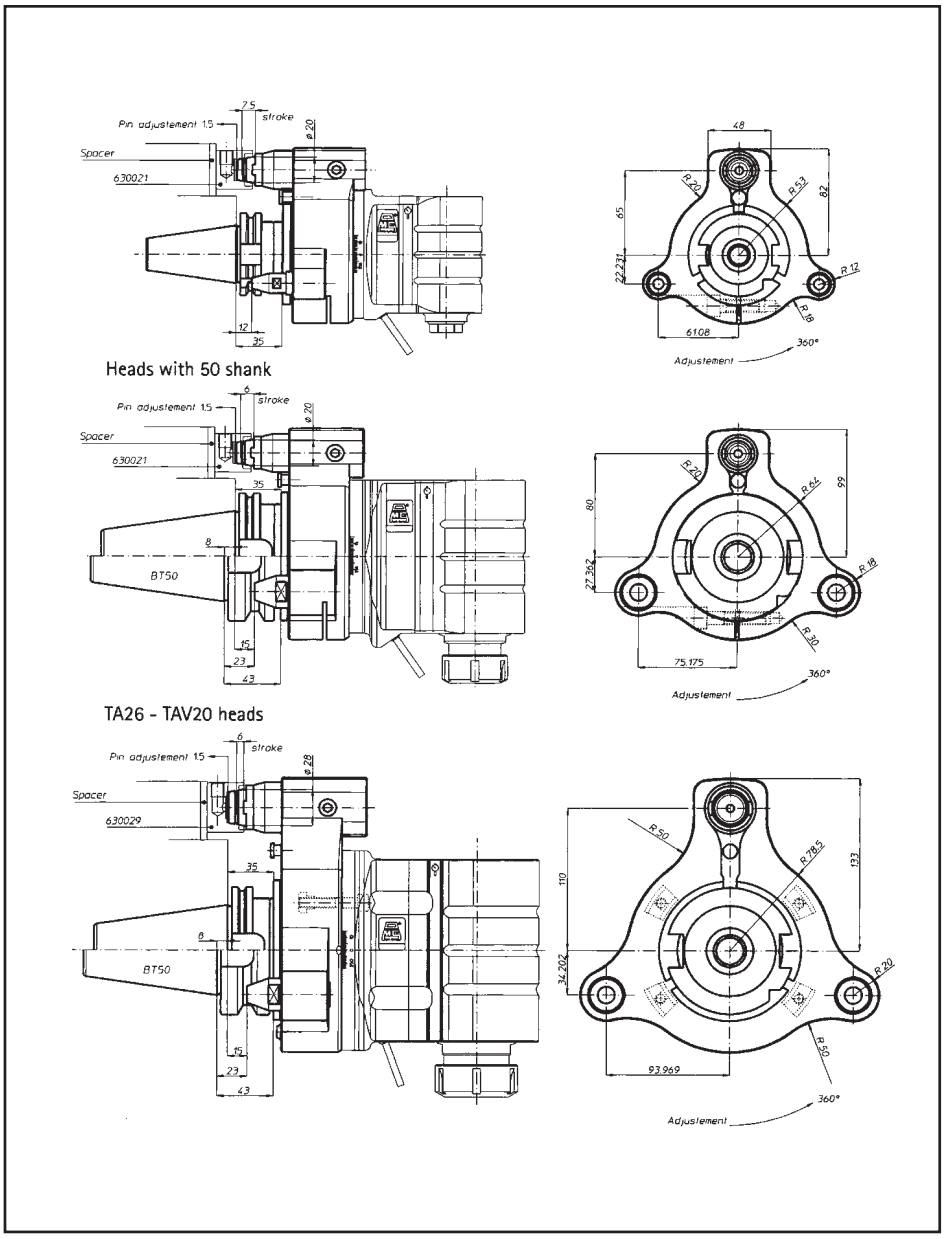

Angle Head Accessories

Triblock Torque Arm

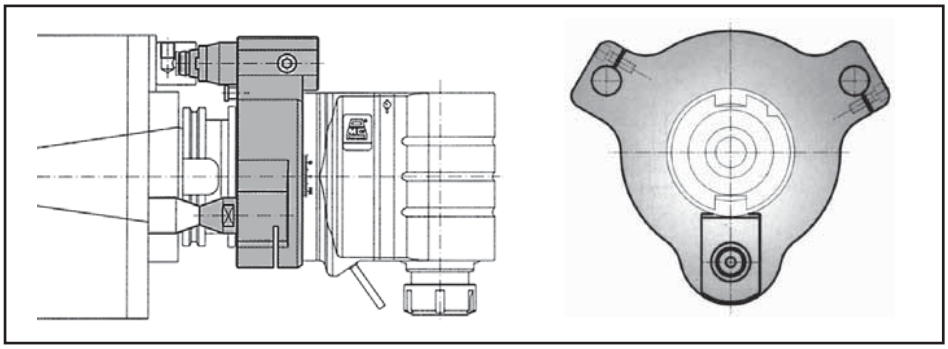

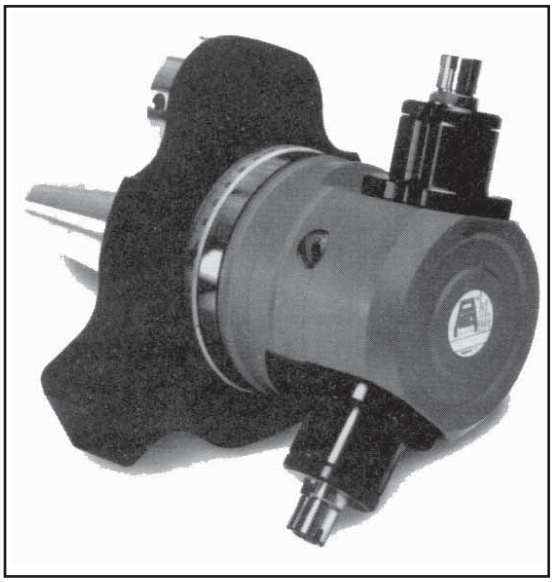

Twin drilling head,
weight Kg18

Twin milling head, nr.2
milling cutter ø100
weight Kg33

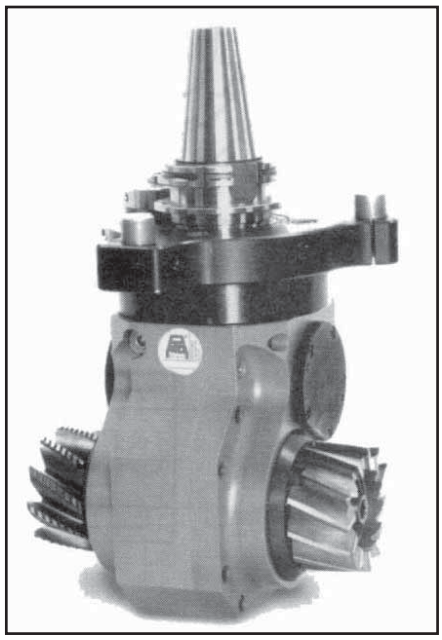

Special Angle Heads

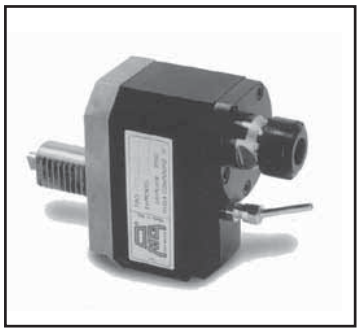

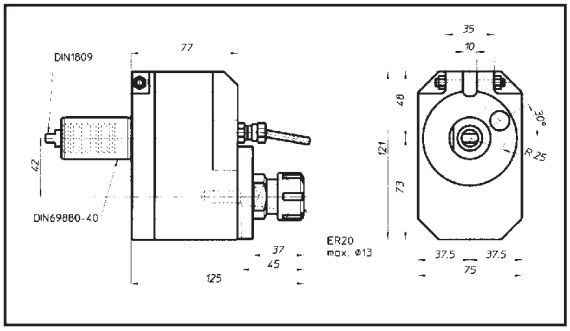

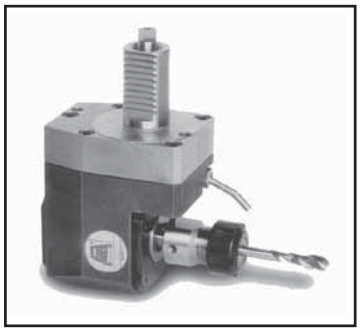

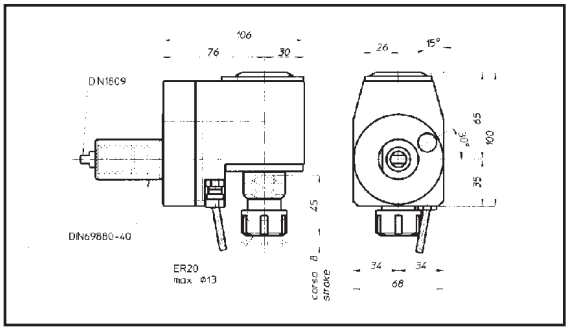

1. Drilling angle head with shank HSK63 - weight kg 5

2. Drilling angle head weight kg 5

3. Twin angle head with nr.2 milling cutter for wood weight kg 3

4. Angle head with two opposite twin spindles weight kg 18

5. Drilling angle head with coolant through the spindle weight kg 21

6. Twin spindle angle head TA9020P not in line with the machine spindle weight kg 24

7. Angle head TA9016 not in line with the machine spindle weight kg 17

1

2

3

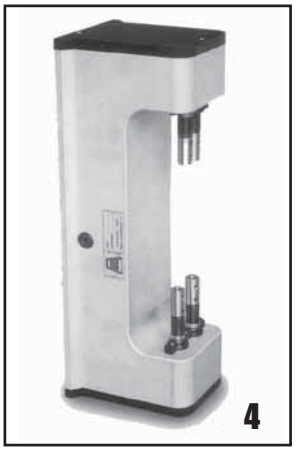
4

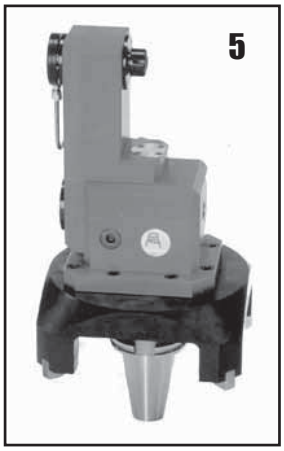
5

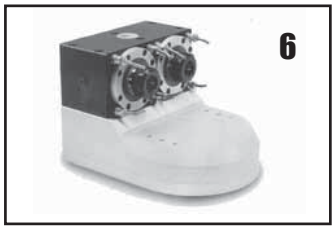
6

7

Special Angle Heads

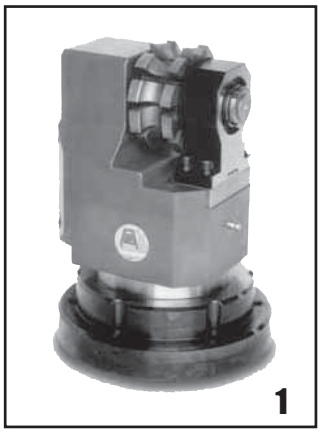
1

2

3

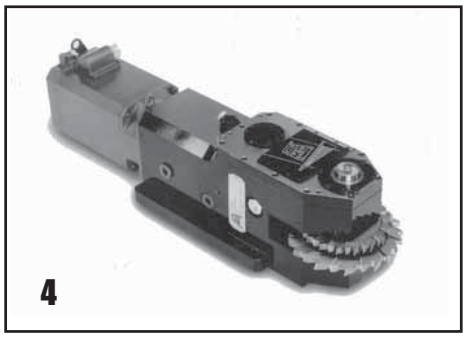
4

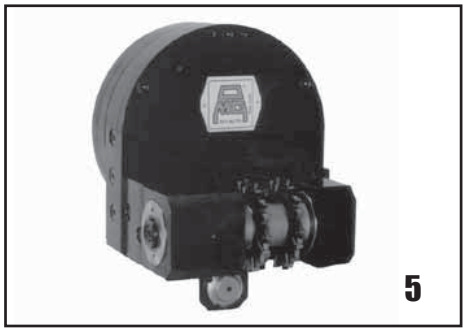
5

6

7

8

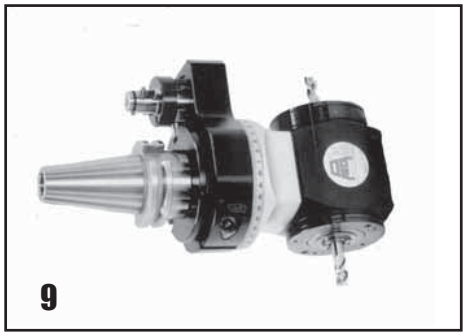
9

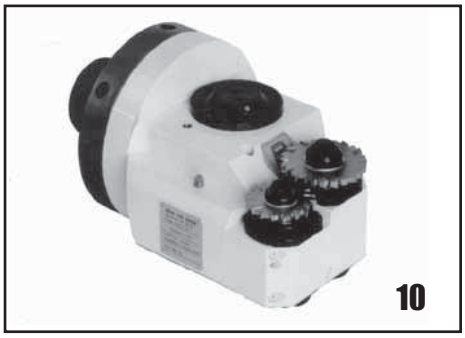
10

1. Milling angle head milling cutter ø 100 - weight kg 22

2. Twin milling head, nr.2 milling cutter ø 60 weight kg 15.5

3. Twin milling head, nr.2 milling cutter ø 130 weight kg 290

4. Milling angle head with brushless motor weight kg160

5. Twin milling head, nr.2 disk weight kg 25

6. Twin angle head, one for drilling and one for tapping weight kg 16

7. Angle head TA9101 with TAR1 head components weight kg 5

8. TAR1 special angle head milling on plastic weight kg 4

9. Twin angle head TA9013 for milling cast iron bodies weight kg 6,5

10. Twin spindle angle head for gear box milling weight kg 70

Fixed Centers Multi-Heads

3 Series of fixed Centre heads: MT, TC and TC3

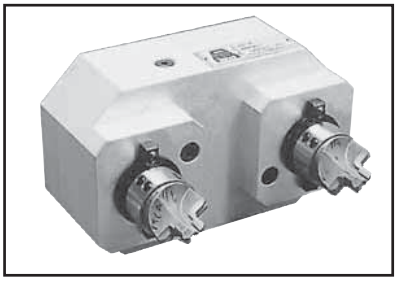

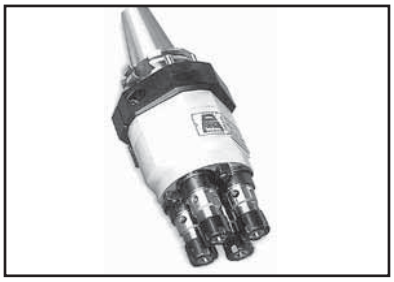

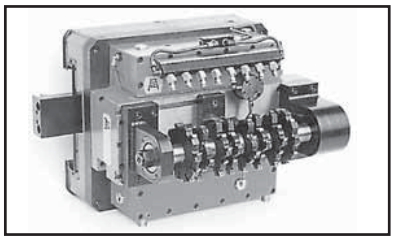

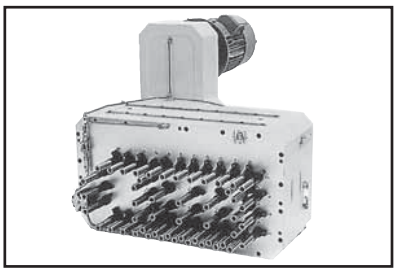

For higher precision, increased cutting and tool speeds.

MT Series

The MT system is for small centre distances and low torque requirements. MT units are normally compact and with 3 or 4 spindles weigh little and are permanent grease lubricated. Rotating components are hardened and ground, and are carried in anti-friction bearing enabling these head to run to to 10,000 rpm. In special cases MT head are built with large bodies and high numbers of spindles - even in excess of 20.

TC Series

Many TC system- medium capacity-heads have been supplied for drilling machines, unit head applications, special machines and machining centers. Outstanding is that this standardized series has become the industries Modular multi-head market leader. Head bodies of many sizes and form have been rationalized.

With a minimum centre distance of 16 mm holes patterns can be provided to any client need; spindles with all types of tool connection (DIN 6499 collets, DIN 55058, KOMET, ABS, DIN 1895 etc.) are carried in combinations of selected needle, angular contact ball and precision taper roller bearings to suit all tool types. Threading spindles with lead nuts give a minimum centers distance of 28 mm; additionally, fixed and movable columns with bush plates for tool guidance are available when required. When the tools or work demand, TC series head spindles can be run in excess of 10,000 rpm.

TC3 Series

The TC3 series is the embodiment of high technology; it is the system to high power machining with large units, on transfer or flexible matching system with automatic head change.

Massive, solid and weighing up to 900 kg, their application are limited only by the host machines; TC3 head bodies are usually of cast iron incorporating hardened and ground transmissions with positive, pressurized lubrication systems. TC3 head are frequently carry spindles with 100 mm bearing diameters - as do many types of machine tools. Machine tools are frequently integrated with O.M.G heads and the quality of work produced depends almost entirely on the head precision.

Special Heads

The O.M.G. technical office will gladly study such case and offer special solutions.

SECTION 3

Collets For Toolholding & Workholding

Collets For Toolholding & Workholding

Techleader precision collets and extensions are made from specially-developed, fine-grain, carbon steel to ensure maximum life to your collets and extensions. With the latest in computer-controlled and specialized machine tools and techniques, we maintain an edge ahead of our competition.

The latest in automated heat-treatment technology is employed to guarantee consistent accuracy in the hardening process. And, all our collets and extensions are 100% inspected to further ensure a prolonged working life and higher precision.

Techleader's range of collets is used to hold bar stock and cutting tools in many different industries - ranging from the automotive to the aerospace, and from the computer to the medical world.

With an experienced team of design engineers at our disposal, we can offer a comprehensive service for the design and manufacture of custom collets for both workholding and toolholding applications.

Through the years, Techleader has catalogued in excess of 40,000 different collet sizes and types. We have listed below some of the various machines we can supply collets for, which are not shown in this catalogue.

BECHLER
BOLEY
BROWN & SHARPE
CITIZEN
DAVENPORT
DECO
EMCO
DIN 6343
GILDERMEISTER
HERBERT
INDEX
JONES & SHIPMAN
MANURHIN
MAZAK
MORI SEIKI
NAKAMURA
NOMURA
OKUMA
PITTLER
RIKKEN
SCHAUBLIN
STAR
TORNOS/BECHLER
TRAUB
H.W. WARD
WICKMAN
& MANY MORE

TECHLEADER® TOOLING INC.

TG Collets

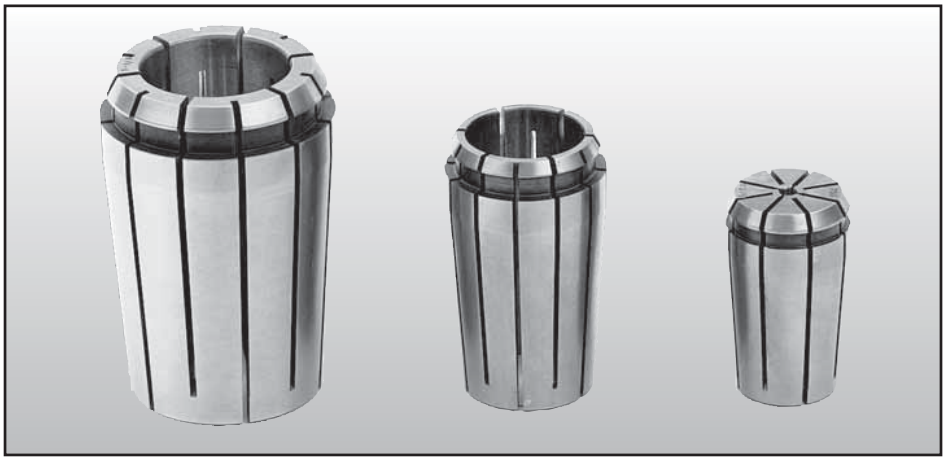

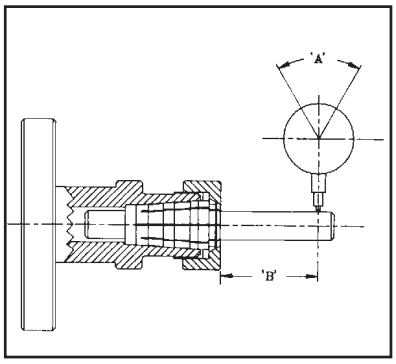

TG COLLET (High Precision) Standard Accuracy Chart

Bore Dia		'A'	'B'
OVER OVER	2.0 mm to 3.0 mm 0.079" to 0.118"	0.018 mm 0.0007"	10.0 mm 0.394"
OVER OVER	3.0 mm to 6.0 mm 0.118" to 0.236"	0.018 mm 0.0007"	16.0 mm 0.630"
OVER OVER	6.0 mm to 10.0 mm 0.236" to 0.394"	0.020 mm 0.0008"	25.5 mm 1.000"
OVER OVER	10.0 mm to 19.0 mm 0.394" to 0.748"	0.030 mm 0.001"	38.0 mm 1.500"
OVER OVER	19.0 mm to 25.4 mm 0.748" to 1.000"	0.030 mm 0.0012"	51.0 mm 2.000"
OVER OVER	25.4 mm to 32.0 mm 1.000" to 1.260"	0.040 mm 0.0013"	63.5 mm 2.500"
OVER OVER	32.0 mm to 50.8 mm 1.250" to 2.000"	0.040 mm 0.0013"	76.0 mm 3.000"

Precision ground and concentric with 0.0005" TIR at collet nose.

75TG COLLETS SETS

STANDARD PRECISION Order No.	NUMBER OF PIECES	SIZE
075-ST12SP	12	1/16" to 3/4"x16ths
075-ST17SP	17	1/16" to 3/4"x32nd
075-ST45SP	45	1/16" to 3/4"x64ths

75TG COLLETS SETS

HIGH PRECISION Order No.	NUMBER OF PIECES	SIZE
075-ST12HP	12	1/16" to 3/4"x16ths
075-ST17HP	17	1/16" to 3/4"x32nd
075-ST45HP	45	1/16" to 3/4"x64ths

75TG INCH COLLETS

L_1 Total Length: 1.811"A Max. Dia: 1.063"

HIGH PRECISION Order No.	STANDARD PRECISION Order No.	D1 Size (in)
075-003	–	3/64
075-004	–	1/16
075-005	–	5/64
075-006	075-006-SP	3/32
075-007	075-007-SP	7/64
075-008	075-008-SP	1/8
075-009	075-009-SP	9/64
075-010	075-010-SP	5/32
075-011	075-011-SP	11/64
075-012	075-012-SP	3/16
075-013	075-013-SP	13/64
075-014	075-014-SP	7/32
075-015	075-015-SP	15/64
075-016	075-016-SP	1/4
075-017	075-017-SP	17/64
075-018	075-018-SP	9/32
075-019	075-019-SP	19/64
075-020	075-020-SP	5/16
075-021	075-021-SP	21/64
075-022	075-022-SP	11/32
075-023	075-023-SP	23/64
075-024	075-024-SP	3/8
075-025	075-025-SP	25/64
075-026	075-026-SP	13/32
075-027	075-027-SP	27/64
075-028	075-028-SP	7/16
075-029	075-029-SP	29/64
075-030	075-030-SP	15/32
075-031	075-031-SP	31/64
075-032	075-032-SP	1/2
075-033	075-033-SP	33/64
075-034	075-034-SP	17/32
075-035	075-035-SP	35/64
075-036	075-036-SP	9/16
075-037	075-037-SP	37/64
075-038	075-038-SP	19/32
075-039	075-039-SP	39/64
075-040	075-040-SP	5/8
075-041	075-041-SP	41/64
075-042	075-042-SP	21/32
075-043	075-043-SP	43/64
075-044	075-044-SP	11/16
075-045	075-045-SP	45/64
075-046	075-046-SP	23/32
075-047	075-047-SP	47/64
075-048	075-048-SP	3/4

TECHLEADER® TOOLING INC.

TG Collets

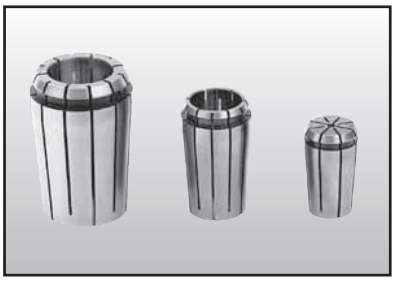

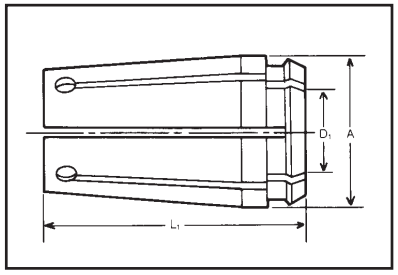

100TG INCH COLLETS

L_1 Total Length: 2.375" A Max. Dia: 1.379"

High Precision Order No.	Standard Precision Order No.	D_1 Size (in)
100-004	–	1/16
100-005	–	5/64
100-006	100-006-SP	3/32
100-007	100-007-SP	7/64
100-008	100-008-SP	1/8
100-009	100-009-SP	9/64
100-010	100-010-SP	5/32
100-011	100-011-SP	11/64
100-012	100-012-SP	3/16
100-013	100-013-SP	13/64
100-014	100-014-SP	7/32
100-015	100-015-SP	15/64
100-016	100-016-SP	1/4
100-017	100-017-SP	17/64
100-018	100-018-SP	9/32
100-019	100-019-SP	19/64
100-020	100-020-SP	5/16
100-021	100-021-SP	21/64
100-022	100-022-SP	11/32
100-023	100-023-SP	23/64
100-024	100-024-SP	3/8
100-025	100-025-SP	25/64
100-026	100-026-SP	13/32
100-027	100-027-SP	27/64
100-028	100-028-SP	7/16
100-029	100-029-SP	29/64
100-030	100-030-SP	15/32
100-031	100-031-SP	31/64
100-032	100-032-SP	1/2
100-033	100-033-SP	33/64
100-034	100-034-SP	17/32
100-035	100-035-SP	35/64
100-036	100-036-SP	9/16
100-037	100-037-SP	37/64
100-038	100-038-SP	19/32
100-039	100-039-SP	39/64
100-040	100-040-SP	5/8
100-041	100-041-SP	41/64
100-042	100-042-SP	21/32
100-043	100-043-SP	43/64
100-044	100-044-SP	11/16
100-045	100-045-SP	45/64
100-046	100-046-SP	23/32
100-047	100-047-SP	47/64
100-048	100-048-SP	3/4
100-049	100-049-SP	49/64
100-050	100-050-SP	25/32
100-051	100-051-SP	51/64
100-052	100-052-SP	13/16
100-053	100-053-SP	53/64
100-054	100-054-SP	27/32
100-055	100-055-SP	55/64
100-056	100-056-SP	7/8
100-057	100-057-SP	57/64
100-058	100-058-SP	29/32
100-059	100-059-SP	59/64
100-060	100-060-SP	15/16
100-061	100-061-SP	61/64
100-062	100-062-SP	31/32
100-063	100-063-SP	63/64
100-064	100-064-SP	1

100TG METRIC COLLETS

Order No.	D_1 Size
100-503	3mm (0.118")
100-504	4mm (0.1575")
100-505	5mm (0.197")
100-506	6mm (0.2362")
100-507	7mm (0.275")
100-508	8mm (0.3150")
100-509	9mm (0.354")
100-510	10mm (0.3937")
100-511	11mm (0.433")
100-512	12mm (0.4724")
100-513	13mm (0.512")
100-514	14mm (0.5512")
100-515	15mm (0.590")
100-516	16mm (0.6299")
100-517	17mm (0.669")
100-518	18mm (0.7087")
100-519	19mm (0.748")
100-520	20mm (0.7874")
100-521	21mm (0.826")
100-522	22mm (0.8661")
100-523	23mm (0.905")
100-524	24mm (0.9449")
100-525	25mm (0.9844")

Also available in 0.5 increments on request.

150TG INCH COLLETS

L_1 Total Length: 3" A Max. Dia: 2"

High Precision Order No.	Standard Precision Order No.	D_1 Size (in)
150-032	150-032-SP	1/2
150-033	150-033-SP	33/64
150-034	150-034-SP	17/32
150-035	150-035-SP	35/64
150-036	150-036-SP	9/16
150-037	150-037-SP	37/64
150-038	150-038-SP	19/32
150-039	150-039-SP	39/64
150-040	150-040-SP	5/8
150-041	150-041-SP	41/64
150-042	150-042-SP	21/32
150-043	150-043-SP	43/64
150-044	150-044-SP	11/16
150-045	150-045-SP	45/64
150-046	150-046-SP	23/32
150-047	150-047-SP	47/64
150-048	150-048-SP	3/4
150-049	150-049-SP	49/64
150-050	150-050-SP	25/32
150-051	150-051-SP	51/64
150-052	150-052-SP	13/16
150-053	150-053-SP	53/64
150-054	150-054-SP	27/32
150-055	150-055-SP	55/64
150-056	150-056-SP	7/8
150-057	150-057-SP	57/64
150-058	150-058-SP	29/32
150-059	150-059-SP	59/64
150-060	150-060-SP	15/16
150-061	150-061-SP	61/64
150-062	150-062-SP	31/32
150-063	150-063-SP	63/64
150-064	150-064-SP	1
150-065	150-065-SP	1-1/64
150-066	150-066-SP	1-1/32
150-067	150-067-SP	1-3/64
150-068	150-068-SP	1-1/16
150-069	150-069-SP	1-5/64
150-070	150-070-SP	1-3/32
150-071	150-071-SP	1-7/64
150-072	150-072-SP	1-1/8
150-073	150-073-SP	1-9/64
150-074	150-074-SP	1-5/32
150-075	150-075-SP	1-11/64
150-076	150-076-SP	1-3/16
150-077	150-077-SP	1-13/64
150-078	150-078-SP	1-7/32
150-079	150-079-SP	1-15/64
150-080	150-080-SP	1-1/4
150-081	150-081-SP	1-17/64
150-082	150-082-SP	1-9/32
150-083	150-083-SP	1-19/64
150-084	150-084-SP	1-5/6
150-085	150-085-SP	1-21/64
150-086	150-086-SP	1-11/32
150-087	150-087-SP	1-23/64
150-088	150-088-SP	1-3/8
150-089	150-089-SP	1-25/64
150-090	150-090-SP	1-13/32
150-091	150-091-SP	1-27/64
150-092	150-092-SP	1-7/16
150-093	150-093-SP	1-29/64
150-094	150-094-SP	1-15/32
150-095	150-095-SP	1-31/64
150-096	150-096-SP	1-1/2

100TG COLLETS SETS

STANDARD PRECISION Order No.	NUMBER OF PIECES	SIZE
100-ST8SP	8	1/8" to 1" x 8ths
100-ST11SP	11	3/8" to 1" x 16ths
100-ST15SP	15	1/8" to 1" x 16ths
100-ST21SP	21	3/8" to 1" x 32nds
100-ST30SP	30	3/32" to 1" x 32nds
100-ST41SP	41	3/8" to 1" x 64ths
100-ST59SP	59	3/32" to 1" x 64ths

100TG COLLETS SETS

HIGH PRECISION Order No.	NUMBER OF PIECES	SIZE
100-ST8HP	8	1/8" to 1" x 8ths
100-ST11HP	11	3/8" to 1" x 16ths
100-ST15HP	15	1/8" to 1" x 16ths
100-ST21HP	21	3/8" to 1" x 32nds
100-ST30HP	30	3/32" to 1" x 32nds
100-ST41HP	41	3/8" to 1" x 64ths
100-ST59HP	59	3/32" to 1" x 64ths

TECHLEADER® TOOLING INC.

TG Coolant Sealed Collets

Max Pressure 600 PSI

75TG INCH COLLETS

L_1 = Total Length: 1.811" A= Max. Dia: 1.063"

100TG INCH COLLETS

L_1 = Total Length: 2.375" A= Max. Dia: 1.379"

D_1 Size (in)	TG 75 Order No.	TG 100 Order No.	Metric (mm)	TG 75 Order No.	TG 100 Order No.
1/8	075-008-CS		3	075-503-CS	100-503-CS
9/64	075-009-CS		4	075-504-CS	100-504-CS
5/32	075-010-CS	100-010-CS	5	075-505-CS	100-505-CS
11/64	075-011-CS	100-011-CS	6	075-506-CS	100-506-CS
3/16	075-012-CS	100-012-CS	7	075-507-CS	100-507-CS
13/64	075-013-CS	100-013-CS	8	075-508-CS	100-508-CS
7/32	075-014-CS	100-014-CS	9	075-509-CS	100-509-CS
15/64	075-015-CS	100-015-CS	10	075-510-CS	100-510-CS
1/4	075-016-CS	100-016-CS	11	075-511-CS	100-511-CS
17/64	075-017-CS	100-017-CS	12	075-512-CS	100-512-CS
9/32	075-018-CS	100-018-CS	13	075-513-CS	100-513-CS
19/64	075-019-CS	100-019-CS	14	075-514-CS	100-514-CS
5/16	075-020-CS	100-020-CS	15	075-515-CS	100-515-CS
21/64	075-021-CS	100-021-CS	16	075-516-CS	100-516-CS
11/32	075-022-CS	100-022-CS	17	075-517-CS	100-517-CS
23/64	075-023-CS	100-023-CS	18	075-518-CS	100-518-CS
3/8	075-024-CS	100-024-CS	19	075-519-CS	100-519-CS
25/64	075-025-CS	100-025-CS	20	075-520-CS	100-520-CS
13/32	075-026-CS	100-026-CS	21	-	100-521-CS
27/64	075-027-CS	100-027-CS	22	-	100-522-CS
7/16	075-028-CS	100-028-CS	23	-	100-523-CS
29/64	075-029-CS	100-029-CS	24	-	100-524-CS
15/32	075-030-CS	100-030-CS	25	-	100-525-CS
31/64	075-031-CS	100-031-CS			
1/2	075-032-CS	100-032-CS			
33/64	075-033-CS	100-033-CS			
17/32	075-034-CS	100-034-CS			
35/64	075-035-CS	100-035-CS			
9/16	075-036-CS	100-036-CS			
37/64	075-037-CS	100-037-CS			
19/32	075-038-CS	100-038-CS			
39/64	075-039-CS	100-039-CS			
5/8	075-040-CS	100-040-CS			
41/64	075-041-CS	100-041-CS			
21/32	075-042-CS	100-042-CS			
43/64	075-043-CS	100-043-CS			
11/16	075-044-CS	100-044-CS			
45/64	075-045-CS	100-045-CS			
23/32	075-046-CS	100-046-CS			
47/64	075-047-CS	100-047-CS			
3/4	075-048-CS	100-048-CS			
49/64	–	100-049-CS			
25/32	–	100-050-CS			
51/64	–	100-051-CS			
13/16	–	100-052-CS			
53/64	–	100-053-CS			
27/32	–	100-054-CS			
55/64	–	100-055-CS			
7/8	–	100-056-CS			
57/64	–	100-057-CS			
29/32	–	100-058-CS			
59/64	–	100-059-CS			
15/16	–	100-060-CS			
61/64	–	100-061-CS			
31/32	–	100-062-CS			
63/64	–	100-063-CS			
1	–	100-064-CS			

TECHLEADER® TOOLING INC.

Double Angle Collets & Extensions

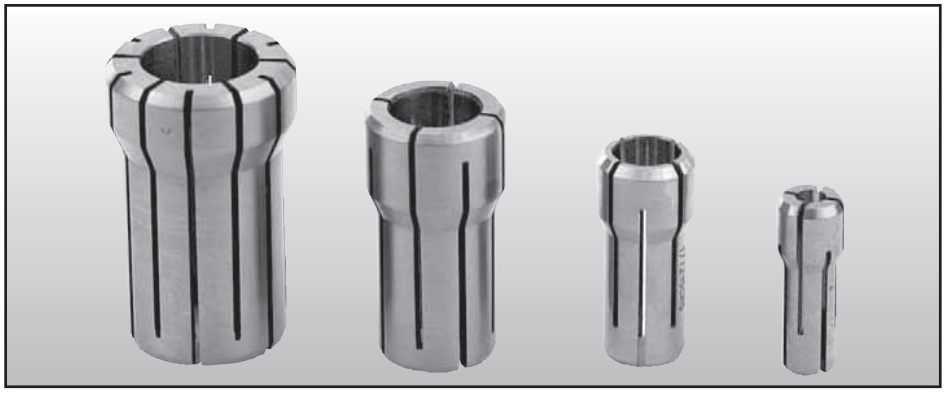

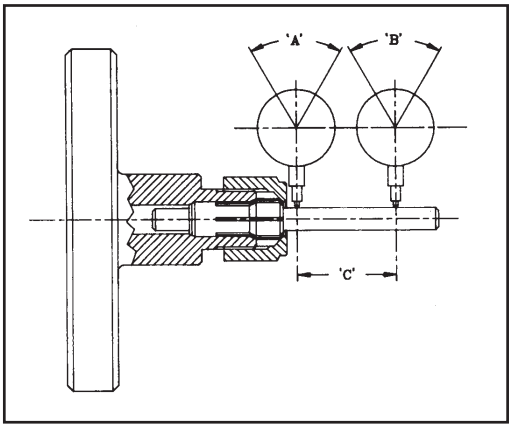

DOUBLE ANGLE COLLET
Standard Precision Accuracy Chart

Bore Dia		'A'	'B'	'C'
(mm) (in.)	1.0 0.39	0.025 0.0008	0.040 0.0015	12.0 0.472
Over (mm) Over (in.)	1.0 to 3.0 0.39-0.118	0.025 0.0008	0.050 0.002	25.0 0.984
Over (mm) Over (in.)	3.0 to CAP. 0.118-CAP.	0.013 0.0005	0.025 0.001	25.0 0.984

Precision ground and concentric with 0.0005" TIR at collet nose.

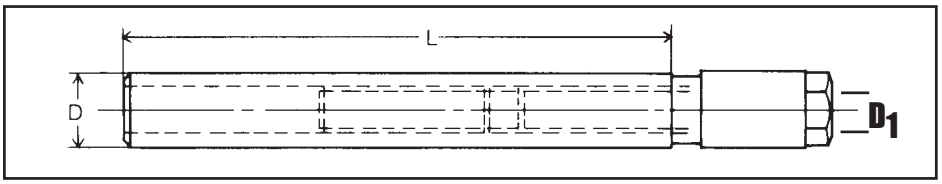

Double Angle Collet Extensions

To ensure long life of accuracy and durability, the Techleader Double Angle Tool Extensions are manufactured utilizing the latest technology of heat treat and processing, combined with high quality carbon steel. The product is hardened and tempered with a high degree of accuracy outlasting our competitors and making us No. 1 in quality and precision.

EXTENSIONS					NUTS
Order No.	Range D_1 (in)	Collet	D (in)	L (in)	Order No.
030-000	0.031 - 0.250	300DA	1/2	5-1/2	030-000-NI
030-000S	0.031 - 0.250	300DA	1/2	3.60"	030-000-NI
030-00IS	0.031 - 0.250	300DA	5/8	3.75"	030-000-NI
020-000	0.047 - 0.375	200DA	3/4	5-1/2	020-000-NI
020-000S	0.047 - 0.375	200DA	5/8	3.75"	020-000-NI
020-00IS	0.047 - 0.375	200DA	3/4	3.80"	020-000-NI
010-000	0.047 - 0.562	100DA	1	5-1/2	010-000-NI
010-000S	0.047 - 0.562	100DA	1	4.00"	010-000-NI
018-000	0.047 - 0.750	180DA	1-1/4	5-1/2	018-000-NI
018-001	0.047 - 0.750	180DA	1	6.20"	018-000-NI

TECHLEADER® TOOLING INC.

Double Angle Collets

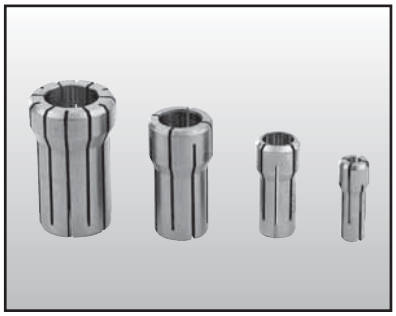

300DA COLLETS

L_1 Total Length: 1.000" A Max. Dia: 0.375"

HIGH PRECISION Order No.	STANDARD PRECISION Order No.	D_1 Size Order No.
030-002	–	1/32"
030-003	–	3/64"
030-004	030-004-SP	1/16"
030-005	030-005-SP	5/64"
030-006	030-006-SP	3/32"
030-007	030-007-SP	7/64"
030-008	030-008-SP	1/8"
030-009	030-009-SP	9/64"
030-010	030-010-SP	5/32"
030-011	030-011-SP	11/64"
030-012	030-012-SP	3/16"
030-013	030-013-SP	13/64"'
030-014	030-014-SP	7/32"
030-015	030-015-SP	15/64"
030-016	030-016-SP	1/4"

200DA COLLETS

L_1 Total Length: 1.188" A Max. Dia: 0.531"

HIGH PRECISION Order No.	STANDARD PRECISION Order No.	D_1 Size Order No.
020-003	–	3/64"
020-004	020-004-SP	1/16"
020-005	020-005-SP	5/64"
020-006	020-006-SP	3/32"
020-007	020-007-SP	7/64"
020-008	020-008-SP	1/8"
020-009	020-009-SP	9/64"
020-010	020-010-SP	5/32"
020-011	020-011-SP	11/64"
020-012	020-012-SP	3/16"
020-013	020-013-SP	13/64"
020-014	020-014-SP	7/32"
020-015	020-015-SP	15/64"
020-016	020-016-SP	1/4"
020-017	020-017-SP	17/64"
020-018	020-018-SP	9/32"
020-019	020-019-SP	19/64"
020-020	020-020-SP	5/16"
020-021	020-021-SP	21/64"
020-022	020-022-SP	11/32"
020-023	020-023-SP	23/64"
020-024	020-024-SP	3/8"

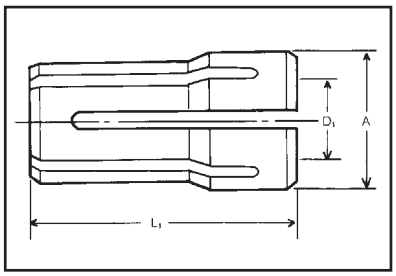

300DA COLLETS SETS

STANDARD PRECISION Order No.	NUMBER OF PIECES	SIZE
030-ST7SP	7	1/16" to 1/4" x 32nds
030-ST9SP	9	1/8" to 1/4" x 64ths
030-ST13SP	13	1/16" to 1/4" x 64ths
030-ST14SP	14	3/64" to 1/4" x 64ths

200DA COLLETS SETS

STANDARD PRECISION Order No.	NUMBER OF PIECES	SIZE
020-ST9SP	9	1/8" to 3/8" x 32nds
020-ST11SP	11	1/16" to 3/8" x 32nds
020-ST17SP	17	1/8" to 3/8" x 64ths
020-ST21SP	21	1/16" to 3/8" x 64ths

Double Angle Collets

Metric-Sizes also available on request

300DA COLLETS SETS

HIGH PRECISION Order No.	NUMBER OF PIECES	SIZE
030-ST7HP	7	1/16" to 1/4" x 32nds
030-ST9HP	9	1/8" to 1/4" x 64ths
030-ST13HP	13	1/16" to 1/4" x 64ths
030-ST14HP	14	3/64" to 1/4" x 64ths

200DA COLLETS SETS

HIGH PRECISION Order No.	NUMBER OF PIECES	SIZE
020-ST9HP	9	1/8" to 3/8" x 32nds
020-ST11HP	11	1/16" to 3/8" x 32nds
020-ST17HP	17	1/8" to 3/8" x 64ths
020-ST21HP	21	1/16" to 3/8" x 64ths

TECHLEADER® TOOLING INC.

Double Angle Collets

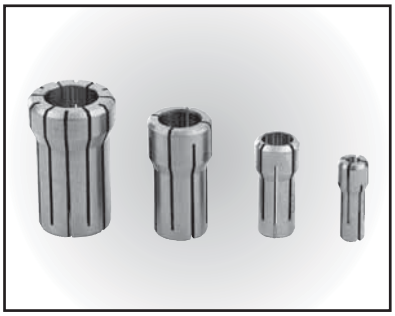

100DA COLLETS

L_1 Total Length: 1.438"
A Max. Dia: 0.769"

HIGH PRECISION Order No.	STANDARD PRECISION Order No.	D_1 Size Order No.
010-003	–	3/64"
010-004	010-004-SP	1/16"
010-005	010-005-SP	5/64"
010-006	010-006-SP	3/32"
010-007	010-007-SP	7/64"
010-008	010-008-SP	1/8"
010-009	010-009-SP	9/64"
010-010	010-010-SP	5/32"
010-011	010-011-SP	11/64"
010-012	010-012-SP	3/16"
010-013	010-013-SP	13/64"
010-014	010-014-SP	7/32"
010-015	010-015-SP	15/64"
010-016	010-016-SP	1/4"
010-017	010-017-SP	17/64"
010-018	010-018-SP	9/32"
010-019	010-019-SP	19/64"
010-020	010-020-SP	5/16"
010-021	010-021-SP	21/64"
010-022	010-022-SP	11/32"
010-023	010-023-SP	23/64"
010-024	010-024-SP	3/8"
010-025	010-025-SP	25/64"
010-026	010-026-SP	13/32"
010-027	010-027-SP	27/64"
010-028	010-028-SP	7/16"
010-029	010-029-SP	29/64"
010-030	010-030-SP	15/32"
010-031	010-031-SP	31/64"
010-032	010-032-SP	1/2"
010-033	010-033-SP	33/64"
010-034	010-034-SP	17/32"
010-035	010-035-SP	35/64"
010-036	010-036-SP	9/16"

100DA COLLETS SETS

STANDARD PRECISION Order No.	NUMBER OF PIECES	SIZE
010-ST8SP	8	1/8" to 9/16" x 16ths
010-ST11SP	11	1/4" to 9/16" x 32nds
010-ST15SP	15	1/8" to 9/16" x 32nds
010-ST17SP	17	1/16" to 9/16" x 32nds
010-ST21SP	21	1/4" to 9/16" x 64ths
010-ST29SP	29	3/8" to 9/16" x 64ths
010-ST33SP	33	1/16" to 9/16" x 64ths

100DA COLLETS SETS

HIGH PRECISION Order No.	NUMBER OF PIECES	SIZE
010-ST8HP	8	1/8" to 9/16" x 16ths
010-ST11HP	11	1/4" to 9/16" x 32nds
010-ST15HP	15	1/8" to 9/16" x 32nds
010-ST17HP	17	1/16" to 9/16" x 32nds
010-ST21HP	21	1/4" to 9/16" x 64ths
010-ST29HP	29	3/8" to 9/16" x 64ths
010-ST33HP	33	1/16" to 9/16" x 64ths

180DA COLLETS

L_1 Total Length: 1.625"
A Max. Dia: 1.035"

HIGH PRECISION Order No.	STANDARD PRECISION Order No.	D_1 Size Order No.
018-003	–	3/64"
018-004	018-004-SP	1/16"
018-005	018-005-SP	5/64"
018-006	018-006-SP	3/32"
018-007	018-007-SP	7/64"
018-008	018-008-SP	1/8"
018-009	018-009-SP	9/64"
018-010	018-010-SP	5/32"
018-011	018-011-SP	11/64"
018-012	018-012-SP	3/16"
018-013	018-013-SP	13/64"
018-014	018-014-SP	7/32"
018-015	018-015-SP	15/64"
018-016	018-016-SP	1/4"
018-017	018-017-SP	17/64"
018-018	018-018-SP	9/32"
018-019	018-019-SP	19/64"
018-020	018-020-SP	5/16"
018-021	018-021-SP	21/64"
018-022	018-022-SP	11/32"
018-023	018-023-SP	23/64"
018-024	018-024-SP	3/8"
018-025	018-025-SP	25/64"
018-026	018-026-SP	13/32"
018-027	018-027-SP	27/64"
018-028	018-028-SP	7/16"
018-029	018-029-SP	29/64"
018-030	018-030-SP	15/32"
018-031	018-031-SP	31/64"
018-032	018-032-SP	1/2"
018-033	018-033-SP	33/64"
018-034	018-034-SP	17/32"
018-035	018-035-SP	35/64"
018-036	018-036-SP	9/16"
018-037	018-037-SP	37/64"
018-038	018-038-SP	19/32"
018-039	018-039-SP	39/64"
018-040	018-040-SP	5/8"
018-041	018-041-SP	41/64"
018-042	018-042-SP	21/32"
018-043	018-043-SP	43/64"
018-044	018-044-SP	11/16"
018-045	018-045-SP	45/64"
018-046	018-046-SP	23/32"
018-047	018-047-SP	47/64"
018-048	018-048-SP	3/4"

180DA COLLETS SETS

STANDARD PRECISION Order No.	NUMBER OF PIECES	SIZE
018-ST9SP	9	1/4" to 3/4" x 16ths
018-ST17SP	17	1/4" to 3/4" x 32nds
018-ST21SP	21	1/8" to 3/4" x 32nds
018-ST33SP	33	1/4" to 3/4" x 64ths
018-ST41SP	41	1/8" to 3/4" x 64ths

180DA COLLETS SETS

HIGH PRECISION Order No.	NUMBER OF PIECES	SIZE
018-ST9HP	9	1/4" to 3/4" x 16ths
018-ST17HP	17	1/4" to 3/4" x 32nds
018-ST21HP	21	1/8" to 3/4" x 32nds
018-ST33HP	33	1/4" to 3/4" x 64ths
018-ST41HP	41	1/8" to 3/4" x 64ths

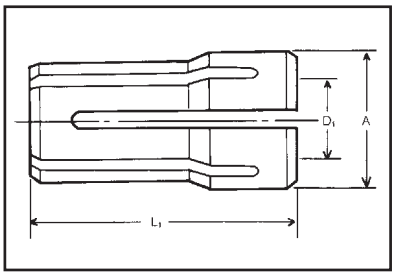

Double Angle Collets

Metric sizes also available on request

TECHLEADER® TOOLING INC.

ECX (ER) Super Flex
Standard & Ultra Precision Collets

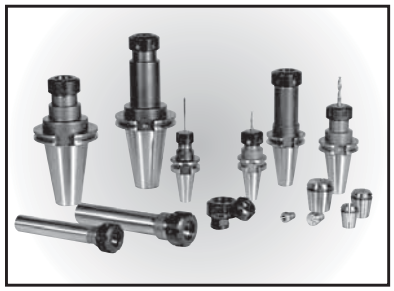

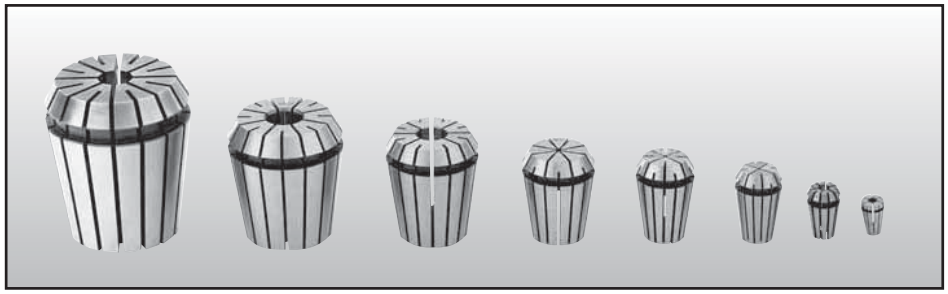

See pages 1-10 and 1-15 for Collet Chucks and Extensions

Our ECX is equivalent to the following competitors' styles: DR, ER, ESX & RD

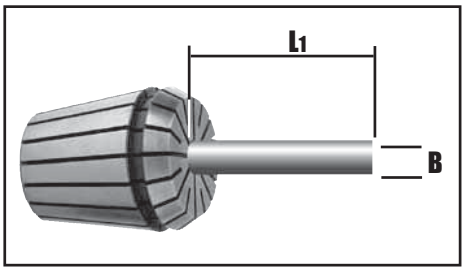

Concentricity details for Collets to DIN6499 (ECX/ER) are checked to the test method described below.

BORE SIZE B	L1 mm	ECX/ER 8 & 50		ECX/ER 11, 16, 20 & 25, 32 & 40	
		Metric	Inch	Metric	Inch
over 1.0 to 1.6	6	0.015 SP / 0.010 UP	0.0006" SP / 0.0004" UP	0.015 SP / 0.006 UP	0.0006" SP / 0.00025" UP
1.6 3.0	10				
3.0 7.0	16				
7.0 10.0	25				
10.0 18.0	40	0.020 SP / 0.015 UP	0.0008" SP / 0.0006" UP	0.020 SP / 0.006 UP	0.0008" SP / 0.00025"UP
18.0 26.0	50				
26.0 34.0	60	0.020 SP/UP	0.0008" SP/UP	0.020 SP / 0.015 UP	0.0008" SP / 0.0006"UP

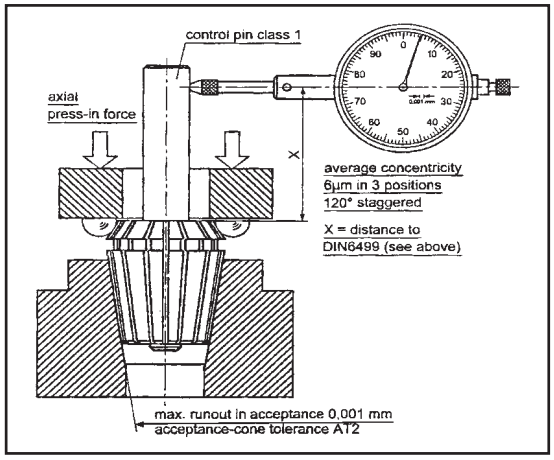

SP = Standard Precision

UP = Ultra Precision
(Made in Germany)

For applications which require highest concentricity, it is absolutely necessary to pay attention to the complete system (machine spindle, collet acceptance, nut, collet and cutting tool).

TECHLEADER® TOOLING INC.

ECX (ER) Super Flex
Standard & Ultra Precision Collets

ECX/ER 8 Collets

L_1 = Total Length: 0.531" (13.5 mm) A = Max. Dia: 0.355" (8.5 mm)

CLAMPING RANGE		STANDARD PRECISION	ULTRA PRECISION	INCH SERIES	
Inches	Metric (mm)	Order No.	Part No.	Order No.	Size
0.020 - 0.039	0.5 - 1.0	008-040-SP	008-040	–	–
0.039 - 0.059	1.0 - 1.5	008-060-SP	008-060	–	–
0.059 - 0.079	1.5 - 2.0	008-080-SP	008-080	–	–
0.079 - 0.098	2.0 - 2.5	008-100-SP	008-100	–	–
0.098 - 0.118	2.5 - 3.0	008-120-SP	008-120	–	–
0.118 - 0.138	3.0 - 3.5	008-140-SP	008-140	–	–
0.138 - 0.157	3.5 - 4.0	008-160-SP	008-160	–	–
0.157 - 0.177	4.0 - 4.5	008-180-SP	008-180	–	–
0.177 - 0.197	4.5 - 5.0	008-200-SP	008-200	–	–

Collet Sets

Order No.	No. of Pieces	Device Type	Range
008-ST9SP	9 PC	ECX 8 SP Collet Set	0.5 mm to 5 mm By 0.5 mm Incr.
008-ST9	9 PC	ECX 8 UP Collet Set	0.5 mm to 5 mm By 0.5 mm Incr.

ECX/ER 11 Collets

L_1 = Total Length: 0.709" (18 mm) A = Max. Dia: 0.453" (11.5 mm)

CLAMPING RANGE		STANDARD PRECISION	ULTRA PRECISION	INCH SERIES	
Inches	Metric (mm)	Order No.	Order No.	Part No.	Size
0.020 - 0.039	0.5 - 1.0	011-040-SP	011-040	011-008-I	1/8"
0.039 - 0.059	1.0 - 1.5	011-060-SP	011-060	011-012-I	3/16"
0.059 - 0.079	1.5 - 2.0	011-080-SP	011-080	011-016-I	1/4"
0.079 - 0.098	2.0 - 2.5	011-100-SP	011-100	–	–
0.098 - 0.118	2.5 - 3.0	011-120-SP	011-120	–	–
0.118 - 0.138	3.0 - 3.5	011-140-SP	011-140	–	–
0.138 - 0.157	3.5 - 4.0	011-160-SP	011-160	–	–
0.157 - 0.177	4.0 - 4.5	011-180-SP	011-180	–	–
0.177 - 0.197	4.5 - 5.0	011-200-SP	011-200	–	–
0.197 - 0.217	5.0 - 5.5	011-220-SP	011-220	–	–
0.217 - 0.236	5.5 - 6.0	011-240-SP	011-240	–	–
0.236 - 0.256	6.0 - 6.5	011-260-SP	011-260	–	–
0.256 - 0.276	6.5 - 7.0	011-280-SP	011-280	–	–

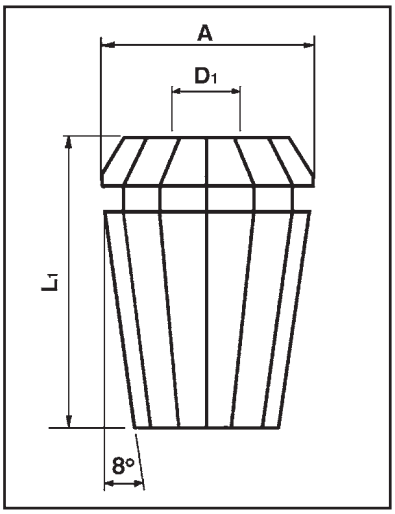

Collet Sets

Order No.	No. of Pieces	Device Type	Range
011-ST13SP	13 PC	ECX 11 SP Collet Set	1 mm to 7 mm By 0.5 mm Incr.
011-ST13	13 PC	ECX 11 UP Collet Set	1 mm to 7 mm By 0.5 mm Incr.

TECHLEADER® TOOLING INC.

ECX (ER) Super Flex
Standard & Ultra Precision Collets

ECX/ER 12 Collets

L_1 = Total Length: 0.767" (19.5 mm) A = Max. Dia: 0.472" (12 mm)

CLAMPING RANGE		STANDARD PRECISION	ULTRA PRECISION	INCH SERIES	
Inches	Metric (mm)	Order No.	Order No.	Order No.	Size
0.020 - 0.039	0.5 - 1.0	012-040-SP	012-040	–	–
0.039 - 0.059	1.0 - 1.5	012-060-SP	012-060	–	–
0.059 - 0.079	1.5 - 2.0	012-080-SP	012-080	–	–
0.079 - 0.0984	2.0 - 2.5	012-100-SP	012-100	–	–
0.0984 - 0.118	2.5 - 3.0	012-120-SP	012-120	–	–
0.118 - 0.158	3.0 - 4.0	012-160-SP	012-160	–	–
0.158 - 0.197	4.0 - 5.0	012-200-SP	012-200	–	–
0.197 - 0.236	5.0 - 6.0	012-240-SP	012-240	–	–
0.236 - 0.276	6.0 - 7.0	012-280-SP	012-280	–	–

ECX/ER 16 Collets

L_1 = Total Length: 1.063" (27 mm) A = Max. Dia: 0.669" (17 mm)

CLAMPING RANGE		STANDARD PRECISION	ULTRA PRECISION	INCH SERIES	
Inches	Metric (mm)	Order No.	Order No.	Order No.	Size
0.020 - 0.039	0.5 - 1.0	016-040-SP	016-040	016-004-I	1/16"
0.039 - 0.059	1.0 - 1.5	–	016-060	016-008-I	1/8"
SP 0.039 - 0.079/ **UP** 0.059 - 0.079	**SP** 1.0 - 2.0 / **UP** 1.5 - 2.0	016-080-SP	016-080	016-012-I	3/16"
0.079 - 0.118	2.0 - 3.0	016-120-SP	016-120	016-016-I	1/4"
0.118 - 0.158	3.0 - 4.0	016-160-SP	016-160	016-020-I	5/16"
0.158 - 0.197	4.5 - 5.0	016-200-SP	016-200	016-024-I	3/8"
0.197 - 0.236	5.0 - 6.0	016-240-SP	016-240	–	–
0.236 - 0.276	6.0 - 7.0	016-280-SP	016-280	–	–
0.276 - 0.315	7.0 - 8.0	016-320-SP	016-320	–	–
0.315 - 0.354	8.0 - 9.0	016-360-SP	016-360	–	–
0.354 - 0.394	9.0 - 10.0	016-400-SP	016-400	–	–

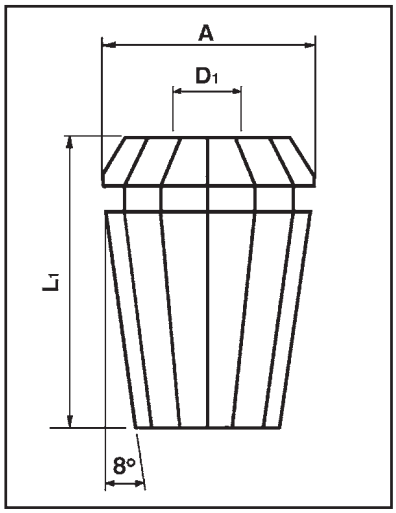

Collet Sets

Order No.	No. of Pieces	Device Type	Range
016-ST10SP	10 PC	ECX 16 SP Collet Set	1 mm to 10 mm By 1 mm Incr.
016-ST11	11 PC	ECX 16 UP Collet Set	1 mm to 10 mm By 0.5 mm Incr. from 1 mm to 2 mm By 1 mm Incr. from 3 mm to 10 mm

TECHLEADER® TOOLING INC.

ECX (ER) Super Flex
Standard & Ultra Precision Collets

ECX/ER 20 Collets

L_1 = Total Length: 1.220" (31 mm) **A = Max. Dia: 0.826" (21 mm)**

CLAMPING RANGE		STANDARD PRECISION	ULTRA PRECISION	INCH SERIES	
Inches	Metric (mm)	Order No.	Order No.	Order No.	Size
0.020 - 0.039	0.5 - 1.0	020-040-SP	020-040	020-008-I	1/8
0.039 - 0.059	1.0 - 1.5	–	020-060	020-012-I	3/16
SP 0.039 - 0.079/ **UP** 0.059 - 0.079	**SP** 1.0 - 2.0 / **UP** 1.5 - 2.0	020-080-SP	020-080	020-016-I	1/4
0.079 - 0.118	2.0 - 3.0	020-120-SP	020-120	020-020-I	5/16
0.118 - 0.158	3.0 - 4.0	020-160-SP	020-160	020-024-I	3/8
0.158 - 0.197	4.0 - 5.0	020-200-SP	020-200	020-028-I	7/16
0.197 - 0.236	5.0 - 6.0	020-240-SP	020-240	020-032-I	1/2
0.236 - 0.275	6.0 - 7.0	020-280-SP	020-280	–	–
0.275 - 0.315	7.0 - 8.0	020-320-SP	020-320	–	–
0.315 - 0.354	8.0 - 9.0	020-360-SP	020-360	–	–
0.354 - 0.393	9.0 - 10.0	020-400-SP	020-400	–	–
0.393 - 0.433	10.0 - 11.0	020-440-SP	020-440	–	–
0.433 - 0.472	11.0 - 12.0	020-480-SP	020-480	–	–
0.472 - 0.512	12.0 - 13.0	020-520-SP	020-520	–	–

Collet Sets

Order No.	No. of Pieces	Device Type	Range	
020-ST13SP	13 PC	ECX 20 SP Collet Set	1 mm to 13 mm	By 1 mm Incr.
020-ST14	14 PC	ECX 20 UP Collet Set	1 mm to 13 mm	By 0.5 mm Incr. from 1 mm to 2 mm By 1 mm Incr. from 3 mm to 13 mm

ECX/ER 25 Collets

L_1 = Total Length: 1.338" (34 mm) **A = Max. Dia: 1.023" (26 mm)**

CLAMPING RANGE		STANDARD PRECISION	ULTRA PRECISION	INCH SERIES	
Inches	Metric (mm)	Order No.	Order No.	Order No.	Size
0.020 - 0.039	0.5 - 1.0	025-040-SP	025-040	025-008-I	1/8
0.039 - 0.059	1.0 - 1.5	–	025-060	025-012-I	3/16
SP 0.039 - 0.079/ **UP** 0.059 - 0.079	**SP** 1.0 - 2.0 / **UP** 1.5 - 2.0	025-080-SP	025-080	025-016-I	1/4
0.079 - 0.118	2.0 - 3.0	025-120-SP	025-120	025-020-I	5/16
0.118 - 0.158	3.0 - 4.0	025-160-SP	025-160	025-024-I	3/8
0.158 - 0.197	4.0 - 5.0	025-200-SP	025-200	025-028-I	7/16
0.197 - 0.236	5.0 - 6.0	025-240-SP	025-240	025-032-I	1/2
0.236 - 0.275	6.0 - 7.0	025-280-SP	025-280	025-036-I	9/16
0.275 - 0.315	7.0 - 8.0	025-320-SP	025-320	025-040-I	5/8
0.315 - 0.354	8.0 - 9.0	025-360-SP	025-360	–	–
0.354 - 0.393	9.0 - 10.0	025-400-SP	025-400	–	–
0.393 - 0.433	10.0 - 11.0	025-440-SP	025-440	–	–
0.433 - 0.472	11.0 - 12.0	025-480-SP	025-480	–	–
0.472 - 0.512	12.0 - 13.0	025-520-SP	025-520	–	–
0.512 - 0.551	13.0 - 14.0	025-560-SP	025-560	–	–
0.551 - 0.590	14.0 - 15.0	025-600-SP	025-600	–	–
0.590 - 0.629	15.0 - 16.0	025-640-SP	025-640	–	–

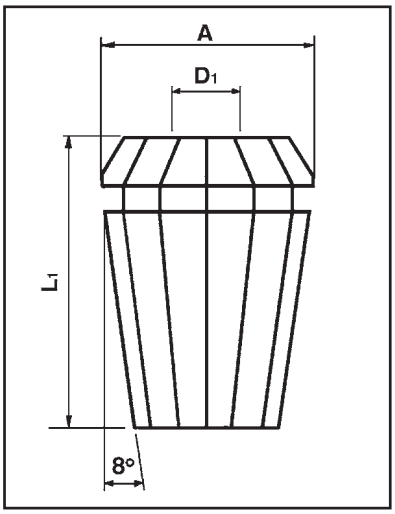

Collet Sets

Order No.	No. of Pieces	Device Type	Range	
025-ST16SP	16 PC	ECX 25 SP Collet Set	1 mm to 16 mm	By 1 mm Incr.
025-ST17	17 PC	ECX 25 UP Collet Set	1 mm to 16 mm	By 0.5 mm Incr. from 1 mm to 2 mm By 1 mm Incr. from 3 mm to 16 mm

TECHLEADER® TOOLING INC.

ECX (ER) Super Flex
Standard & Ultra Precision Collets

ECX/ER 32 Collets

L_1 = Total Length: 1.575" (40 mm) **A = Max. Dia: 1.299" (33 mm)**

CLAMPING RANGE		STANDARD PRECISION	ULTRA PRECISION	INCH SERIES	
Inches	Metric (mm)	Order No.	Order No.	Order No.	Size
0.059 - 0.079	1.5 - 2.0	–	032-080	032-008-I	1/8
0.079 - 0.098	2.0 - 2.5	–	032-100	032-012-I	3/16
0.079 - 0.118	2.0 - 3.0	032-120-SP	032-120	032-016-I	1/4
0.118 - 0.158	3.0 - 4.0	032-160-SP	032-160	032-020-I	5/16
0.158 - 0.197	4.0 - 5.0	032-200-SP	032-200	032-024-I	3/8
0.197 - 0.236	5.0 - 6.0	032-240-SP	032-240	032-028-I	7/16
0.236 - 0.275	6.0 - 7.0	032-280-SP	032-280	032-032-I	1/2
0.275 - 0.315	7.0 - 8.0	032-320-SP	032-320	032-036-I	9/16
0.315 - 0.354	8.0 - 9.0	032-360-SP	032-360	032-040-I	5/8
0.354 - 0.393	9.0 - 10.0	032-400-SP	032-400	032-044-I	11/16
0.393 - 0.433	10.0 - 11.0	032-440-SP	032-440	032-048-I	3/4
0.433 - 0.472	11.0 - 12.0	032-480-SP	032-480	–	–
0.472 - 0.512	12.0 - 13.0	032-520-SP	032-520	–	–
0.512 - 0.551	13.0 - 14.0	032-560-SP	032-560	–	–
0.551 - 0.590	14.0 - 15.0	032-600-SP	032-600	–	–
0.590 - 0.629	15.0 - 16.0	032-640-SP	032-640	–	–
0.629 - 0.669	16.0 - 17.0	032-680-SP	032-680	–	–
0.669 - 0.708	17.0 - 18.0	032-720-SP	032-720	–	–
0.708 - 0.748	18.0 - 19.0	032-760-SP	032-760	–	–
0.748 - 0.787	19.0 - 20.0	032-800-SP	032-800	–	–

Collet Sets

Order No.	No. of Pieces	Device Type	Range
032-ST18SP	18 PC	ECX 32 SP Collet Set	2 mm to 20 mm By 1 mm Incr.
032-ST18	18 PC	ECX 32 UP Collet Set	2 mm to 20 mm By 1 mm Incr.

ECX/ER 40 Collets

L_1 = Total Length: 1.811" (46 mm) **A = Max. Dia: 1.614" (41 mm)**

CLAMPING RANGE		STANDARD PRECISION	ULTRA PRECISION	INCH SERIES	
Inches	Metric	Order No.	Order No.	Order No.	Size
0.118 - 0.158	3.0 - 4.0	040-160-SP	040-160	040-008-I	1/8
0.158 - 0.197	4.0 - 5.0	040-200-SP	040-200	040-012-I	3/16
0.197 - 0.236	5.0 - 6.0	040-240-SP	040-240	040-016-I	1/4
0.236 - 0.275	6.0 - 7.0	040-280-SP	040-280	040-020-I	5/16
0.275 - 0.315	7.0 - 8.0	040-320-SP	040-320	040-024-I	3/8
0.315 - 0.354	8.0 - 9.0	040-360-SP	040-360	040-028-I	7/16
0.354 - 0.393	9.0 - 10.0	040-400-SP	040-400	040-032-I	1/2
0.393 - 0.433	10.0 - 11.0	040-440-SP	040-440	040-036-I	9/16
0.433 - 0.472	11.0 - 12.0	040-480-SP	040-480	040-040-I	5/8
0.472 - 0.512	12.0 - 13.0	040-520-SP	040-520	040-048-I	3/4
0.512 - 0.551	13.0 - 14.0	040-560-SP	040-560	040-056-I	7/8
0.551 - 0.590	14.0 - 15.0	040-600-SP	040-600	040-064-I	1
0.590 - 0.629	15.0 - 16.0	040-640-SP	040-640	–	–
0.629 - 0.669	16.0 - 17.0	040-680-SP	040-680	–	–
0.669 - 0.708	17.0 - 18.0	040-720-SP	040-720	–	–
0.708 - 0.748	18.0 - 19.0	040-760-SP	040-760	–	–
0.748 - 0.787	19.0 - 20.0	040-800-SP	040-800	–	–
0.787 - 0.827	20.0 - 21.0	040-840-SP	040-840	–	–
0.827 - 0.866	21.0 - 22.0	040-880-SP	040-880	–	–
0.866 - 0.906	22.0 - 23.0	040-920-SP	040-920	–	–
0.906 - 0.945	23.0 - 24.0	040-960-SP	040-960	–	–
0.945 - 0.984	24.0 - 25.0	040-1000SP	040-1000	–	–
0.984 - 1.024	25.0 - 26.0	040-1040SP	040-1040	–	–

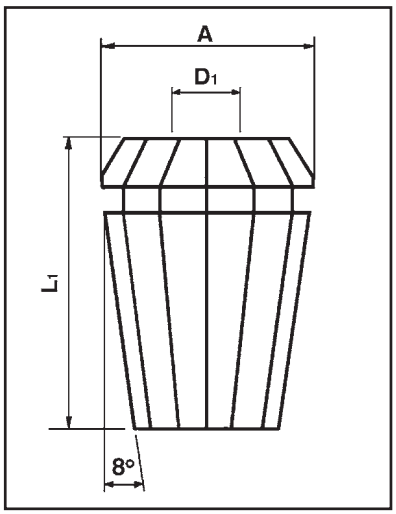

Collet Sets

Order No.	No. of Pieces	Device Type	Range
040-ST23SP	23 PC	ECX 40 SP Collet Set	4 mm to 26 mm By 1 mm Incr.
040-ST23	23 PC	ECX 40 UP Collet Set	4 mm to 26 mm By 1 mm Incr.

TECHLEADER® TOOLING INC.

ECX (ER) Super Flex
Standard & Ultra Precision Collets

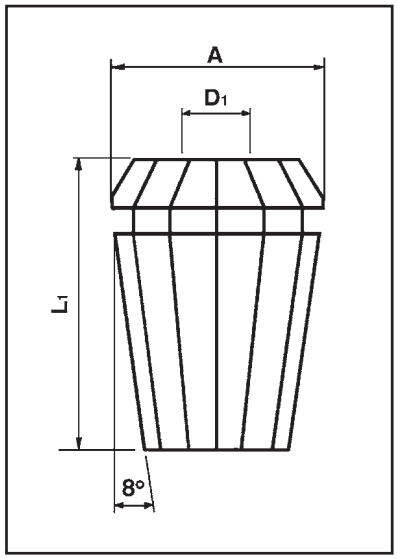

ECX/ER 50 Collets

L_1 = Total Length: 2.362" (60 mm) A = Max. Dia: 2.047" (52 mm)

CLAMPING RANGE		STANDARD PRECISION	ULTRA PRECISION	INCH SERIES	
Inches	Metric (mm)	Order No.	Order No.	Order No.	Size
0.393 - 0.472	10.0 - 12.0	050-480-SP	050-480	–	–
0.472 - 0.551	12.0 - 14.0	050-560-SP	050-560	–	–
0.551 - 0.629	14.0 - 16.0	050-640-SP	050-640	–	–
0.629 - 0.708	16.0 - 18.0	050-720-SP	050-720	–	–
0.708 - 0.787	18.0 - 20.0	050-800-SP	050-800	–	–
0.787 - 0.866	20.0 - 22.0	050-880-SP	050-880	–	–
0.866 - 0.945	22.0 - 24.0	050-960-SP	050-960	–	–
0.945 - 1.024	24.0 - 26.0	050-1040SP	050-1040	–	–
1.024 - 1.102	26.0 - 28.0	050-1120SP	050-1120	–	–
1.102 - 1.181	28.0 - 30.0	050-1200SP	050-1200	–	–
1.181 - 1.259	30.0 - 32.0	050-1280SP	050-1280	–	–
1.259 - 1.338	32.0 - 34.0	050-1360SP	050-1360	–	–

Wooden Collet Trays

ORDER NO.	COLLET STYLE	NUMBER OF HOLES
011-WT	ECX/ER 11	13
016-WT	ECX/ER 16	10
020-WT	ECX/ER 20	12
025-WT	ECX/ER 25	15
032-WT	ECX/ER 32	18
040-WT	ECX/ER 40	23

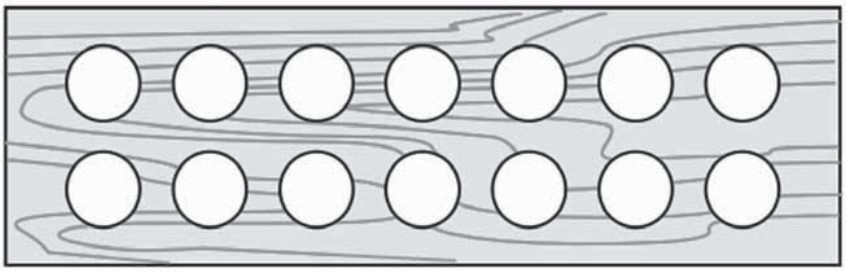

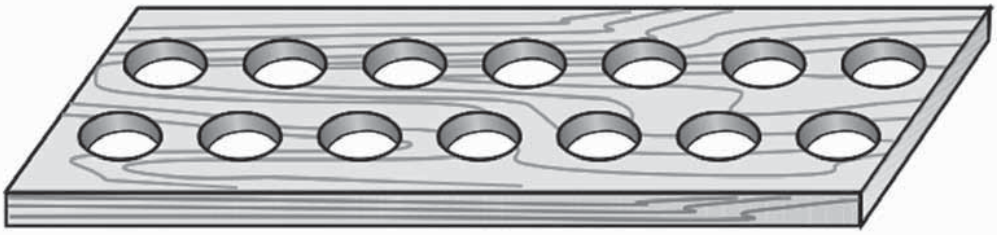

TECHLEADER® TOOLING INC.

ECX (ER) Super Flex
High Precision Coolant Sealed Collets
DIN 6499 / ISO 15488 - A - FORM D

Max Pressure 600 PSI

ECX/ER 16

L_1 = Total Length: 1.063" (27 mm) **A = Max. Dia: 0.657" (16.7 mm)**

CLAMPING DIAMETER Inches	Order No.	CLAMPING DIAMETER Metric (mm)	Order No.
1/8	016-008ICS	3	016-120-CS
5/32	016-010ICS	4	016-160-CS
3/16	016-012ICS	5	016-200-CS
7/32	016-014ICS	6	016-240-CS
1/4	016-016ICS	7	016-280-CS
9/32	016-018ICS	8	016-320-CS
5/16	016-020ICS	9	016-360-CS
11/32	016-022ICS	10	016-400-CS
3/8	016-024ICS	–	–

ECX/ER 20

L_1 = Total Length: 1.220" (31 mm) **A = Max. Dia: 0.815" (20.7 mm)**

CLAMPING DIAMETER Inches	Order No.	CLAMPING DIAMETER Metric (mm)	Order No.
1/8	020-008ICS	3	020-120-CS
5/32	020-010ICS	4	020-160-CS
3/16	020-012ICS	5	020-200-CS
7/32	020-014ICS	6	020-240-CS
1/4	020-016ICS	7	020-280-CS
9/32	020-018ICS	8	020-320-CS
5/16	020-020ICS	9	020-360-CS
11/32	020-022ICS	10	020-400-CS
3/8	020-024ICS	11	020-440-CS
13/32	020-026ICS	12	020-480-CS
7/16	020-028ICS	13	020-520-CS
15/32	020-030ICS	–	–
1/2	020-032ICS	–	–

TECHLEADER® TOOLING INC.

ECX (ER) Super Flex

High Precision Coolant Sealed Collets

DIN 6499 / ISO 15488 - A - FORM D

Max Pressure 600 PSI

ECX/ER 25

L_1 = Total Length: 1.338" (34 mm) A = Max. Dia: 1.011" (25.7 mm)

CLAMPING DIAMETER Inches	Order No.	CLAMPING DIAMETER Metric (mm)	Order No.
1/8	025-008ICS	3	025-120-CS
5/32	025-010ICS	4	025-160-CS
3/16	025-012ICS	5	025-200-CS
7/32	025-014ICS	6	025-240-CS
1/4	025-016ICS	7	025-280-CS
9/32	025-018ICS	8	025-320-CS
5/16	025-020ICS	9	025-360-CS
11/32	025-022ICS	10	025-400-CS
3/8	025-024ICS	11	025-440-CS
13/32	025-026ICS	12	025-480-CS
7/16	025-028ICS	13	025-520-CS
15/32	025-030ICS	14	025-560-CS
1/2	025-032ICS	15	025-600-CS
17/32	025-034ICS	16	025-640-CS
9/16	025-036ICS	–	–
19/32	025-038ICS	–	–
5/8	025-040ICS	–	–

ECX/ER 32

L_1 = Total Length: 1.575" (40 mm) A = Max. Dia: 1.287" (32.7 mm)

CLAMPING DIAMETER Inches	Order No.	CLAMPING DIAMETER Metric (mm)	Order No.
1/8	032-008ICS	3	032-120-CS
5/32	032-010ICS	4	032-160-CS
3/16	032-012ICS	5	032-200-CS
7/32	032-014ICS	6	032-240-CS
1/4	032-016ICS	7	032-280-CS
9/32	032-018ICS	8	032-320-CS
5/16	032-020ICS	9	032-360-CS
11/32	032-022ICS	10	032-400-CS
3/8	032-024ICS	11	032-440-CS
13/32	032-026ICS	12	032-480-CS
7/16	032-028ICS	13	032-520-CS
15/32	032-030ICS	14	032-560-CS
1/2	032-032ICS	15	032-600-CS
17/32	032-034ICS	16	032-640-CS
9/16	032-036ICS	17	032-680-CS
19/32	032-038ICS	18	032-720-CS
5/8	032-040ICS	19	032-760-CS
21/32	032-042ICS	20	032-800-CS
11/16	032-044ICS	–	–
23/32	032-046ICS	–	–
3/4	032-048ICS	–	–

TECHLEADER® TOOLING INC.

ECX (ER) Super Flex
High Precision Coolant Sealed Collets
DIN 6499 / ISO 15488 - A - FORM D

Max Pressure 600 PSI

ECX/ER 40

L_1 = Total Length: 1.811" (46 mm) **A = Max. Dia: 1.602" (40.7 mm)**

CLAMPING DIAMETER Inches	Order No.	CLAMPING DIAMETER Metric (mm)	Order No.
1/8	040-008ICS	4	040-160-CS
5/32	040-010ICS	5	040-200-CS
3/16	040-012ICS	6	040-240-CS
7/32	040-014ICS	7	040-280-CS
1/4	040-016ICS	8	040-320-CS
9/32	040-018ICS	9	040-360-CS
5/16	040-020ICS	10	040-400-CS
11/32	040-022ICS	11	040-440-CS
3/8	040-024ICS	12	040-480-CS
13/32	040-026ICS	13	040-520-CS
7/16	040-028ICS	14	040-560-CS
15/32	040-030ICS	15	040-600-CS
1/2	040-032ICS	16	040-640-CS
17/32	040-034ICS	17	040-680-CS
9/16	040-036ICS	18	040-720-CS
19/32	040-038ICS	19	040-760-CS
5/8	040-040ICS	20	040-800-CS
21/32	040-042ICS	21	040-840-CS
11/16	040-044ICS	22	040-880-CS
23/32	040-046ICS	23	040-920-CS
3/4	040-048ICS	24	040-960-CS
25/32	040-050ICS	25	040-1000-CS
13/16	040-052ICS	26	040-1040-CS
27/32	040-054ICS	–	–
7/8	040-056ICS	–	–
29/32	040-058ICS	–	–
15/16	040-060ICS	–	–
31/32	040-062ICS	–	–
1	040-064ICS	–	–

ECX (ER) Collet Nuts

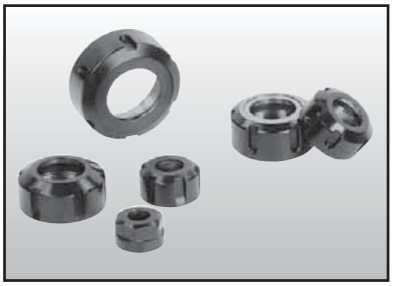

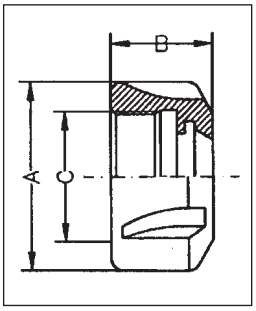

Castellation Nuts
for type ECX/ER/ESX Collets. Balanced

Chuck Size	Order No.	A (mm)	B (mm)	C	Max. rpm
ECX 16	016-000 NC	32	17.5	M22 x 1.5P	40,000
ECX 20	021-000 NC	35	19	M25 x 1.5P	40,000
ECX 25	025-000 NC	42	20	M32 x 1.5P	35,000
ECX 32	032-000 NC	50	23	M40 x 1.5P	35,000
ECX 40	040-000 NC	63	25	M50 x 1.5P	25,000
ECX 50	050-000 NC	78	35.5	M64 x 2.0P	15,000

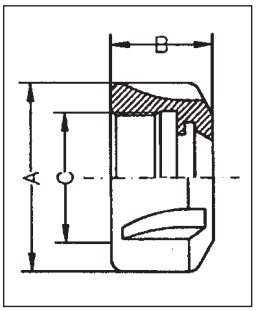

Castellation Nuts - High Clamping Power Style
for type ECX/ER/ESX Collets. Balanced

Chuck Size	Order No.	A (mm)	B (mm)	C	Max. rpm
ECX 16	016-000 NCC	32	17.5	M22 x 1.5P	40,000
ECX 20	021-000 NCC	35	19.0	M25 x 1.5P	40,000
ECX 25	025-000 NCC	42	20.0	M32 x 1.5P	35,000
ECX 32	032-000 NCC	50	23.0	M40 x 1.5P	35,000
ECX 40	040-000 NCC	63	25.0	M50 x 1.5P	25,000
ECX 50	050-000 NCC	78	35.5	M64 x 2.0P	15,000

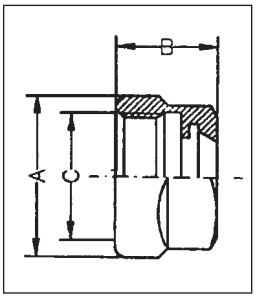

Hexagon Nuts
for type ECX/ER/ESX Collets. Balanced to 40,000 RPM

Chuck Size	Order No.	A (mm)	B (mm)	C
ECX 11	011-000-NH	19	12	M14 x 0.75P
ECX 16	016-000-NH	28	17.5	M22 x 1.5P
ECX 20	021-000-NH	34	19	M25 x 1.5P

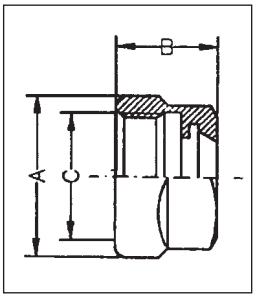

Hexagon Nuts - High Clamping Power Style
for type ECX/ER/ESX Collets. Balanced to 40,000 RPM

Chuck Size	Order No.	A (mm)	B (mm)	C
ECX 11	011-000 NHC	19	12.0	M14 x 0.75P
ECX 16	016-000 NHC	28	17.5	M22 x 1.5P
ECX 20	021-000 NHC	34	19.0	M25 x 1.5P

TECHLEADER® TOOLING INC.

ECX (ER) Collet Nuts

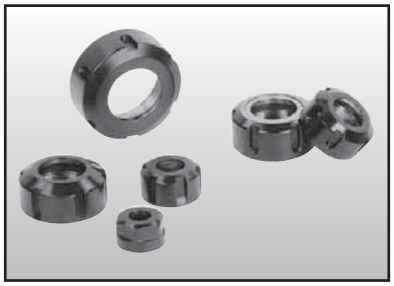

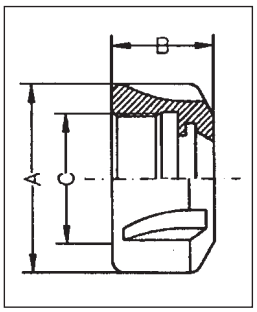

Castellation Nuts
for type ECX/ER/ESX Collets. Balanced over 15,000 RPM

Chuck Size	Order No.	A (mm)	B (mm)	C	Max. rpm
ECX 16	016-000 NHS	32	18.5	M22 x 1.5P	65,000
ECX 20	021-000 NHS	35	19.5	M25 x 1.5P	60,000
ECX 25	025-000 NHS	42	20.0	M32 x 1.5P	55,000
ECX 32	032-000 NHS	50	23.0	M40 x 1.5P	50,000
ECX 40	040-000 NHS	63	26.0	M50 x 1.5P	40,000

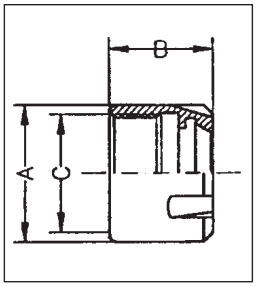

Mini Nuts
for type ECX/ER/ESX Collets

Chuck Size	Order No.	A (mm)	B (mm)	C	Max. rpm
ECX 8	008-000-NM	12	10.8	M10 x 0.75P	70,000
ECX 11	011-000-NM	16	11.3	M13 x 0.75P	30,000
ECX 16	016-000-NM	22	17	M19 x 1.0P	20,000
ECX 20	020-000-NM	28	19	M24 x 1.0P	10,000
ECX 25	025-000-NM	35	20	M30 x 1.0P	8,000

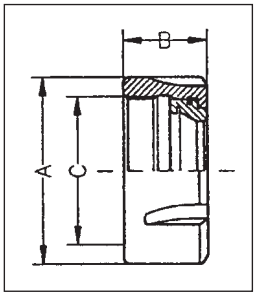

Friction Bearing Nuts
for type ECX/ER/ESX Collets

Chuck Size	Order No.	A (mm)	B (mm)	C
ECX 16	016-000 NFB	32	20.3	M22 x 1.5P
ECX 20	020-000 NFB	35	21.6	M25 x 1.5P
ECX 25	025-000 NFB	42	22.5	M32 x 1.5P
ECX 32	032-000 NFB	50	25.1	M40 x 1.5P
ECX 40	040-000 NFB	63	28.2	M50 x 1.5P

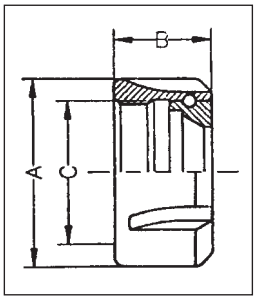

Ball Bearing Nuts
for type ECX/ER/ESX Collets

Chuck Size	Order No.	A (mm)	B (mm)	C
ECX 25	025-000-NB	42	22	M32 x 1.5P
ECX 32	032-000-NB	50	26	M40 x 1.5P
ECX 40	040-000-NB	63	29	M50 x 1.5P

TECHLEADER® TOOLING INC.

ECX (ER) Collet Nuts & Wrenches

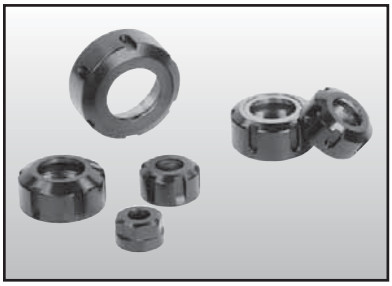

Nuts with thread on outside for type ECX/ER/ ESX, DR & RD Collets

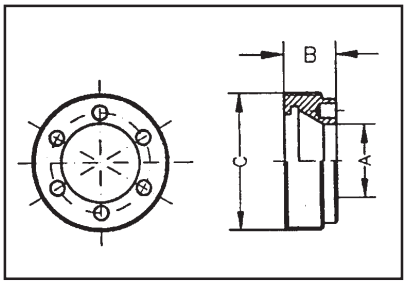

Pin Wrench Style

Chuck Size	Order No.	A	B	C
ECX 11	011-000-NAL	9 mm	6 mm	M18x1P
ECX 16	016-000-NAL	13mm	8 mm	M24x1P
ECX 20	020-000-NAL	15 mm	11 mm	M28x1.5P
ECX 25	025-000-NAL	18 mm	12.5 mm	M32x1.5P
ECX 32	032-000-NAL	24 mm	14 mm	M40x1.5P

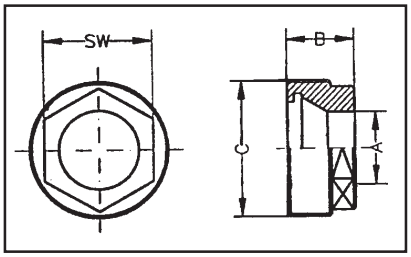

Hexagon Wrench Style

Chuck Size	Order No.	A	B	C
ECX 16	016-000-NAS	13 mm	11 mm	M24x1P
ECX 20	020-000-NAS	15 mm	14 mm	M28x1.5P
ECX 25	025-000-NAS	18 mm	14 mm	M32x1.5P
ECX 32	032-000-NAS	24 mm	17.5 mm	M40x1.5P

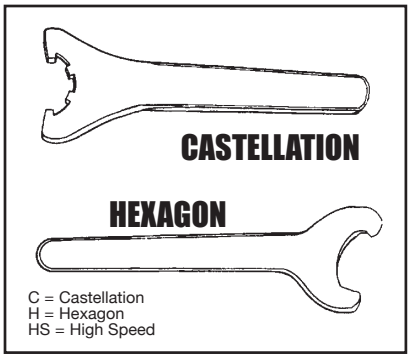

Spanners
for ECX Collet Chucks

Chuck Size	Order No.	Description
ECX 16	016-000-WH	SPANNER (H)
ECX 16	016-000-WC	SPANNER (C)
ECX 16HS	016-000-HSW	SPANNER (HS)
ECX 20	021-000-WC	SPANNER (C)
ECX 20	021-000-WH	SPANNER (H)
ECX 25	025-000-WC	SPANNER (C)
ECX 32	032-000-WC	SPANNER (C)
ECX 40	040-000-WC	SPANNER (C)

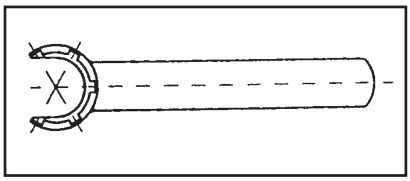

Mini Nut Style

Chuck Size	Order No.
ECX 8	008-000-WM
ECX 11	011-000-WM
ECX 16	016-000-WM
ECX 20	020-000-WM
ECX 25	025-000-WM

TECHLEADER® TOOLING INC.

Coolant Sealed Collet Nuts & Discs

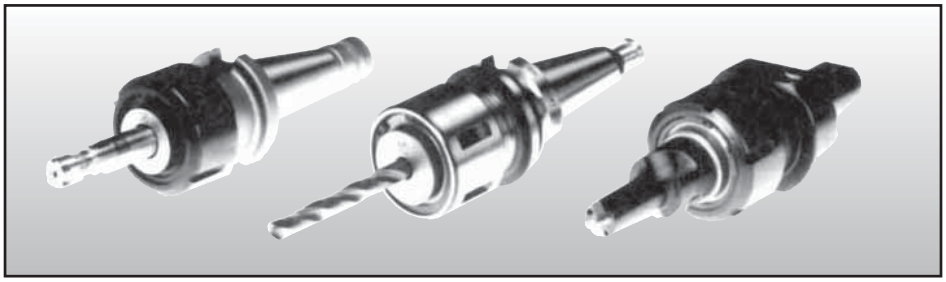

Techleader coolant sealed nuts and discs are used on collet chucks when the requirement is for internal, through-the-tool coolant. The nuts are recessed internally to accept a coolant disc having various bore diameters to suit the cutting tool shanks. The nuts can be used with all standard TG, & ECX/ER style collet chucks. No disassembly is required when changing worn-out tools and the cutting tool can be inserted or removed from the front. The sealing device within the disc has a total flexibility of 0.5 mm (-0.40 to +0.10 mm) from the nominal bore size indicated on the disc - e.g. a 16 mm disc has a range from 15.6 to 16.1 mm. Therefore all inch/metric shank diameters are covered within the disc range. The system can handle up to 100 bars (1,500 psi) of pressure.

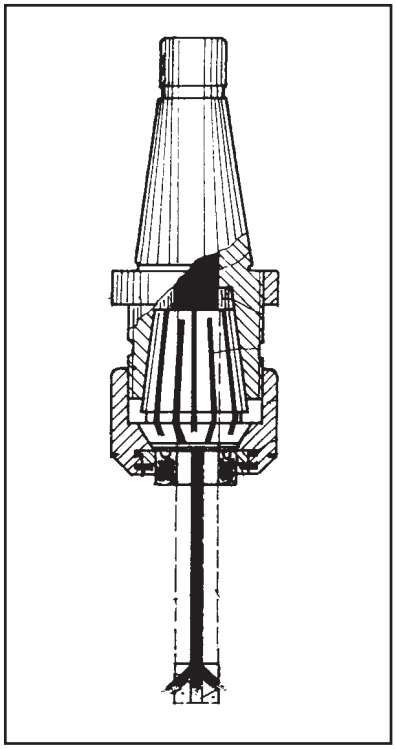

Coolant Sealed Collet Nuts & Discs

Coolant Sealed Nuts

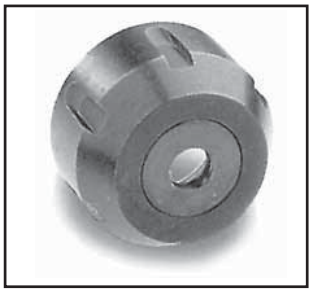

ECX TYPE

Order No.	Device Type	Thread
405-001601	ERZD16	M22 x 1.5
405-002001	ERZD20	M25 x 1.5
405-002501	ERZD25	M32 x 1.5
405-003201	ERZD32	M40 x 1.5
405-004001	ERZD40	M50 x 1.5

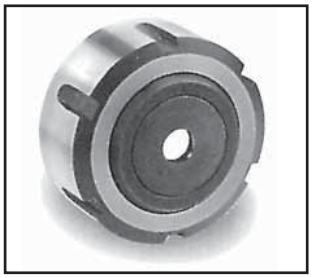

TG TYPE

Order No.	Device Type
405-007500	BEZD75
405-010000	BEZD100

TECHLEADER® TOOLING INC.

Coolant Sealed Collet Nuts & Discs

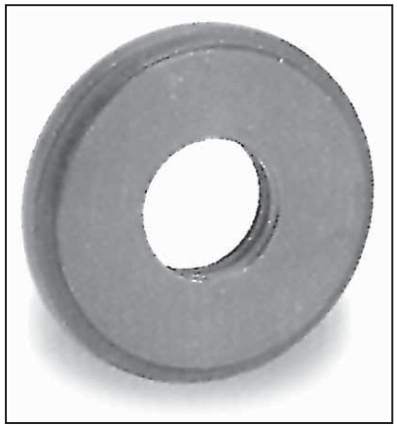

Coolant Sealed Disk

mm	Inch	ECX/ER 16	ECX/ER 20	TG75 ECX/ER 25	TG100 ECX/ER 32	ECX/ER 40
3.5 - 3.0	0.138 - 0.118	405-316035	405-320035	405-325035	405-332035	405-340035
4.0 - 3.5	0.157 - 0.138	405-316040	405-320040	405-325040	405-332040	405-340040
4.5 - 4.0	0.177 - 0.157	405-316045	405-320045	405-325045	405-332045	405-340045
5.0 - 4.5	0.196 - 0.177	405-316050	405-320050	405-325050	405-332050	405-340050
5.5 - 5.0	0.216 - 0.196	405-316055	405-320055	405-325055	405-332055	405-340055
6.0 - 5.5	0.236 - 0.216	405-316060	405-320060	405-325060	405-332060	405-340060
6.5 - 6.0	0.255 - 0.236	405-316065	405-320065	405-325065	405-332065	405-340065
7.0 - 6.5	0.275 - 0.255	405-316070	405-320070	405-325070	405-332070	405-340070
7.5 - 7.0	0.295 - 0.275	405-316075	405-320075	405-325075	405-332075	405-340075
8.0 - 7.5	0.315 - 0.295	405-316080	405-320080	405-325080	405-332080	405-340080
8.5 - 8.0	0.334 - 0.315	405-316085	405-320085	405-325085	405-332085	405-340085
9.0 - 8.5	0.354 - 0.334	405-316090	405-320090	405-325090	405-332090	405-340090
9.5 - 9.0	0.374 - 0.354	405-316095	405-320095	405-325095	405-332095	405-340095
10.0 - 9.5	0.393 - 0.374	405-316100	405-320100	405-325100	405-332100	405-340100
10.5 - 10.0	0.413 - 0.393		405-320105	405-325105	405-332105	405-340105
11.0 - 10.5	0.433 - 0.413		405-320110	405-325110	405-332110	405-340110
11.5 - 11.0	0.452 - 0.433		405-320115	405-325115	405-332115	405-340115
12.0 - 11.5	0.472 - 0.452		405-320120	405-325120	405-332120	405-340120
12.5 - 12.0	0.492 - 0.472		405-320125	405-325125	405-332125	405-340125
13.0 - 12.5	0.511 - 0.492		405-320130	405-325130	405-332130	405-340130
13.5 - 13.0	0.531 - 0.511			405-325135	405-332135	405-340135
14.0 - 13.5	0.551 - 0.531			405-325140	405-332140	405-340140
14.5 - 14.0	0.570 - 0.551			405-325145	405-332145	405-340145
15.0 - 14.5	0.590 - 0.570			405-325150	405-332150	405-340150
15.5 - 15.0	0.610 - 0.590			405-325155	405-332155	405-340155
16.0 - 15.5	0.629 - 0.610			405-325160	405-332160	405-340160
16.5 - 16.0	0.649 - 0.629				405-332165	405-340165
17.0 - 16.5	0.669 - 0.649				405-332170	405-340170
17.5 - 17.0	0.688 - 0.669				405-332175	405-340175
18.0 - 17.5	0.708 - 0.688				405-332180	405-340180
18.5 - 18.0	0.728 - 0.708				405-332185	405-340185
19.0 - 18.5	0.748 - 0.728				405-332190	405-340190
19.5 - 19.0	0.767 - 0.748				405-332195	405-340195
20.0 - 19.5	0.787 - 0.767				405-332200	405-340200
20.5 - 20.0	0.807 - 0.787					405-340205
21.0 - 20.5	0.826 - 0.807					405-340210
21.5 - 21.0	0.846 - 0.826					405-340215
22.0 - 21.5	0.866 - 0.846					405-340220
22.5 - 22.0	0.885 - 0.866					405-340225
23.0 - 22.5	0.905 - 0.885					405-340230
23.5 - 23.0	0.925 - 0.905					405-340235
24.0 - 23.5	0.944 - 0.925					405-340240
24.5 - 24.0	0.964 - 0.944					405-340245
25.0 - 24.5	0.984 - 0.964					405-340250
25.5 - 25.0	1.003 - 0.984					405-340255
26.0 - 25.5	1.023 - 1.003					405-340260

ETS High Precision Self-centering Collets

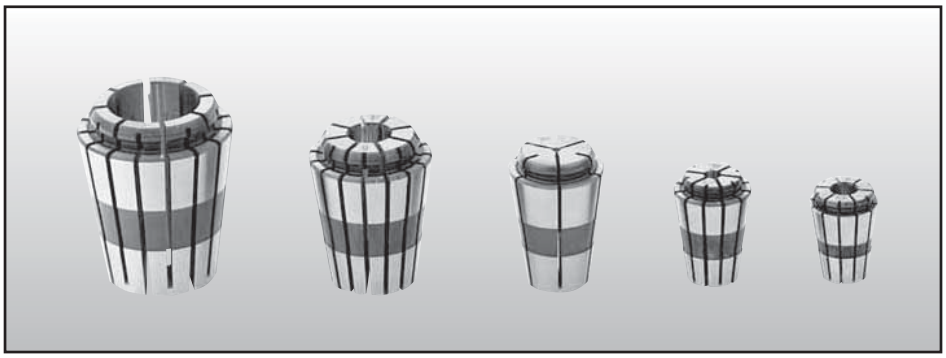

ETS High Precision Self-centering Collet

Made in Switzerland

The patented ETS Collet system features a self-centering design to provide unmatched accuracy and uniform gripping pressure at any speed. It can hold tools with diameter of less than 0.3 mm/ 0.0118” with extremely small tolerances.

The outer conical surface of the ETS Collet and the corresponding inner surface of the collet holder slide into a groove, so that when the collet is closed, the two surfaces are in contact only at their end parts. Since they meet and snap into place at the point where the circumferences are equal, the front part of the collet grips the tool with even pressure completely around.

This design ensures precise tool centering and rigidity for precision cutting with minimal runout at any speed. Improved gripping pressure and self-centering contribute to longer tool life, making the ETS Collet system ideal for long run repeatability for CNC milling, drilling or reaming.

It is simple to convert your ECX/ER collet chucks or extensions. Just purchase the appropriate ETS Nut and now you can use the High Accuracy ETS Collets on your existing collets chucks & extensions.

TECHLEADER® TOOLING INC.

ETS High Precision Self-Centering Collets

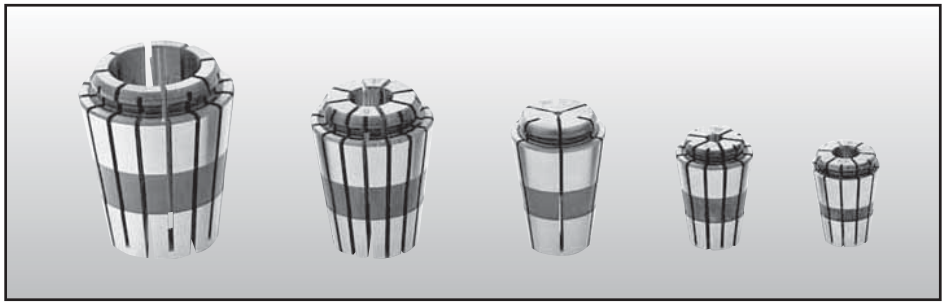

ETS High Precision Self-centering Collets

Note: To use ETS Collets in your ER/ECX Collet Chucks Extensions and Spindles, you must purchase the appropriate ETS Nut

Made in Switzerland

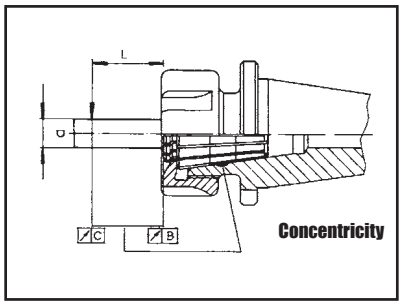

In Inches		Standard ECX/ER/ESX Collets MAX	ETS Standard Collets MAX	ETS Collets MAX	ETS U.P. Collets MAX
D da-a	L	C	C	B	C
0.0078-0.0354	0.118	0.0006	0.00039	0.00012	0.0002
0.039-0.0551	0.236	0.0008	0.00039	0.00012	0.0002
0.0590-0.1141	0.393	0.0008	0.00059	0.00012	0.0002
0.118-0.236	0.629	0.0008	0.00059	0.00012	0.0002
0.255-0.393	0.984	0.0008	0.00059	0.00012	0.00027
0.433-0.708	1.575	0.0012	0.0008	0.00015	0.00039
0.748-1.023	1.968	0.0012	0.0008	0.00019	0.00047

ETS Patent Pending in all industrialized countries of importance

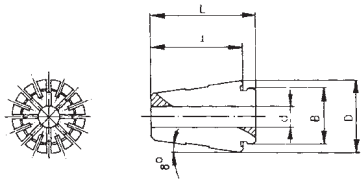

ETS 6 - ETS 8 5°

	Metric Dimensions						champing limit
	ØD	ØB	L	l	Ød	INCR	
ETS 6	6	4.30	11	9	0.20-2.00	0.10	0.10-2.00
ETS 8	8	6.30	13.2	11	1.00-4.00	0.10	0.90-4.00
ETS 10	10	7.30	14	11.80	1.00-5.00	0.10	0.90-5.00
ETS 12	12	10.40	17	14.20	1.00-4.00 5.00-7.00	0.25 1.00	0.75-7.00
ETS 14	14.55	13.0	20.5	17.50	1.00-4.00 3.00-8.00	0.25 0.50	0.75-8.00
ETS 16	17	13.60	24	21	1.00-4.00 5.00-10.00	0.25 1.00	0.75-10.00
ETS 20	21	17.0	30.50	26.70	1.00-4.00 5.00-12.00	0.25 1.00	0.75-12.00
ETS 25	26	21.0	34.0	29.40	1.00-4.00 5.00-16.00	0.25 1.00	0.75-16.00
ETS 32	33	27.20	40.0	34.70	1.00-4.00 5.00-20.00	0.25 1.00	0.75-20.00
ETS 40	41	32.0	46	40.60	4.00-26.00	1.00	3.00-26.00

Standard Collets

Collet with automatic extraction types ETS

These collets can fit your standard DR, ER, ECX & RD Collet Chucks, Extensions and spindles.

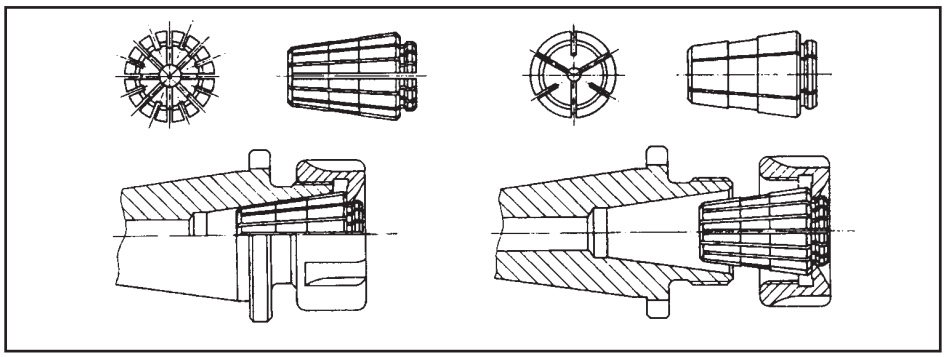

TECHLEADER® TOOLING INC.

ETS High Precision Self-Centering Collets

ETS High Precision Self-centering Collets

Made in Switzerland

ETS 14

CLAMPING RANGE		STANDARD PRECISION	ULTRA PRECISION
Inches (in)	Metric (mm)	Order No.	Order No.
0.0196 - 0.0295	0.50 - 0.75	114-028	114-028-UP
0.0295 - 0.039	0.75 - 1.00	114-040	114-040-UP
0.039 - 0.049	1.00 - 1.25	114-050	114-050-UP
0.049 - 0.059	1.25 - 1.50	114-060	114-060-UP
0.059 - 0.0689	1.50 - 1.75	114-070	114-070-UP
0.0689 - 0.0787	1.75 - 2.00	114-080	114-080-UP
0.0787 - 0.0886	2.00 - 2.25	114-090	114-090-UP
0.0886 - 0.0984	2.25 -2.50	114-100	114-100-UP
0.0984 - 0.118	2.50 - 3.00	114-120	114-120-UP
0.118 - 0.138	3.00 - 3.50	114-140	114-140-UP
0.138 - 0.157	3.50 - 4.00	114-160	114-160-UP
0.157 - 0.177	4.00 - 4.50	114-180	114-180-UP
0.177 - 0.197	4.50 - 5.00	114-200	114-200-UP
0.197 - 0.216	5.00 - 5.50	114-220	114-220-UP
0.216 - 0.236	5.50 - 6.00	114-240	114-240-UP
0.236 - 0.256	6.00 - 6.50	114-260	114-260-UP
0.256 - 0.276	6.50 - 7.00	114-280	114-280-UP
0.276 - 0.295	7.00 - 7.50	114-300	114-300-UP
0.295 - 0.315	7.50 - 8.00	114-320	114-320-UP

ETS 16

CLAMPING RANGE		STANDARD PRECISION	ULTRA PRECISION
Inches (in)	Metric (mm)	Order No.	Order No.
0.004 - 0.008	0.10 - 0.20	116-008	116-008-UP
0.008 - 0.012	0.20 - 0.30	116-012	116-012-UP
0.012 - 0.016	0.30 - 0.40	116-016	116-016-UP
0.016 - 0.0196	0.40 - 0.50	116-020	116-020-UP
0.0196 - 0.0236	0.50 - 0.60	116-024	116-024-UP
0.0295 - 0.039	0.75 - 1.00	116-040	116-040-UP
0.039 - 0.049	1.00 - 1.25	116-050	116-050-UP
0.049 - 0.059	1.25 - 1.50	116-060	116-060-UP
0.059 - 0.0689	1.50 - 1.75	116-070	116-070-UP
0.0689 - 0.0787	1.75 - 2.00	116-080	116-080-UP
0.0787 - 0.0886	2.00 - 2.25	116-090	116-090-UP
0.0886 - 0.0984	2.25 - 2.50	116-100	116-100-UP
0.0984 - 0.118	2.50 - 3.00	116-120	116-120-UP
0.118 - 0.138	3.00 - 3.50	116-140	116-140-UP
0.138 - 0.157	3.50 - 4.00	116-160	116-160-UP
0.157 - 0.197	4.00 - 5.00	116-200	116-200-UP
0.197 - 0.236	5.00 - 6.00	116-240	116-240-UP
0.236 - 0.276	6.00 - 7.00	116-280	116-280-UP
0.276 - 0.315	7.00 - 8.00	116-320	116-320-UP
0.315 - 0.354	8.00 - 9.00	116-360	116-360-UP
0.354 - 0.394	9.00 - 10.00	116-400	116-400-UP

TECHLEADER® TOOLING INC.

ETS High Precision Self-Centering Collets

ETS High Precision Self-centering Collets

Made in Switzerland

ETS 20

CLAMPING RANGE		STANDARD PRECISION	ULTRA PRECISION
Inches (in)	Metric (mm)	Order No.	Order No.
0.029 - 0.039	0.75 - 1.00	120-040	120-040-UP
0.039 - 0.049	1.00 - 1.25	120-050	120-050-UP
0.049 - 0.059	1.25 - 1.50	120-060	120-060-UP
0.059 - 0.0689	1.50 - 1.75	120-070	120-070-UP
0.0689 - 0.0787	1.75 - 2.00	120-080	120-080-UP
0.0787 - 0.0886	2.00 - 2.25	120-090	120-090-UP
0.0886 - 0.0984	2.25 - 2.50	120-100	120-100-UP
0.0984 - 0.118	2.50 - 3.00	120-120	120-120-UP
0.118 - 0.138	3.00 - 3.50	120-140	120-140-UP
0.138 - 0.157	3.50 - 4.00	120-160	120-160-UP
0.157 - 0.197	4.00- 5.00	120-200	120-200-UP
0.197 - 0.236	5.00 - 6.00	120-240	120-240-UP
0.236 - 0.276	6.00 - 7.00	120-280	120-280-UP
0.276 - 0.315	7.00 - 8.00	120-320	120-320-UP
0.315 - 0.354	8.00 - 9.00	120-360	120-360-UP
0.354 - 0.394	9.00 - 10.00	120-400	120-400-UP
0.394 - 0.433	10.00 - 11.00	120-440	120-440-UP
0.433 - 0.472	11.00 - 12.00	120-480	120-480-UP
0.472 - 0.512	12.00 - 13.00	120-520	120-520-UP

ETS 25

CLAMPING RANGE		STANDARD PRECISION	ULTRA PRECISION
Inches (in)	Metric (mm)	Order No.	Order No.
0.029 - 0.039	0.75 - 1.00	125-040	125-040-UP
0.039 - 0.049	1.00 - 1.25	125-050	125-050-UP
0.049 - 0.059	1.25 - 1.50	125-060	125-060-UP
0.059 - 0.0689	1.50 - 1.75	125-070	125-070-UP
0.0689 - 0.0787	1.75 - 2.00	125-080	125-080-UP
0.0787 - 0.0886	2.00 - 2.25	125-090	125-090-UP
0.0886 - 0.0984	2.25 - 2.50	125-100	125-100-UP
0.0984 - 0.118	2.50 - 3.00	125-120	125-120-UP
0.118 - 0.138	3.00 - 3.50	125-140	125-140-UP
0.138 - 0.157	3.50 - 4.00	125-160	125-160-UP
0.157 - 0.197	4.00- 5.00	125-200	125-200-UP
0.197 - 0.236	5.00 - 6.00	125-240	125-240-UP
0.236 - 0.276	6.00 - 7.00	125-280	125-280-UP
0.276 - 0.315	7.00 - 8.00	125-320	125-320-UP
0.315 - 0.354	8.00 - 9.00	125-360	125-360-UP
0.354 - 0.394	9.00 - 10.00	125-400	125-400-UP
0.394 - 0.433	10.00 - 11.00	125-440	125-440-UP
0.433 - 0.472	11.00 - 12.00	125-480	125-480-UP
0.472 - 0.512	12.00 - 13.00	125-520	125-520-UP
0.512 - 0.551	13.00 - 14.00	125-560	125-560-UP
0.551 - 0.591	14.00 - 15.00	125-600	125-600-UP
0.591 - 0.630	15.00 - 16.00	125-640	125-640-UP

TECHLEADER® TOOLING INC.

ETS High Precision Self-Centering Collets

ETS High Precision Self-centering Collets

Made in Switzerland

ETS 32

CLAMPING RANGE		STANDARD PRECISION	ULTRA PRECISION
Inches (in)	Metric (mm)	Order No.	Order No.
0.049 - 0.059	1.25 - 1.50	132-060	132-060-UP
0.059 - 0.087	1.50 - 2.00	132-080	132-080-UP
0.087 - 0.0984	2.00 - 2.50	132-100	132-100-UP
0.0984 - 0.118	2.50 - 3.00	132-120	132-120-UP
0.118 - 0.138	3.00 - 3.50	132-140	132-140-UP
0.138 - 0.157	3.50 - 4.00	132-160	132-160-UP
0.157 - 0.197	4.00 - 5.00	132-200	132-200-UP
0.197 - 0.236	5.00 - 6.00	132-240	132-240-UP
0.236 - 0.276	6.00 - 7.00	132-280	132-280-UP
0.276 - 0.315	7.00 - 8.00	132-320	132-320-UP
0.315 - 0.354	8.00 - 9.00	132-360	132-360-UP
0.354 - 0.394	9.00 - 10.00	132-400	132-400-UP
0.394 - 0.433	10.00 - 11.00	132-440	132-440-UP
0.433 - 0.472	11.00 - 12.00	132-480	132-480-UP
0.472 - 0.512	12.00 - 13.00	132-520	132-520-UP
0.512 - 0.551	13.00 - 14.00	132-560	132-560-UP
0.551 - 0.591	14.00 - 15.00	132-600	132-600-UP
0.591 - 0.630	15.00 - 16.00	132-640	132-640-UP
0.630 - 0.669	16.00 - 17.00	132-680	132-680-UP
0.669 - 0.709	17.00 - 18.00	132-720	132-720-UP
0.709 - 0.748	18.00 - 19.00	132-760	132-760-UP
0.748 - 0.787	19.00 - 20.00	132-800	132-800-UP

ETS 40

CLAMPING RANGE		STANDARD PRECISION	ULTRA PRECISION
Inches (in)	Metric (mm)	Order No.	Order No.
0.118 - 0.157	3.00 - 4.00	140-160	140-160-UP
0.157 - 0.197	4.00 - 5.00	140-200	140-200-UP
0.197 - 0.236	5.00 - 6.00	140-240	140-240-UP
0.236 - 0.276	6.00 - 7.00	140-280	140-280-UP
0.276 - 0.315	7.00 - 8.00	140-320	140-320-UP
0.315 - 0.354	8.00 - 9.00	140-360	140-360-UP
0.354 - 0.394	9.00 - 10.00	140-400	140-400-UP
0.394 - 0.433	10.00 - 11.00	140-440	140-440-UP
0.433 - 0.472	11.00 - 12.00	140-480	140-480-UP
0.472 - 0.512	12.00 - 13.00	140-520	140-520-UP
0.512 - 0.551	13.00 - 14.00	140-560	140-560-UP
0.551 - 0.591	14.00 - 15.00	140-600	140-600-UP
0.591 - 0.629	15.00 - 16.00	140-640	140-640-UP
0.629 - 0.669	16.00 - 17.00	140-680	140-680-UP
0.669 - 0.709	17.00 - 18.00	140-720	140-720-UP
0.709 - 0.748	18.00 - 19.00	140-760	140-760-UP
0.748 - 0.787	19.00 - 20.00	140-800	140-800-UP
0.787 - 0.827	20.00 - 21.00	140-840	140-840-UP
0.827 - 0.866	21.00 - 22.00	140-880	140-880-UP
0.866 - 0.906	22.00 - 23.00	140-920	140-920-UP
0.906 - 0.945	23.00 - 24.00	140-960	140-960-UP
0.945 - 0.984	24.00 - 25.00	140-1000	140-1000-UP
0.984 - 1.024	25.00 - 26.00	140-1040	140-1040-UP

ETS High Precision Self-Centering Collet Nuts

NUTS

Chuck Size	Order No.	A_1 Ø (mm)	B (mm)	C	S (mm)
ETS 12 (Fig.1)	112-000-N	19	15	M14 x 0.75P	17
ETS 14 (Fig.2)	114-000-N	22	11.2	M17 x 1P	—
ETS 16 (Fig.1)	116-000-N	26.7	15	M20 x 1P	24
ETS 16 (Fig.2)	116-000-N1	32	15	M22 x 1.5P	—
ETS 20 (Fig.2)	120-000-N	35	16.5	M25 x 1.5P	—
ETS 25 (Fig.2)	125-000-N	42	18.5	M32 x 1.5P	—
ETS 32 (Fig.2)	132-000-N	50	22	M40 x 1.5P	—
ETS 40 (Fig.2)	140-000-N	63	25	M50 x 1.5P	—

Fig. 1

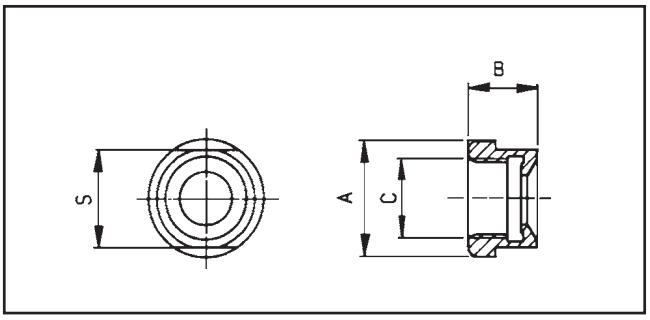

Fig. 2

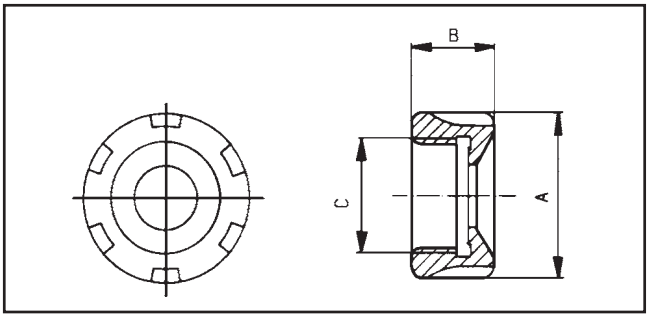

TECHLEADER® TOOLING INC.

YCX Collets

YCX Collets

Inch and special bore sizes are available on request

Interchangeable with YCC collets

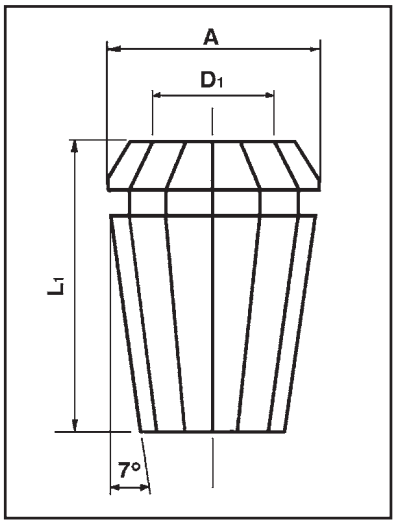

YCX 13 Collets

L_1 = Total Length: 1.260" (32 mm) A = Max. Dia: 0.866" (22 mm)

CLAMPING RANGE		METRIC	INCH SERIES	
Inches (in)	Metric (mm)	Order No.	Order No.	Size (in)
0.0196 - 0.039	0.5 - 1.0	313-040	313-008	1/8
0.039 - 0.059	1.0 - 1.5	313-060	313-016	1/4
0.059 - 0.087	1.5 - 2.0	313-080	313-024	3/8
0.087 - 0.0984	2.0 - 2.5	313-100	313-032	1/2
0.0984 - 0.118	2.5 - 3.0	313-120	–	–
0.118 - 0.138	3.0 - 3.5	313-140	–	–
0.138 - 0.157	3.5 - 4.0	313-160	–	–
0.157 - 0.197	4.0 - 5.0	313-200	–	–
0.197 - 0.236	5.0 - 6.0	313-240	–	–
0.236 - 0.276	6.0 - 7.0	313-280	–	–
0.276 - 0.315	7.0 - 8.0	313-320	–	–
0.315 - 0.354	8.0 - 9.0	313-360	–	–
0.354 - 0.394	9.0 - 10.0	313-400	–	–
0.394 - 0.433	10.0 - 11.0	313-440	–	–
0.433 - 0.472	11.0 - 12.0	313-480	–	–
0.472 - 0.512	12.0 - 13.0	313-520	–	–

YCX 16 Collets

L_1 = Total Length: 1.378 (35 mm) A = Max. Dia: 1.024" (26 mm)

CLAMPING RANGE		METRIC	INCH SERIES	
Inches (in)	Metric (mm)	Order No.	Order No.	Size (in)
0.094 - 0.118	2.5 - 3.0	316-120	316-008	1/8
0.118 - 0.138	3.0 - 3.5	316-140	316-016	1/4
0.138 - 0.157	3.5 - 4.0	316-160	316-024	3/8
0.157 - 0.197	4.0 - 5.0	316-200	316-032	1/2
0.197 - 0.236	5.0 - 6.0	316-240	316-040	5/8
0.236 - 0.276	6.0 - 7.0	316-280	–	–
0.276 - 0.315	7.0 - 8.0	316-320	–	–
0.315 - 0.354	8.0 - 9.0	316-360	–	–
0.354 - 0.393	9.0 - 10.0	316-400	–	–
0.393 - 0.433	10.0 - 11.0	316-440	–	–
0.433 - 0.472	11.0 - 12.0	316-480	–	–
0.472 - 0.512	12.0 - 13.0	316-520	–	–
0.512 - 0.551	13.0 - 14.0	316-560	–	–
0.551 - 0.591	14.0 - 15.0	316-600	–	–
0.591 - 0.630	15.0 - 16.0	316-640	–	–

TECHLEADER® TOOLING INC.

YCX Collets

YCX Collets

Inch and special bore sizes are available on request

Interchangeable with YCC collets

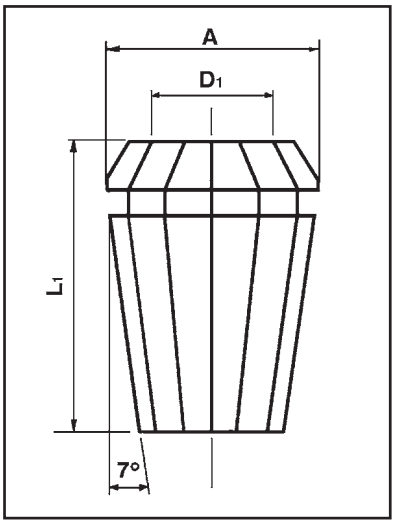

YCX 20 Collets

L_1 = Total Length: 1.772" (45 mm) A = Max. Dia: 1.339" (34 mm)

CLAMPING RANGE		METRIC	INCH SERIES	
Inches (in)	Metric (mm)	Order No.	Order No.	Size (in)
0.118 - 0.138	3.0 - 3.5	320-140	320-016	1/4
0.138 - 0.157	3.5 - 4.0	320-160	320-024	3/8
0.157 - 0.197	4.0 - 5.0	320-200	320-032	1/2
0.197 - 0.236	5.0 - 6.0	320-240	320-040	5/8
0.236 - 0.276	6.0 - 7.0	320-280	320-048	3/4
0.276 - 0.315	7.0 - 8.0	320-320	–	–
0.315 - 0.354	8.0 - 9.0	320-360	–	–
0.354 - 0.394	9.0 - 10.0	320-400	–	–
0.394 - 0.433	10.0 - 11.0	320-440	–	–
0.433 - 0.472	11.0 - 12.0	320-480	–	–
0.472 - 0.512	12.0 - 13.0	320-520	–	–
0.512 - 0.551	13.0 - 14.0	320-560	–	–
0.551 - 0.591	14.0 - 15.0	320-600	–	–
0.591 - 0.630	15.0 - 16.0	320-640	–	–
0.630 - 0.669	16.0 - 17.0	320-680	–	–
0.669 - 0.709	17.0 - 18.0	320-720	–	–
0.709 - 0.748	18.0 - 19.0	320-760	–	–
0.748 - 0.787	19.0 - 20.0	320-800	–	–

YCX 25 Collets

L_1 = Total Length: 2.205" (56 mm) A = Max. Dia: 1.654" (42 mm)

CLAMPING RANGE		METRIC	INCH SERIES	
Inches (in)	Metric (mm)	Order No.	Order No.	Size (in)
0.118' - 0.157	3.0 - 4.0	325-160	325-016	1/4
0.157 - 0.197	4.0 - 5.0	325-200	325-024	3/8
0.197 - 0.236	5.0 - 6.0	325-240	325-032	1/2
0.236 - 0.275	6.0 - 7.0	325-280	325-040	5/8
0.275 - 0.315	7.0 - 8.0	325-320	325-048	3/4
0.315 - 0.354	8.0 - 9.0	325-360	325-064	1
0.354 - 0.394	9.0 - 10.0	325-400	–	–
0.394 - 0.433	10.0 - 11.0	325-440	–	–
0.433 - 0.472	11.0 - 12.0	325-480	–	–
0.472 - 0.512	12.0 - 13.0	325-520	–	–
0.512 - 0.551	13.0 - 14.0	325-560	–	–
0.551 - 0.591	14.0 - 15.0	325-600	–	–
0.591 - 0.630	15.0 - 16.0	325-640	–	–
0.630 - 0.669	16.0 - 17.0	325-680	–	–
0.669 - 0.709	17.0 - 18.0	325-720	–	–
0.709 - 0.748	18.0 - 19.0	325-760	–	–
0.748 - 0.787	19.0 - 20.0	325-800	–	–
0.787 - 0.827	20.0 - 21.0	325-840	–	–
0.827 - 0.866	21.0 - 22.0	325-920	–	–
0.866 - 0.905	22.0 - 23.0	325-920	–	–
0.905 - 0.945	23.0 - 24.0	325-960	–	–
0.945 - 0.984	24.0 - 25.0	325-1000	–	–

TECHLEADER® TOOLING INC.

YCX Collets

YCX Collets

Inch and special bore sizes are available on request

Interchangeable with YCC collets

YCX 32 Collets

L_1 = Total Length: 2.835" (72 mm) A = Max. Dia: 2.008" (51 mm)

CLAMPING RANGE		METRIC	INCH SERIES	
Inches	Metric (mm)	Order No.	Order No.	Size (in)
0.197 - 0.236	5.0 - 6.0	332-240	332-016	1/4
0.276 - 0.315	7.0 - 8.0	332-320	332-024	3/8
0.315 - 0.354*	8.0 - 9.0	332-360	332-032	1/2
0.354 - 0.394	9.0 - 10.0	332-400	332-040	5/8
0.433 - 0.472	11.0 - 12.0	332-480	332-048	3/4
0.591 - 0.630	15.0 - 16.0	332-640	332-064	1
0.669 - 0.709	17.0 - 18.0	332-720	332-080	1-1/4
0.748 - 0.787	19.0 - 20.0	332-800	–	–
0.827 - 0.866*	21.0 - 22.0	332-880	–	–
0.945 - 0.984	24.0 - 25.0	332-1000	–	–
1.063 - 1.102	27.0 - 28.0	332-1120	–	–
1.142 - 1.181	29.0 - 30.0	332-1200	–	–
1.220 - 1.260	31.0 - 32.0	332-1280	–	–

* While is stock is still available

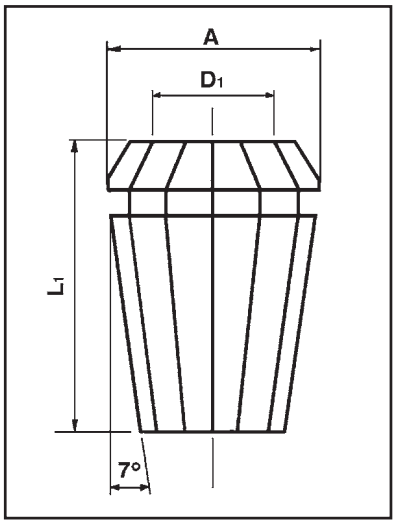

TECHLEADER® TOOLING INC.

Full Grip Collets

407E (SY0Z 20)

L_1 Total Length: 1.338" (34 mm) A = Max. Dia: 0.779" (19.8 mm)

CLAMPING RANGE	METRIC	INCH SERIES	
Metric (mm)	Order No.	Order No.	Size (in)
3mm	1833-503	1833-008	1/8
4mm	1833-504	1833-012	3/16
5mm	1833-505	1833-016	1/4
6mm	1833-506	1833-020	5/16
7mm	1833-507	1833-024	3/8
8mm	1833-508	1833-028	7/16
9mm	1833-509	1833-032	1/2
10mm	1833-510	–	–
11mm	1833-511	–	–
12mm	1833-512	–	–

Full Grip Collets

415E

L_1 Total Length: 1.575" (40 mm) A = Max. Dia: 1.004" (25.5 mm)

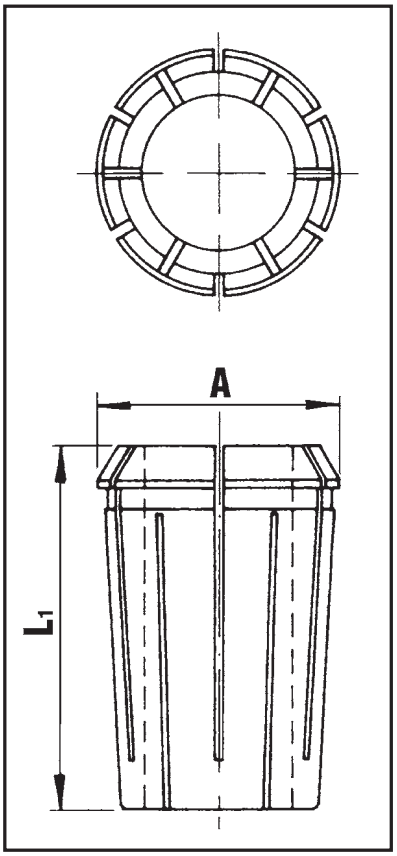

CLAMPING RANGE	METRIC	INCH SERIES	
Metric (mm)	Order No.	Order No.	Size (in)
2.0-2.5	3465-100	–	–
2.5-3.0	3465-120	–	–
3.0-3.5	3465-140	–	–
3.5-4.0	3465-160	–	–
4.0-4.5	3465-180	–	–
4.5-5.0	3465-200	–	–
5.0-5.5	3465-220	–	–
5.5-6.0	3465-240	–	–
6.0-6.5	3465-260	–	–
6.5-7.0	3465-280	–	–
7.0-7.5	3465-300	–	–
7.5-8.0	3465-320	–	–
8.0-8.5	3465-340	–	–
8.5-9.0	3465-360	–	–
9.0-9.5	3465-380	–	–
9.5-10.0	3465-400	–	–
10.0-10.5	3465-420	–	–
10.5-11.0	3465-440	–	–
11.0-11.5	3465-460	–	–
11.5-12.0	3465-480	–	–
12.0-12.5	3465-500	–	–
12.5-13.0	3465-520	–	–
13.0-13.5	3465-540	–	–
13.5-14.0	3465-560	–	–
14.0-14.5	3465-580	–	–
14.5-15.0	3465-600	–	–
15.0-15.5	3465-620	–	–
15.5-16.0	3465-640	–	–

TECHLEADER® TOOLING INC.

Full Grip Collets

Full Grip Collets

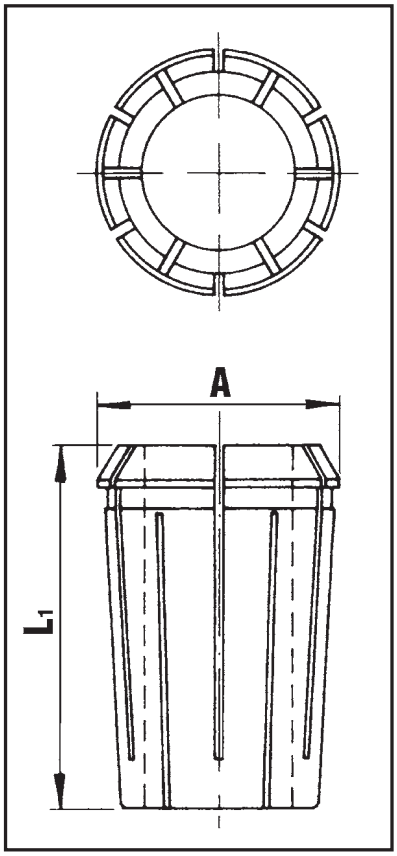

462E (SYOZ 25)

L_1 Total Length: 2.047" (52 mm) A = Max. Dia: 1.380" (35.05 mm)

CLAMPING RANGE		METRIC	INCH SERIES	
Inches	Metric (mm)	Order No.	Order No.	Size (in)
0.158-0.177	4.0-4.5	3466-180	1836-008	1/8
0.177-0.197	4.5-5.0	3466-200	1836-012	3/16
0.197-0.216	5.0-5.5	3466-220	1836-016	1/4
0.216-0.236	5.5-6.0	3466-240	1836-020	5/16
0.236-0.256	6.0-6.5	3466-260	1836-024	3/8
0.256-0.276	6.5-7.0	3466-280	1836-028	7/16
0.276-0.295	7.0-7.5	3466-300	1836-032	1/2
0.295-0.315	7.5-8.0	3466-320	1836-036	9/16
0.315-0.335	8.0-8.5	3466-340	1836-040	5/8
0.335-0.354	8.5-9.0	3466-360	1836-044	11/16
0.354-0.374	9.0-9.5	3466-380	1836-048	3/4
0.374-0.394	9.5-10.0	3466-400	1836-052	13/16
0.394-0.413	10.0-10.5	3466-420	1836-056	7/8
0.413-0.433	10.5-11.0	3466-440	1836-060	15/16
0.433-0.452	11.0-11.5	3466-460	1836-064	1
0.452-0.472	11.5-12.0	3466-480	–	–
0.472-0.492	12.0-12.5	3466-500	–	–
0.492-0.512	12.5-13.0	3466-520	–	–
0.512-0.531	13.0-13.5	3466-540	–	–
0.531-0.551	13.5-14.0	3466-560	–	–
0.551-0.571	14.0-14.5	3466-580	–	–
0.571-0.591	14.5-15.0	3466-600	–	–
0.591-0.610	15.0-15.5	3466-620	–	–
0.610-0.630	15.5-16.0	3466-640	–	–
0.630-0.650	16.0-16.5	3466-660	–	–
0.650-0.669	16.5-17.0	3466-680	–	–
0.669-0.689	17.0-17.5	3466-700	–	–
0.689-0.709	17.5-18.0	3466-720	–	–
0.709-0.728	18.0-18.5	3466-740	–	–
0.728-0.748	18.5-19.0	3466-760	–	–
0.748-0.768	19.0-19.5	3466-780	–	–
0.768-0.787	19.5-20.0	3466-800	–	–
0.787-0.807	20.0-20.5	3466-820	–	–
0.807-0.827	20.5-21.0	3466-840	–	–
0.827-0.847	21.0-21.5	3466-860	–	–
0.847-0.866	21.5-22.0	3466-880	–	–
0.866-0.886	22.0-22.5	3466-900	–	–
0.886-0.905	22.5-23.0	3466-920	–	–
0.905-0.925	23.0-23.5	3466-940	–	–
0.925-0.945	23.5-24.0	3466-960	–	–
0.945-0.965	24.0-24.5	3466-980	–	–
0.965-0.984	24.5-25.0	3466-1000	–	–

TECHLEADER® TOOLING INC.

Full Grip Collets

Full Grip Collets

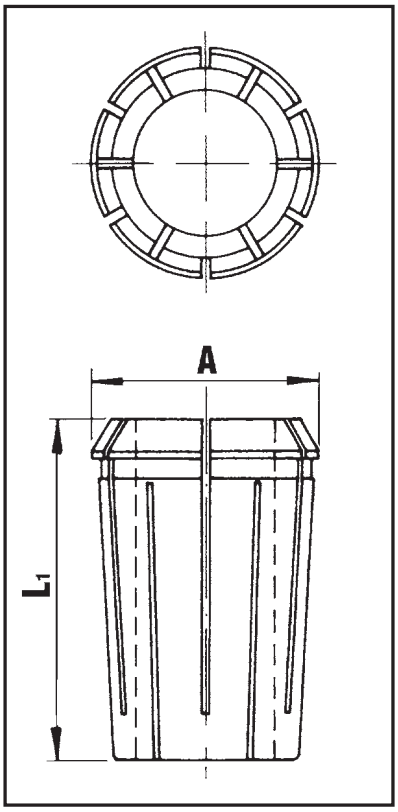

BALL BEARING NUT

467E

L_1 Total Length: 2.362" (60 mm) A = Max. Dia: 1.720" (43.7 mm)

CLAMPING RANGE		METRIC	INCH SERIES	
Inches	Metric (mm)	Order No.	Order No.	Size (in)
0.216-0.236	5.5-6.0	3467-240	1837-008	1/8
0.236-0.256	6.0-6.5	3467-260	1837-012	3/16
0.256-0.276	6.5-7.0	3467-280	1837-016	1/4
0.276-0.295	7.0-7.5	3467-300	1837-020	5/16
0.295-0.315	7.5-8.0	3467-320	1837-024	3/8
0.315-0.335	8.0-8.5	3467-340	1837-028	7/16
0.335-0.354	8.5-9.0	3467-360	1837-032	1/2
0.354-0.374	9.0-9.5	3467-380	1837-036	9/16
0.374-0.393	9.5-10.0	3467-400	1837-040	5/8
0.393-0.413	10.0-10.5	3467-420	1837-044	11/16
0.413-0.433	10.5-11.0	3467-440	1837-048	3/4
0.433-0.452	11.0-11.5	3467-460	1837-052	13/16
0.452-0.472	11.5-12.0	3467-480	1837-056	7/8
0.472-0.492	12.0-12.5	3467-500	1837-060	15/16
0.492-0.512	12.5-13.0	3467-520	1837-064	1
0.512-0.531	13.0-13.5	3467-540	1837-068	1-1/16
0.531-0.551	13.5-14.0	3467-560	1837-072	1-1/8
0.551-0.570	14.0-14.5	3467-580	1837-076	1-3/16
0.570-0.590	14.5-15.0	3467-600	1837-080	1-1/4
0.590-0.610	15.0-15.5	3467-620	–	–
0.610-0.629	15.5-16.0	3467-640	–	–
0.629-0.649	16.0-16.5	3467-660	–	–
0.649-0.669	16.5-17.0	3467-680	–	–
0.669-0.689	17.0-175	3467-700	–	–
0.689-0.708	17.5-18.0	3467-720	–	–
0.708-0.728	18.0-18.5	3467-740	–	–
0.728-0.748	18.5-19.0	3467-760	–	–
0.748-0.768	19.0-19.5	3467-780	–	–
0.768-0.787	19.5-20.0	3467-800	–	–
0.787-0.807	20.0-20.5	3467-820	–	–
0.807-0.827	20.5-21.0	3467-840	–	–
0.827-0.846	21.0-21.5	3467-860	–	–
0.846-0.866	21.5-22.0	3467-880	–	–
0.866-0.886	22.0-22.5	3467-900	–	–
0.886-0.905	22.5-23.0	3467-920	–	–
0.905-0.925	23.0-23.5	3467-940	–	–
0.925-0.945	23.5-24.0	3467-960	–	–
0.945-0.964	24.0-24.5	3467-980	–	–
0.964-0.984	24.5-25.0	3467-1000	–	–
0.984-1.004	25.0-25.5	3467-1020	–	–
1.004-1.023	25.5-26.0	3467-1040	–	–
1.023-1.043	26.0-26.5	3467-1060	–	–
1.043-1.063	26.5-27.0	3467-1080	–	–
1.063-1.082	27.0-27.5	3467-1100	–	–
1.082-1.102	27.5-28.0	3467-1120	–	–
1.102-1.122	28.0-28.5	3467-1140	–	–
1.122-1.142	28.5-29.0	3467-1160	–	–
1.142-1.161	29.0-29.5	3467-1180	–	–
1.161-1.181	29.5-30.0	3467-1200	–	–
1.181-1.201	30.0-30.5	3467-1220	–	–
1.201-1.220	30.5-31.0	3467-1240	–	–
1.220-1.240	31.0-31.5	3467-1260	–	–
1.240-1.260	31.5-32.0	3467-1280	–	–

BALL BEARING NUTS FOR FULL GRIP COLLETS

COLLET STYLE	Order No.	A(mm)	B (mm)	C
415E	1823-000-N	43	24	M33 X 1.5P
462E	1825-000-N	60	30	M48 X 2.0P
467E	1826-000-N	72	33.5	M60 X 2.5P

TECHLEADER® TOOLING INC.

Flexible Rubber Collets

Drill Holders with Flexible Rubber-Collets up to 13 mm Capacity

Capacity can be increased to 15 mm by using special nut and flexible rubber collet J445

Accuracy

Techleader drill holders and flexible rubber collets are manufactured to high quality standards. Acceptable runout is guaranteed within the full collet range.

Gripping Range

Techleader drill holders using flexible rubber collets, when compared with holders using conventional collets having only a 0.5 mm gripping range, drastically reduce costs. The number of collets to cover the total capacity of the holder is less consequently the initial outlay is less and the subsequent servicing and replacement costs are minimized.

Gripping Power and Accuracy

In closing a flexible rubber collet perfect parallelism is maintained between the long collet bearing surfaces and the holder shank. Thus the high accuracy and gripping power of Techleader drill holders are constant throughout the entire collet range.

High Quality Standard of Collet Cones

Customers who manufacture their own spindles to use Techleader flexible rubber collets, must ensure very close tolerances on the mating cone angle, otherwise, the essential parallelism will not be obtained.

Accuracy:
Admissible runout in a test spindle

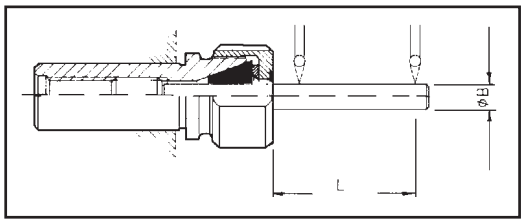

B h5	L	Admissible runout
from 0.039” to 0.063”	0.236”	0.001”
over 0.063” to 0.118”	0.394”	0.001”
over 0.118” to 0.236”	0.394”	0.001”
over 0.236” to 0.394”	1.000”	0.001”
over 0.394” to 0.590”	1.574”	0.001”

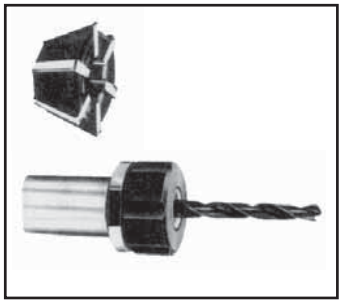

Drill Holders with Cylindrical Shank

Order No.	Model	Capacity	Shank dia	Length
410-005	41	1-6.5 mm/0.040”-0.256”	5/8”	1.18”
410-010	41	1-6.5 mm/0.040”-0.256”	3/4”	1.81”
420-010	42	2-10 mm/0.079”-0.394”	3/4”	1.81”
420-015	42	2-10 mm/0.079”-0.394”	1”	1.81”
440-015	44	1.8-15 mm/0.070”-0.590”	1”	1.81”

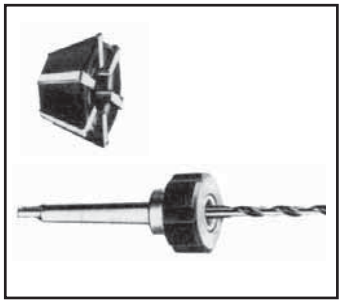

Drill Holders with Morse Taper shank DIN 228

Order No.	Model	Capacity	Shank dia
410-001	41	1-6.5 mm/0.040”-0.256”	MT.1
410-002	41	1-6.5 mm/0.040”-0.256”	MT.2
420-001	42	2-10 mm/0.079”-0.394”	MT.1
420-002	42	2-10 mm/0.079”-0.394”	MT.2
420-003	42	2-10 mm/0.079”-0.394”	MT.3
440-001	44	1.8-15 mm/0.070”-0.590”	MT.1
440-002	44	1.8-15 mm/0.070”-0.590”	MT.2
440-003	44	1.8-15 mm/0.070”-0.590”	MT.3

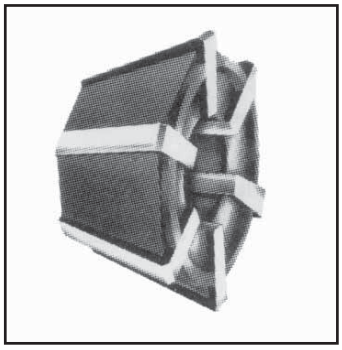

Order No.	Model	Collet	Size	
410-115	41	J115	0.010”-0.098”	1-2.5 mm
410-116	41	J116	0.098”-0.177”	2.5-4.5 mm
410-117	41	J117	0.177”-0.256”	4.5-6.5 mm
420-423	42	J423	0.079”-0.177”	2-4.5 mm
420-420	42	J420	0.177”-0.315”	4.5-8 mm
420-421	42	J421	0.138”-0.256”	3.5-6.5 mm
420-422	42	J422	0.256”-0.394”	6.5-10 mm
440-444	44	J444	0.071”-0.177”	1.8-4.5 mm
440-441	44	J441	0.177”-0.394”	4.5-10 mm
440-443	44	J443	0.110”-0.276”	2.8-7 mm
440-440	44	J440	0.276”-0.512”	7-13 mm
440-445	44	J445	0.354”-0.590”	9-15 mm

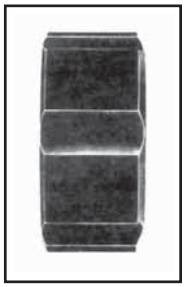

Nuts for Flexible Rubber Collets

Order No.	Model	Collet
410-000-N	41	J115-J116-J117
420-000-N	42	J423-J420
420-000-N	42	J421-J442
440-000-N	44	J444-J441
440-000-N	44	J443-J440
440-000-N1	44	J445

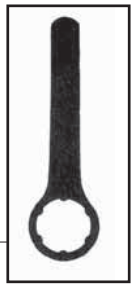

Spanners for Flexible Rubber Collet Nuts

Order No.	Model
410-000-S	41
420-000-S	42
440-000-S	44

TECHLEADER® TOOLING INC.

ECX/ER Tap Collets

For rigid (Synchronous) tapping operations using ECX/ER Collet Chucks the internal bore of collet is to the exact tool diameter, with Square Drive for accuracy and rigidity.

DIN 6499 / ISO 15488 - A - FORM D

TAP SIZE ANSI	SHANK SIZE	SQUARE SIZE	ORDER NO.				
			ECX 16	ECX 20	ECX 25	ECX 32	ECX 40
No. 0-6	0.141”	0.110”	016-100 RTC	020-100 RTC	025-100 RTC	032-100 RTC	040-100 RTC
No. 8	0.168”	0.131”	016-101 RTC	020-101 RTC	025-101 RTC	032-101 RTC	040-101 RTC
No. 10	0.194”	0.152”	016-102 RTC	020-102 RTC	025-102 RTC	032-102 RTC	040-102 RTC
No. 12	0.220”	0.165”	016-103 RTC	020-103 RTC	025-103 RTC	032-103 RTC	040-103 RTC
1/4”	0.255”	0.191”	016-104 RTC	020-104 RTC	025-104 RTC	032-104 RTC	040-104 RTC
5/16”	0.318”	0.238”	016-105 RTC	020-105 RTC	025-105 RTC	032-105 RTC	040-105 RTC
3/8”	0.381”	0.286”	–	020-106 RTC	025-106 RTC	032-106 RTC	040-106 RTC
7/16”	0.323”	0.242”	–	020-107 RTC	025-107 RTC	032-107 RTC	040-107 RTC
1/2”	0.367”	0.275”	–	020-108 RTC	025-108 RTC	032-108 RTC	040-108 RTC
9/16”	0.429”	0.322”	–	–	025-109 RTC	032-109 RTC	040-109 RTC
5/8”	0.480”	0.360”	–	–	025-110 RTC	032-110 RTC	040-110 RTC
11/16”	0.542”	0.406”	–	–	–	032-111 RTC	040-111 RTC
3/4”	0.590”	0.442”	–	–	–	032-112 RTC	040-112 RTC
13/16”	0.652”	0.489”	–	–	–	032-113 RTC	040-113 RTC
7/8”	0.697”	0.523”	–	–	–	–	040-114 RTC
15/16”	0.760”	0.570”	–	–	–	–	040-115 RTC
1”	0.800”	0.600”	–	–	–	–	040-116 RTC
1/8”PSS	0.3125”	0.234”	016-150 RTC	020-150 RTC	025-150 RTC	032-150 RTC	040-150 RTC
1/8”PLS	0.4375”	0.328”	–	–	025-151 RTC	032-151 RTC	040-151 RTC
1/4”P	0.562”	0.421”	–	–	–	032-152 RTC	040-152 RTC
3/8”P	0.700”	0.531”	–	–	–	–	040-153 RTC
1/2”P	0.6875”	0.515”	–	–	–	–	040-154 RTC

TECHLEADER® TOOLING INC.

ECX/ER Tap Collets

For rigid (Synchronous) tapping operations using ECX/ER Collet Chucks the internal bore of collet is to the exact tool diameter, with Square Drive for accuracy and rigidity.

DIN 6499 / ISO 15488 - A - FORM D

TAP SIZE ANSI	SHANK SIZE	SQUARE SIZE	ORDER NO.				
			ECX 16	ECX 20	ECX 25	ECX 32	ECX 40
M2-M2.6	2.8 m	2.1 mm	016-201 RTC	–	–	–	–
M3- M5	3.5 mm	2.7 mm	016-202 RTC	020-202 RTC	025-202 RTC	032-202 RTC	–
M3.5	4 mm	3 mm	016-203 RTC	020-203 RTC	025-203 RTC	032-203 RTC	–
M4	4.5 mm	3.4 mm	016-204 RTC	020-204 RTC	025-204 RTC	032-204 RTC	–
M4.5-M8	6.0 mm	4.9 mm	016-205 RTC	020-205 RTC	025-205 RTC	032-205 RTC	040-205 RTC
M10	7.0 mm	5.5 mm	016-206 RTC	020-206 RTC	025-206 RTC	032-206 RTC	040-206 RTC
M8	8.0 mm	6.2 mm	016-207 RTC	020-207 RTC	025-207 RTC	032-207 RTC	040-207 RTC
M9-M12	9.0 mm	7.0 mm	016-208 RTC	020-208 RTC	025-208 RTC	032-208 RTC	040-208 RTC
M10	10.0 mm	8.0 mm	–	020-209 RTC	025-209 RTC	032-209 RTC	040-209 RTC
M14	11.0 mm	9.0 mm	–	020-210 RTC	025-210 RTC	032-210 RTC	040-210 RTC
M16	12.0 mm	9.0 mm	–	–	025-211 RTC	032-211 RTC	040-211 RTC
M18	14.0 mm	11.0 mm	–	–	025-212 RTC	032-212 RTC	040-212 RTC
M20	16.0 mm	12.0 mm	–	–	–	032-213 RTC	040-213 RTC
M22-M24	18.0 mm	14.5 mm	–	–	–	032-214 RTC	040-214 RTC
M30	22.0 mm	18.0 mm	–	–	–	–	040-216 RTC

TAPPING PROBLEMS?

CONTACT US FOR UNIQUE TAPPING SOLUTIONS.

USE HIGH PERFORMANCE TAPS FROM

DC®

THREADING TECHNOLOGY

SWISS MADE

TECHLEADER® TOOLING INC.

TG Tap Collets

For rigid (Synchronous) tapping operations using TG Collet Chucks the internal bore of collet is to the exact tool diameter, with Square Drive for accuracy and rigidity.

TAP SIZE ANSI	SHANK SIZE	SQUARE SIZE	ORDER NO.	
			TG 75	TG 100
No. 0-6	0.141”	0.110”	075-100 RTC	100-100 RTC
No. 8	0.168”	0.131”	075-101 RTC	100-101 RTC
No. 10	0.194”	0.152”	075-102 RTC	100-102 RTC
No. 12	0.220”	0.165”	075-103 RTC	100-103 RTC
1/4”	0.255”	0.191”	075-104 RTC	100-104 RTC
5/16”	0.318”	0.238”	075-105 RTC	100-105 RTC
3/8”	0.381”	0.286”	075-106 RTC	100-106 RTC
7/16”	0.323”	0.242”	075-107 RTC	100-107 RTC
1/2”	0.367”	0.275”	075-108 RTC	100-108 RTC
9/16”	0.429”	0.322”	075-109 RTC	100-109 RTC
5/8”	0.480”	0.360”	075-110 RTC	100-110 RTC
11/16”	0.542”	0.406”	075-111 RTC	100-111 RTC
3/4”	0.590”	0.442”	075-112 RTC	100-112 RTC
13/16”	0.652”	0.489”	–	100-113 RTC
7/8”	0.697”	0.523”	–	100-114 RTC
15/16”	0.760”	0.570”	–	100-115 RTC
1”	0.800”	0.600”	–	100-116 RTC
1/8”PSS	0.3125”	0.234”	075-150 RTC	100-150 RTC
1/8”PLS	0.4375”	0.328”	075-151 RTC	100-151 RTC
1/4”P	0.562”	0.421”	075-152 RTC	100-152 RTC
3/8”P	0.700”	0.531”	–	100-153 RTC
1/2”P	0.6875”	0.515”	–	100-154 RTC

TAPPING PROBLEMS?

CONTACT US FOR UNIQUE TAPPING SOLUTIONS.

USE HIGH PERFORMANCE TAPS FROM

DC®

THREADING TECHNOLOGY

SWISS MADE

TECHLEADER® TOOLING INC.

Positive Quick Change Tap Adapters

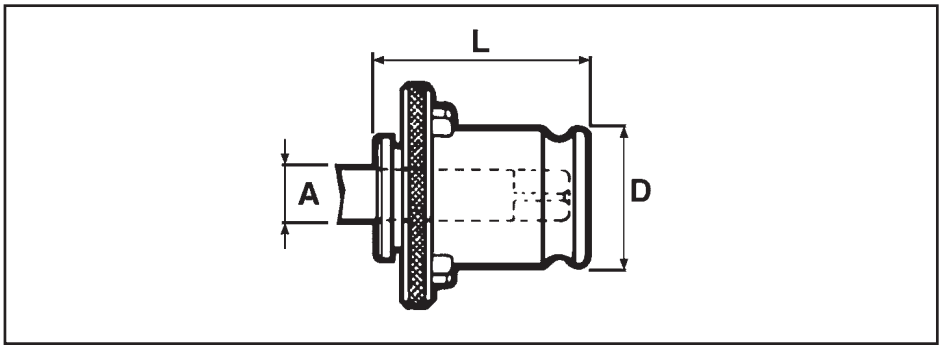

Bilz Type Tap Chucks

adapter size	tap size range	American Standard TAPS order no.	tap size	A shank dia	square AF	ISO Standard Metric TAPS order no.	tap size	A shank dia	square AF	DIN Standard Metric TAPS order no.	tap size	A shank dia	square AF
CE–1*	M3-M14 0-9/16" HAND	700-100	0-6	.141	.110	710-002	M1/2	2.50	2.00	710-101	M2	2.80	2.10
		700-101	8	.168	.131	710-003	M3	3.15	2.50	710-102	M3/5	3.50	2.70
		700-102	10	.194	.152	710-004	M4	4.00	3.15	710-103	M3.5	4.00	3.00
		700-103	12	.220	.165	710-005	M4.5	4.50	3.55	710-104	M4/6	4.50	3.40
		700-104	1/4	.255	.191	710-006	M5	5.00	4.00	710-106	M5/6/8	6.00	4.90
		700-105	5/16	.318	.238	710-008	M6	6.30	5.00	710-107	M7/10	7.00	5.50
		700-106	3/8	.381	.286	710-009	M7	7.10	5.60	710-108	M8	8.00	6.20
D = 19mm/0.748"		700-107	7/16	.323	.242	710-108	M8/11	8.00	6.20	710-011	M12	9.00	7.10
L = 28.5mm/1.122"		700-108	1/2	.367	.275	710-011	M9/12	9.00	7.10	710-012	M10	10.00	8.00
		700-109	9/16	.429	.322	710-012	M10	10.00	8.00	710-111	M14	11.00	9.00
	1/8" PIPE	700-150	1/8pss	.3125	.234	710-013	M14	11.20	9.00				
		700-151	1/8pls	.4375	.328								
CE–2*	M7-M24 5/16-7/8" HAND	700-205	5/16	.318	.238	720-009	M7	7.10	5.60	720-107	M7/10	7.00	5.50
		700-206	3/8	.381	.286	720-108	M8/11	8.00	6.20	720-108	M8	8.00	6.20
		700-207	7/16	.323	.242	720-011	M9/12	9.00	7.00	720-011	M12	9.00	7.00
		700-208	1/2	.367	.275	720-012	M10	10.00	8.00	720-012	M10	10.00	8.00
		700-209	9/16	.429	.322	720-013	M14	11.20	9.00	720-111	M14	11.00	9.00
		700-210	5/8	.480	.360	720-014	M16	12.50	10.00	720-112	M16	12.00	9.00
		700-211	11/16	.542	.406	720-015	M18/20	14.00	11.20	720-113	M18	14.00	11.00
D = 31mm/1.220"		700-212	3/4	.590	.442	720-016	M22	16.00	12.50	720-114	M20	16.00	12.00
L = 46mm/1,811"		700-213	13/16	.652	.489	720-017	M24	18.00	14.00	720-115	M22/24	18.00	14.50
		700-214	7/8	.697	.523								
	1/4"-3/8" 1/2" PIPE	700-250	1/4p	.562	.421								
		700-251	3/8p	.700	.531								
		700-252	1/2p	.6875	.515								
CE-3*	M14-M40 13/16-1-3/8" HAND	700-313	13/16	.652	.489	730-013	M14	11.20	9.00	730-111	M14	11.00	9.00
		700-314	7/8	.697	.523	730-014	M16	12.50	10.00	730-112	M16	12.00	9.00
		700-315	15/16	.760	.570	730-015	M18/20	14.00	11.00	730-015	M18	14.00	11.00
		700-316	1	.800	.600	730-016	M22	16.00	12.50	730-114	M20	16.00	12.00
		700-318	1-1/8	.896	.672	730-017	M24	18.00	14.00	730-115	M22/24	18.00	14.50
D = 48mm/1.890"		700-320	1-1/4	1.021	.766	730-018	M27/30	20.00	16.00	730-018	M27	20.00	16.00
L = 69.5mm/2.736"		700-322	1-3/8	1.108	.831	730-019	M33	22.40	18.00	730-117	M30	22.00	18.00
	3/4 & 1" PIPE	700-349	1/2p	.6875	.515	730-020	M36	25.00	20.00	730-020	M33	25.00	20.00
		700-350	3/4p	.906	.679	730-021	M39/40	28.00	22.00	730-021	M36	28.00	22.00
		700-351	1p	1.125	.843								
CE-4*	M22-M48 1" - 1-7/8" HAND	700-424	1-1/2	1.233	.925					740-115	M22/24	18.00	14.50
		700-426	1-5/8	1.305	.979					740-018	M27	20.00	16.00
		700-428	1-3/4	1.430	1.072					740-117	M30	22.00	18.00
		700-430	1-7/8	1.519	1.139					740-120	M33	25.00	20.00
D = 60mm/2.362"										740-021	M36	28.00	22.00
L = 105mm/4.134"										740-020	M39/42	32.00	24.00
										740-121	M45/48	36.00	29.00
	3/4", 1" 1-1/4" & 1-1/2" PIPE	700-452	1-1/4p	1.3125	.984								
		700-453	1-1/2p	1.5000	1.125								

* Interchangeable with WE □ Tap Adapters.

TAPPING PROBLEMS?

CONTACT US FOR UNIQUE TAPPING SOLUTIONS.

USE HIGH PERFORMANCE TAPS FROM

DC®

THREADING TECHNOLOGY

SWISS MADE

TECHLEADER® TOOLING INC.

Adjustable Torque Control Tap Adapters

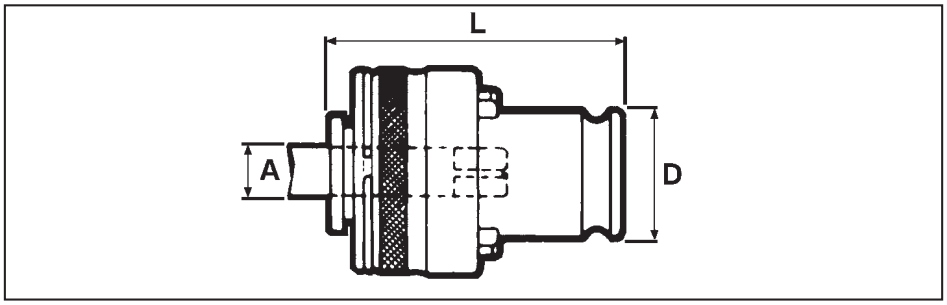

Bilz Type Tap Chucks

adapter size	tap size range	American Standard TAPS order no.	tap size	A shank dia	square AF	ISO Standard Metric TAPS order no.	tap size	A shank dia	square AF	DIN Standard Metric TAPS order no.	tap size	A shank dia	square AF
CES1B*	M3-M14 0-9/16" HAND	701-100	0-6	.141	.110	712-004	M4	4.00	3.15	712-101	M2	2.80	2.10
		701-101	8	.168	.131	712-005	M4.5	4.50	3.55	712-102	M3	3.50	2.70
		701-102	10	.194	.152	712-006	M5	5.00	4.00	712-154	M5	3.50	2.70
		701-103	12	.220	.165	712-008	M6	6.30	5.00	712-103	M3.5	4.00	3.00
		701-104	1/4	.255	.191	712-009	M7	7.10	5.60	712-104	M4	4.50	3.40
		701-105	5/16	.318	.238	712-108	M8	8.00	6.20	712-155	M6	4.50	3.40
	D = 19mm/0.748"	701-106	3/8	.381	.286	712-011	M9	9.00	7.10	712-106	M5	6.00	4.90
	L = 40.5mm/1.594"	701-107	7/16	.323	.242	712-012	M10	10.00	8.00	712-156	M6	6.00	4.90
		701-108	1/2	.367	.275	712-050	M14	8.00	6.30	712-157	M8	6.00	4.90
		701-109	9/16	.429	.322	712-109	M12	9.00	7.00	712-107	M10	7.00	5.50
	1/8" PIPE	701-150	1/8pss	.3125	.234					712-108	M8	8.00	6.20
		701-151	1/8pss	.4375	.328					712-109	M12	9.00	7.00
										712-012	M10	10.00	8.00
CES2B*	M7-M24 5/16-7/8" HAND	701-205	5/16	.318	.238	722-009	M7	7.10	5.60	722-107	M7	7.00	5.50
		701-206	3/8	.381	.286	722-108	M8	8.00	6.20	722-108	M8	8.00	6.20
		701-207	7/16	.323	.242	722-011	M9	9.00	7.10	722-109	M12	9.00	7.00
		701-208	12	.367	.275	722-012	M10	10.00	8.00	722-012	M10	10.00	8.00
		701-209	9/16	.429	.322	722-050	M11	8.00	6.30	722-111	M14	11.00	9.00
		701-210	5/8	.480	.360	722-109	M12	9.00	7.00	722-112	M16	12.00	9.00
	D = 31mm/1.220"	701-211	11/16	.542	.406	722-013	M14	11.20	9.00	722-113	M18	14.00	11.00
	L = 69mm/2.716"	701-212	3/4	.590	.442	722-014	M16	12.50	10.00	722-114	M20	16.00	12.00
		701-213	13/16	.652	.489	722-113	M18	14.00	11.00				
		701-214	7/8	.697	.523	722-113	M20	14.00	11.00				
	1/4-3/8-1/2 PIPE	701-250	1/4p	.562	.421	722-016	M22	16.00	12.50				
		701-251	3/8p	.700	.531	722-017	M24	18.00	14.00				
		701-252	1/2p	.6875	.515								
CES3B*	M14-M40 13/16-1-3/8" HAND	701-313	13/16	.652	.489	732-013	M14	11.20	9.00	732-111	M14	11.00	9.00
		701-314	7/8	.697	.523	732-014	M16	12.50	10.00	732-112	M16	12.00	9.00
		701-315	15/16	.760	.570	732-015	M18	14.00	11.00	732-015	M18	14.00	11.00
		701-316	1	.800	.600	732-015	M20	14.00	11.20	732-114	M20	16.00	12.00
		701-318	1-1/8	.896	.672	732-016	M22	16.00	12.50	732-115	M22	18.00	14.50
	D = 48mm/1.890"	701-320	1-1/4	1.021	.766	732-017	M24	18.00	14.00	732-158	M24	18.00	14.50
	L = 100.5mm/3.957"	701-322	1-3/8	1.108	.831	732-018	M27	20.00	16.00	732-018	M27	20.00	16.00
	3/4 & 1" PIPE	701-349	1/2p	.6875	.515	732-053	M30	20.00	16.00	732-117	M30	22.00	18.00
		701-350	3/4p	.906	.679	732-019	M33	22.40	18.00	732-118	M33	25.00	20.00
		701-351	1p	1.125	.843	732-020	M36	25.00	20.00	732-119	M36	28.00	22.00
CES4B*	M22-M48 1"- 1-7/8" HAND	701-424	1-1/2	1.233	.925					742-115	M22	18.00	14.50
		701-426	1-5/8	1.305	.979					742-158	M24	18.00	14.50
		701-428	1-3/4	1.430	1.072					742-018	M27	20.00	16.00
		701-430	1-7/8	1.519	1.139					742-117	M30	22.00	18.00
										742-118	M33	25.00	20.00
										742-119	M36	28.00	22.00
	D = 60mm/2.362"									742-120	M39	32.00	24.00
	L = 131mm/5.157"									742-159	M42	32.00	24.00
	1-1/4" & 1-1/2" PIPE	701-452	1-1/4p	1.3125	.984					742-121	M45	36.00	29.00
		701-453	1-1/2p	1.500	1.125					742-160	M48	36.00	29.00

* Interchangeable with WES □ B Tap Adapters.

TAPPING PROBLEMS?

CONTACT US FOR UNIQUE TAPPING SOLUTIONS.

USE HIGH PERFORMANCE TAPS FROM

DC®

THREADING TECHNOLOGY

SWISS MADE

TECHLEADER® TOOLING INC.

Tapping Collets Series ET-1

Compatible with ECX, ESX, ER, DR & RD Collets

Tapping collets series ET-1 offer the most rational and economic solution for tapping on CNC machines incorporating axial compensation in the collet. This type of collet can be used in standard collet chucks and are exclusive to Techleader. No more tapping heads necessary

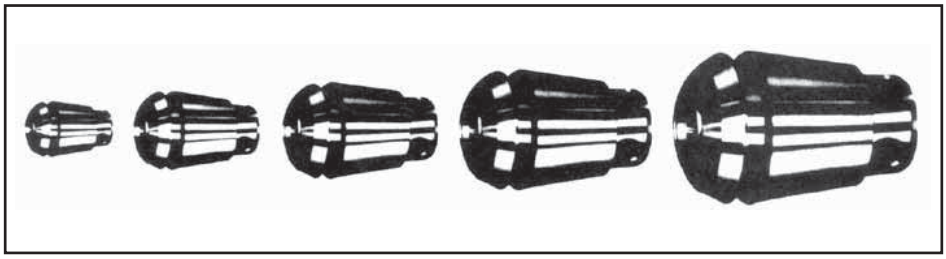

Advantages of PCM Tapping Collets

- Outside profile equivalent to ECX/ESX/ER/DR and RD collets profile; can be used with all collet holders or spindles designed for these collets
- Tapping heads and special toolholders for CNC lathes or machining centers, can be replaced by Techleader tapping collets; this offers a large reduction on investment cost.
- Can be utilized with short, medium or long collet holders, according to the machining requirements.
- Automatic extraction by standard collet nuts as for the standard collets.
- Spring force adapted to the size of the tap
- Excellent alignment of the tap; robust construction and compact design

Compatible with ECX/ESX/ER Collets

Series Nr	Capacity	Extension stroke
ET-1-12	M 0,5 - M 4 (No. 6)	5.5 mm
ET-1-16	M 0,7 - M 8 (No. 6 - No. 12)	7 mm
ET-1-20	M 1 - M 10 (No. 6 - 1/4”)	7 mm
ET-1-25	M 1 - M 12 (No. 6 - 1/2”)	8 mm
ET-1-32	M 4 - M 16 (No. 8 - 5/8”)	10 mm
ET-1-40	M 6 - M 20 (1/4” - 7/8”)	13 mm

TAPPING PROBLEMS?

CONTACT US FOR UNIQUE TAPPING SOLUTIONS.

USE HIGH PERFORMANCE TAPS FROM

DC®

THREADING TECHNOLOGY

SWISS MADE

TECHLEADER® TOOLING INC.

Tapping Collets Series ET-1

Compatible with ECX, ESX, ER, DR & RD Collets

SERIES ET-1

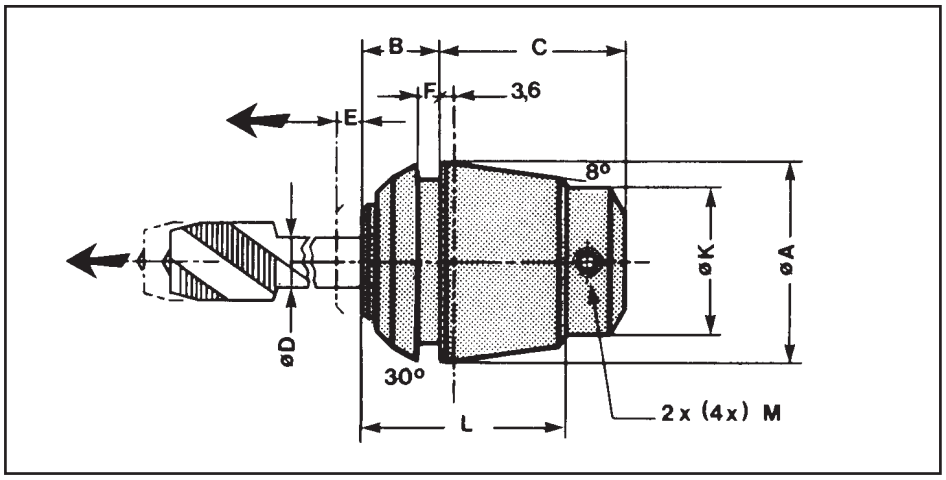

Series N°	Capacity	A	B	C	D max	E	F	K	L	M	M = UNF in USA
ET - 1 - 12 ...	M 0,5 - M 4	11,5	5	16,5	3,55	5,5	2,5	7	18	2 x M 2,5	–
ET - 1 - 16 ...	M 0,7 - M 6 (M 8)	17	7	20	6	7	2,8	11	22	2 x M 4 4 x M 4	4-48
ET - 1 - 20 ...	M 1 - M 8 (M 10)	21	8	23	7	7	2,8	14	24	2 x M 4 4 x M 5	8-36 10-32
ET - 1 - 25 ...	M 1 - M 10 (M 12)	26	10	24	9	8	3	19	26	2 x M 5 4 x M 6	10-32 1/4
ET - 1 - 32 ...	M 4 - M 12 (M 16)	33	11	32	12,5	10	3	23	33	2 x M 5 4 x M 6 4 x M 8	10-32 1/4
ET - 1 - 40 ...	M 6 - M 16 (M 20)	41	12	42	16	13	3	28	42	2 x M 6 4 x M 6 4 x M 8	1/4 5/16

Recommendations for programming

The following tapping process is recommended: fast approach, then tapping feed with approximately 95% of the pitch value, which uses 20-30% of the compensation stroke when the spindle rotation and the feed movement are simultaneously reversed. Return feed must be made with 100% of the pitch, which maintains the sleeve of the tapping collet in the compensation stroke up to the tap disengagement; quick return can then be programmed with usual strike security. The relatively long axial compensation assists easy programming. When tapping at very high speed, an appropriate programming compensation may be necessary to balance the differences of inertia between the spindle and the feed movement on reverse.
Do not disturb the axial compensation, use external coolant supply only.

Remark

The tapping capacity between ( ) indicated is for free cutting material. The clamping force given by the collet nut is the limiting factor for the tapping capacity. For high torque, a special collet nut with ball bearing can be used increasing the clamping force by 30%.

TAPPING PROBLEMS?

CONTACT US FOR UNIQUE TAPPING SOLUTIONS.

USE HIGH PERFORMANCE TAPS FROM

DC® THREADING TECHNOLOGY

SWISS MADE

TECHLEADER® TOOLING INC.

Tapping Collets Series ET-1

Compatible with ECX, ESX, ER, DR & RD Collets

For TAPS DIN 371/376

Tap Size	Tap Shank Ø	ET - 1 - 12	ET - 1 - 16	ET - 1 - 20	ET - 1 - 25	ET - 1 - 32	ET - 1 - 40
M3	2,2 mm	ET-1-12220	ET-1-16220	(ET-1-20200)			
M1 to M1.8/M3.5	2,5 mm	ET-1-12250	ET-1-16250	ET-1-20250	ET-1-25250		
M2 to M2.6/M4	2,8 mm	ET-1-12280	ET-1-16280	ET-1-20280	ET-1-25280		
M3/M5	3,5 mm	ET-1-12350	ET-1-16350	ET-1-20350	ET-1-25350		
M3.5	4 mm		ET-1-16400	ET-1-20400	ET-1-25400		
M4//M6	4,5 mm		ET-1-16450	ET-1-20450	ET-1-25450	ET-1-32450	
M5/M6/M8	6 mm		ET-1-16600	ET-1-20600	ET-1-25600	ET-1-32600	ET-1-40600
M9/M10	7 mm			ET-1-20700	ET-1-25700	ET-1-32700	ET-1-40700
M8	8 mm				ET-1-25800	ET-1-32800	ET-1-40800
M12	9 mm				ET-1-25900	ET-1-32900	ET-1-40900
M10	10 mm					ET-1-32100	ET-1-40100
M14	11 mm					ET-1-32110	ET-1-40110
M16	12 mm					ET-1-32120	ET-1-40120
M18	14 mm						ET-1-40140
M20	16 mm						ET-1-40160

For TAPS according to US standard

Tap Size	Tap Shank Ø	ET - 1 - 12	ET - 1 - 16	ET - 1 - 20	ET - 1 - 25	ET - 1 - 32	ET - 1 - 40
No. 6	0.141”	ET-1-12.141	ET-1-16.141	ET-1-20.141	ET-1-25.141		
No. 8	0.168”		ET-1-16.168	ET-1-20.168	ET-1-25.168	ET-1-32.168	
No. 10	0.194”		ET-1-16.194	ET-1-20.194	ET-1-25.194	ET-1-32.194	
No. 12	0.220”		ET-1-16.220	ET-1-20.220	ET-1-25.220	ET-1-32.220	
1/4”	0.255”			ET-1-20.255	ET-1-25.255	ET-1-32.255	ET-1-40.255
5/16”	0.318”				ET-1-25.318	ET-1-32.318	ET-1-40.318
7/16”	0.323”				ET-1-25.323	ET-1-32.323	ET-1-40.323
.1/2”	0.367”				ET-1-25.367	ET-1-32.367	ET-1-40.367
3/8”	0.381”				ET-1-25.381	ET-1-32.381	ET-1-40.381
9/16”	0.429”					ET-1-32.429	ET-1-40.429
1/8” PLS	0.437”					ET-1-32.437	ET-1-40.437
5/8”	0.480”					ET-1-32.480	ET-1-40.480
11/16”	0.542”						ET-1-40.542
1/4P	0.562”						ET-1-40.562
3/4”	0.590”						ET-1-40.590
13/16”	0.652”						ET-1-40.652
7/8”	0.697”						ET-1-40.697

TAPPING PROBLEMS?

CONTACT US FOR UNIQUE TAPPING SOLUTIONS.

USE HIGH PERFORMANCE TAPS FROM

DC®

THREADING TECHNOLOGY

SWISS MADE

TECHLEADER® TOOLING INC.

Tapping Collets Series RT-1

Compatible with ORTLIEB Full Grip Collets – DIN 6388

Tapping Collets Series RT-1

The most rational and economic solution for tapping on CNC machines incorporating axial compensation in the collet. This type of tapping collet can be used in all standard Weldon and VDI toolholders, or other toolholders with adapted bore. No more specific tapping heads necessary. A PCM exclusivity.

Advantages of PCM-Weldon Tapping Collets

- Outside profile equivalent to Weldon shanks (ISO 3338-2).
- Use in toolholders with all machines attachments:
  ANSI - CAT - BT - DIN 69871 - ISO 7388 - VDI 3425-2 / DIN 69880.
- Super-compact execution or long version to approach very close to high shoulders.
- Heavy tapping torques are controlled by the strong clamping screws.
- Quick change, robust construction and excellent alignment of the tap
- Spring force adapted to the size of the taps
- Strong execution case hardened and ground

Use of Standard Nuts (DIN 6388)

The ball nuts are recommended for heavy tapping operations.
Assembling recommendations:

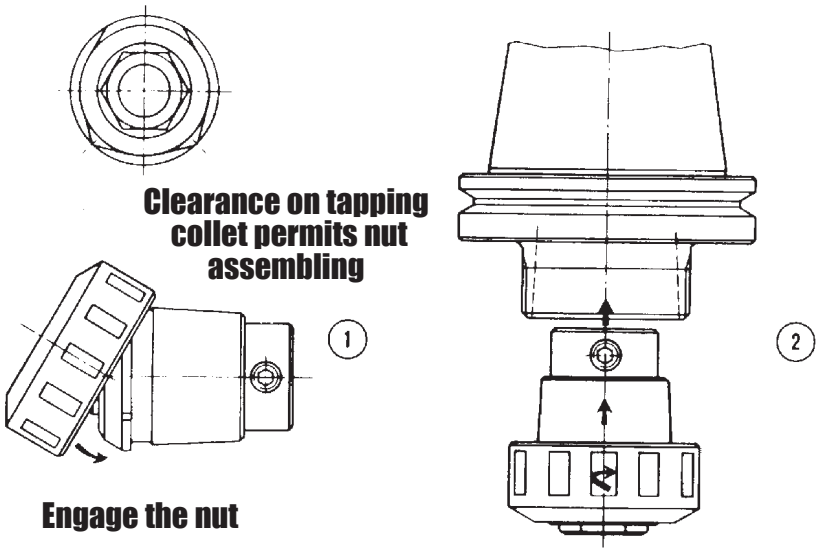

TAPPING PROBLEMS?

CONTACT US FOR UNIQUE TAPPING SOLUTIONS.

USE HIGH PERFORMANCE TAPS FROM

DC® THREADING TECHNOLOGY

SWISS MADE

TECHLEADER® TOOLING INC.

Tapping Collets Series RT-1

Compatible with ORTLIEB Full Grip Collets – DIN 6388

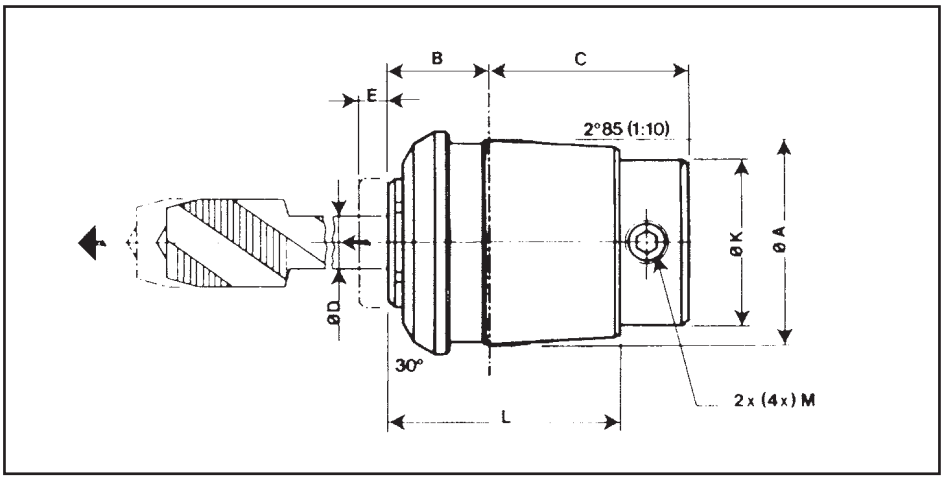

Tapping Collets Series RT-1

Series N°	Capacity	A	B	C	D max	E	K	L	Thread M	Thread M = UNF in USA
RT - 1 - 61	M0,7-M8	15,15	9	18	6	7	11	22	2 x M4 4 x M4	4-48
RT - 1 - 62	M1 - M10	17,75	9,5	21,5	7	7	14	24	2 x M4 4 x M5	8-36 10-32
RT - 1 - 63	M1 - M12	22,65	12,5	22	9	8	19	26	2 x M5 4 x M6	10-32 1/4
RT - 1 - 64	M4 - M16	27,4	14	29	12,5	10	23	33	2 x M5 4 x M6/M8	10-32 1/4
RT - 1 - 65	M6 - M20	32,9	14	38	16	13	28	40	2 x M 6 4 x M6/M8	1/4 5/16

Recommendations for programming

The following tapping process is recommended: fast approach, then tapping feed with approximately 95% of the pitch value, which uses 20-30% of the compensation stroke when the spindle rotation and the feed movement are simultaneously reversed. Return feed must be made with 100% of the pitch, which maintains the sleeve of the tapping collet in the compensation stroke up to the tap disengagement; quick return can then be programmed with usual strike security. The relatively long axial compensation assists easy programming. When tapping at very high speed, an appropriate programming compensation may be necessary to balance the differences of inertia between the spindle and the feed movement on reverse. Do not disturb the axial compensation, use external coolant supply only.

TAPPING PROBLEMS?

CONTACT US FOR UNIQUE TAPPING SOLUTIONS.

USE HIGH PERFORMANCE TAPS FROM

DC®

THREADING TECHNOLOGY

SWISS MADE

TECHLEADER® TOOLING INC.

Tapping Collets Series RT-1

Compatible with ORTLIEB Full Grip Collets – DIN 6388

For TAPS DIN 371/376

Tap Size	Tap Shank Ø	RT - 1 - 61	RT - 1 - 62	RT - 1 - 63	RT - 1 - 64	RT - 1 - 65
M3	2,2 mm	RT-1-61220	(RT-1-62220)			
M1 to M1.8/M3.5	2.5 mm	RT-1-61250	RT-1-62250	RT-1-63250		
M2 to M2.6/M4	2,8 mm	RT-1-61280	RT-1-62280	RT-1-63280		
M3/M5	3,5 mm	RT-1-61350	RT-1-62350	RT-1-63350		
M3.5	4 mm	RT-1-61400	RT-1-62400	RT-1-63400		
M4//M6	4,5 mm	RT-1-61450	RT-1-62450	RT-1-63450	RT-1-64450	
M5/M6/M8	6 mm	RT-1-61600	RT-1-62600	RT-1-63600	RT-1-64600	RT-1-65600
M9/M10	7 mm		RT-1-62700	RT-1-63700	RT-1-64700	RT-1-65700
M8	8 mm			RT-1-63800	RT-1-64800	RT-1-65800
M12	9 mm			RT-1-63900	RT-1-64900	RT-1-65900
M10	10 mm				RT-1-64100	RT-1-65100
M14	11 mm				RT-1-64110	RT-1-65110
M16	12 mm				RT-1-64120	RT-1-65120
M18	14 mm					RT-1-65140
M20	16 mm					RT-1-65160

For TAPS according to US standard

Tap Size	Tap Shank Ø	RT - 1 - 61	RT - 1 - 62	RT - 1 - 63	RT - 1 - 64	RT - 1 - 65
No. 6	0.141”	RT-1-61.141	RT-1-62.141	RT-1-63.141		
No. 8	0.168”	RT-1-61.168	RT-1-62.168	RT-1-63.168	RT-1-64.168	
No. 10	0.194”	RT-1-61.194	RT-1-62.194	RT-1-63.194	RT-1-64.194	
No. 12	0.220”	RT-1-61.220	RT-1-62.220	RT-1-63.220	RT-1-64.220	
1/4”	0.255”		RT-1-62.255	RT-1-63.255	RT-1-64.255	RT-1-65.255
5/16”	0.318”			RT-1-63.318	RT-1-64.318	RT-1-65.318
7/16”	0.323”			RT-1-63.323	RT-1-64.323	RT-1-65.323
.1/2”	0.367”			RT-1-63.367	RT-1-64.367	RT-1-65.367
3/8”	0.381”			RT-1-63.381	RT-1-64.381	RT-1-65.381
9/16”	0.429”				RT-1-64.429	RT-1-65.429
1/8” PLS	0.437”				RT-1-64.437	RT-1-65.437
5/8”	0.480”				RT-1-64.480	RT-1-65.480
11/16”	0.542”					RT-1-65.542
1/4” P	0.562”					RT-1-65.562
3/4”	0.590”					RT-1-65.590
13/16”	0.652”					RT-1-65.652
7/8”	0.697”					RT-1-65.697

TAPPING PROBLEMS?

CONTACT US FOR UNIQUE TAPPING SOLUTIONS.

USE HIGH PERFORMANCE TAPS FROM

DC®

THREADING TECHNOLOGY

SWISS MADE

TECHLEADER® TOOLING INC.

KATO TC Tap Chucks

Adjustable Torque Control Tap Collet

TC412

adapter size	tap size range	tap size	order no.
TC412	0-5/8" HAND	0-6	810-100
		8	810-101
		10	810-102
		12	810-103
		1/4	810-104
		5/16	810-105
		3/8	810-106
		7/16	810-107
		1/2	810-108
		9/16	810-109
	1/16-3/8" PIPE	5/8	810-110
		1/16P	810-149
		1/8LS	810-151
		1/4P	810-152
		3/8P	810-153

TC1022

adapter size	tap size range	tap size	order no.
TC1022	3/8-1" HAND	3/8	810-206
		7/16	810-207
		1/2	810-208
		9/16	810-209
		5/8	810-210
		11/16	810-211
		3/4	810-212
		13/16	810-213
		7/8	810-214
		15/16	810-215
	1/8-3/4" PIPE	1	810-216
		1/8LS	810-249
		1/4P	810-250
		3/8P	810-251
		1/2P	810-252
		3/4P	810-253

TAPPING PROBLEMS?

CONTACT US FOR UNIQUE TAPPING SOLUTIONS.

USE HIGH PERFORMANCE TAPS FROM

DC®

THREADING TECHNOLOGY

SWISS MADE

TECHLEADER® TOOLING INC.

R8 Collets

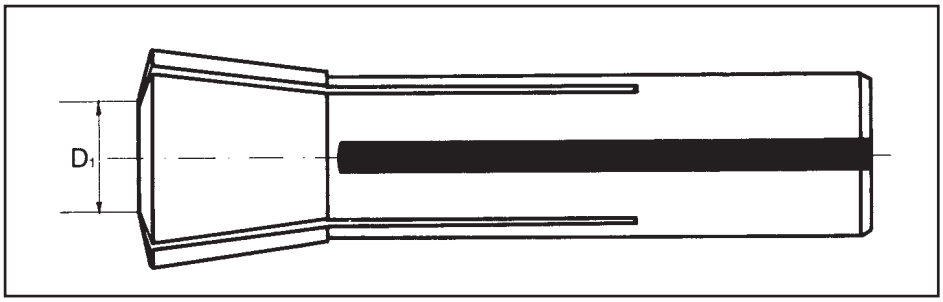

To order our Standard Precision R8 Round Collets, add a '-E' at the end of the order numbers

Round Collets - Inch

Order No.	Size D_1 (in)	Order No.	Size D_1 (in)
080-004	1/16	080-032	1/2
080-006	3/32	080-034	17/32
080-008	1/8	080-036	9/16
080-010	5/32	080-038	19/32
080-012	3/16	080-040	5/8
080-014	7/32	080-042	21/32
080-016	1/4	080-044	11/16
080-018	9/32	080-046	23/32
080-020	5/16	080-048	3/4
080-022	11/32	080-050	25/32
080-024	3/8	080-052	13/16
080-046	13/32	080-054	27/32
080-028	7/16	080-056	7/8
080-030	15/32	080-064	1

Metric

Order No.	Size D_1 (mm)	Order No.	Size D_1 (mm)
080-503	3	080-511	11
080-504	4	080-512	12
080-505	5	080-513	13
080-506	6	080-514	14
080-507	7	080-515	15
080-508	8	080-516	16
080-509	9	080-517	17
080-510	10	080-518	18
		080-520	20

Emergency Collets

Order No.	Description
080-000S	Steel Construction

Emergency Collets have 1/16" pilot hole.

NMTB 40 Coupling Collets

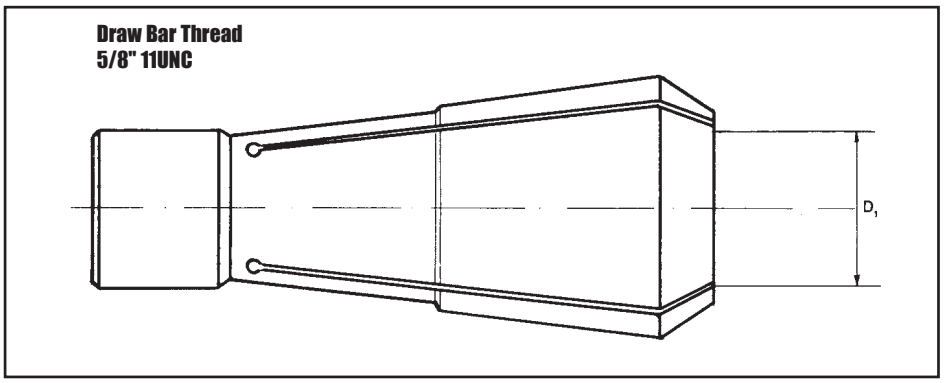

NMTB40 Coupling Collets

Order No.	Size D_1 (in)	Order No.	Size D_1 (in)	Order No.	Size D_1 (in)
510-408	1/8	510-428	7/16	510-448	3/4
510-412	3/16	510-432	1/2	510-452	13/16
510-416	1/4	510-436	9/16	510-456	7/8
510-420	5/16	510-440	5/8	510-460	15/16
510-424	3/8	510-444	11/16	510-464	1

TECHLEADER® TOOLING INC.

5C Collets

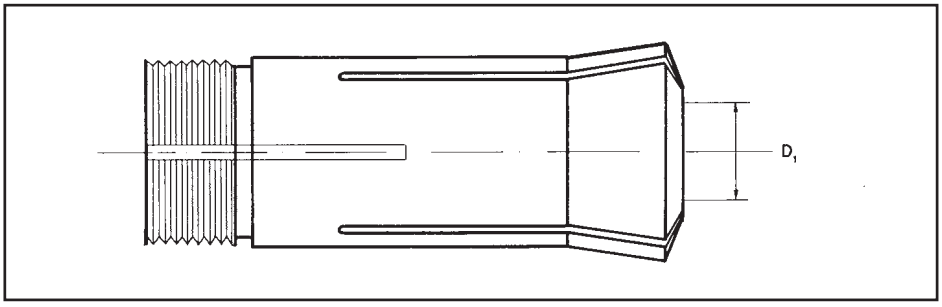

Super Precision Style - Round

To order our Standard Precision 5C Round Collets, add a '-E' at the end of the order numbers

Order No.	Size D_1 (in)	Order No.	Size D_1 (in)	Order No.	Size D_1 (in)	Order No.	Size D_1 (in)
050-003	3/64	050-021	21/64	050-039	39/64	050-056	7/8
050-004	1/16	050-022	11/32	050-040	5/8	050-057	57/64
050-005	5/64	050-023	23/64	050-041	41/64	050-058	29/32
050-006	3/32	050-024	3/8	050-042	21/32	050-059	59/64
050-007	7/64	050-025	25/64	050-043	43/64	050-060	15/16
050-008	1/8	050-026	13/32	050-044	11/16	050-061	61/64
050-009	9/64	050-027	27/64	050-045	45/64	050-062	31/32
050-010	5/32	050-028	7/16	050-046	23/32	050-063	63/64
050-011	11/64	050-029	29/64	050-047	47/64	050-064	1
050-012	3/16	050-030	15/32	050-048	3/4	050-065	1-1/64
050-013	13/64	050-031	31/64	050-049	49/64	050-066	1-1/32
050-014	7/32	050-032	1/2	050-050	25/32	050-067	1-3/64
050-015	15/64	050-033	33/64	050-051	51/64	050-068	1-1/16
050-016	1/4	050-034	17/32	050-052	13/16	050-069	1-5/64
050-017	17/64	050-035	35/64	050-053	53/64	050-070	1-3/32
050-018	9/32	050-036	9/16	050-054	27/32	050-071	1-7/64
050-019	19/64	050-037	37/64	050-055	55/64	050-072	1-1/8
050-020	5/16	050-038	19/32				

Round Metric, Hexagon, Square, Emergency and Step Collets

Round Metric

Order No.	Size D_1 (mm)	Order No.	Size D_1 (mm)
050-503	3	050-515	15
050-504	4	050-516	16
050-505	5	050-517	17
050-506	6	050-518	18
050-507	7	050-519	19
050-508	8	050-520	20
050-509	9	050-521	21
050-510	10	050-522	22
050-511	11	050-523	23
050-512	12	050-524	24
050-513	13	050-525	25
050-514	14	050-526	26

Metric collets are also available in 0.5 mm increments on request.

1) **Emergency collets have 1/16" pilot hole and has hardened threads.**
2) **Step collets have soft face (for easy machining), hardened body, no internal threads.**

5C Collets have external and internal threads.

*** These collets do not have internal thread.**

Hexagon

Order No.	Size D_1 (mm)	Order No.	Size D_1 (mm)
050-008-H	1/8	050-036-H	9/16
050-012-H	3/16	050-040-H	5/8
050-016-H	1/4	050-044-H	11/16
050-020-H	5/16	050-048-H	3/4
050-024-H	3/8	050-052-H	13/16
050-028-H	7/16	050-056-H	7/8*
050-032-H	1/2		

Square

Order No.	Size D_1 (in)	Order No.	Size D_1 (in)
050-008-S	1/8	050-032-S	1/2
050-012-S	3/16	050-036-S	9/16
050-016-S	1/4	050-040-S	5/8
050-020-S	5/16	050-044-S	11/16
050-024-S	3/8	050-048-S	3/4
050-028-S	7/16		

Emergency Collets (1)

Order No.	Description
050-000-S	STEEL
050-000-B	BRASS

Step Collets (2)

Order No.	Size (in)
050-102	2
050-103	3
050-104	4
050-105	5
050-106	6

TECHLEADER® TOOLING INC.

3J Collets

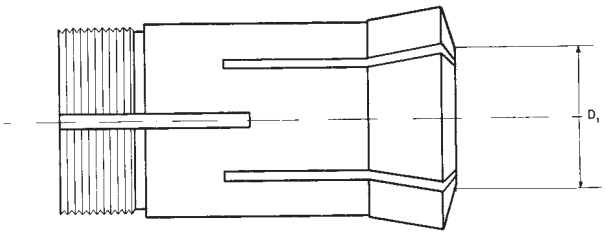

Round

Order No.	Size D_1 (in)	Order No.	Size D_1 (in)	Order No.	Size D_1 (in)	Order No.	Size D_1 (in)
300-004	1/16	300-022	11/32	300-040	5/8	300-058	29/32
300-005	5/64	300-023	23/64	300-041	41/64	300-059	59/64
300-006	3/32	300-024	3/8	300-042	21/32	300-060	15/16
300-007	7/64	300-025	25/64	300-043	43/64	300-061	61/64
300-008	1/8	300-026	13/32	300-044	11/16	300-062	31/32
300-009	9/64	300-027	27/64	300-045	45/64	300-063	63/64
300-010	5/32	300-028	7/16	300-046	23/32	300-064	1
300-011	11/64	300-029	29/64	300-047	47/64	300-068	1-1/16
300-012	3/16	300-030	15/32	300-048	3/4	300-072	1-1/8
300-013	13/64	300-031	31/64	300-049	49/64	300-076	1-3/16
300-014	7/32	300-032	1/2	300-050	25/32	300-080	1-1/4
300-015	15/64	300-033	33/64	300-051	51/64	300-084	1-5/16
300-016	1/4	300-034	17/32	300-052	13/16	300-088	1-3/8
300-017	17/64	300-035	35/64	300-053	53/64	300-092	1-7/16
300-018	9/32	300-036	9/16	300-054	27/32	300-096	1-1/2
300-019	19/64	300-037	37/64	300-055	55/64	300-100	1-9/16
300-020	5/16	300-038	19/32	300-056	7/8	300-104	1-5/8
300-021	21/64	300-039	39/64	300-057	57/64	300-108	1-11/16
						300-112	1-3/4

Hexagon, Square and Emergency Collets

Hexagon

Order No.	Size D_1 (in)	Order No.	Size D_1 (in)
300-016-H	1/4	300-060-H	15/16
300-020-H	5/16	300-064-H	1
300-024-H	3/8	300-068-H	1-1/16
300-028-H	7/16	300-072-H	1-1/8
300-032-H	1/2	300-076-H	1-3/16
300-036-H	9/16	300-080-H	1-1/4
300-040-H	5/8	300-084-H	1-5/16
300-044-H	11/16	300-088-H	1-3/8
300-048-H	3/4	300-092-H	1-7/16
300-052-H	13/16	300-096-H	1-1/2
300-056-H	7/8		

Emergency Collets have 1/16" pilot hole and hardened threads.

Square

Order No.	Size D_1 (in)	Order No.	Size D_1 (in)
300-016-S	1/4	300-052-S	13/16
300-020-S	5/16	300-056-S	7/8
300-024-S	3/8	300-060-S	15/16
300-028-S	7/16	300-064-S	1
300-032-S	1/2	300-068-S	1-1/16
300-036-S	9/16	300-072-S	1-1/8
300-040-S	5/8	300-076-S	1-3/16
300-044-S	11/16	300-080-S	1-1/4
300-048-S	3/4		

Emergency Collets

Order No.	Description
300-000-S	Steel Construction

TECHLEADER® TOOLING INC.

16C Collets

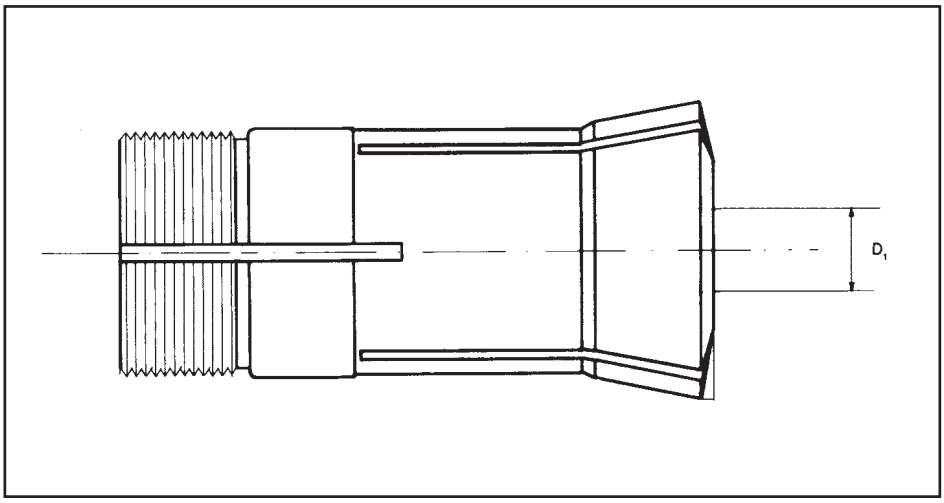

Round Smooth

Order No.	Size D_1 (in)	Order No.	Size D_1 (in)	Order No.	Size D_1 (in)
160-004	1/16	160-038	19/32	160-072	1-1/8
160-005	5/64	160-039	39/64	160-073	1-9/64
160-006	3/32	160-040	5/8	160-074	1-5/32
160-007	7/64	160-041	41/64	160-075	1-11/64
160-008	1/8	160-042	21/32	160-076	
160-009	9/64	160-043	43/64	1-3/16	
160-010	5/32	160-044	11/16	160-077	1-13/64
160-011	11/64	160-045	45/64	160-078	1-7/32
160-012	3/16	160-046	23/32	160-079	1-15/64
160-013	13/64	160-047	47/64	160-080	1-1/4
160-014	7/32	160-048	3/4	160-081	1-17/64
160-015	15/64	160-049	49/64	160-082	1-9/32
160-016	1/4	160-050	25/32	160-083	1-19/64
160-017	17/64	160-051	51/64	160-084	1-5/16
160-018	9/32	160-052	13/16	160-085	1-21/64
160-019	19/64	160-053	53/64	160-086	1-11/32
160-020	5/16	160-054	27/32	160-087	1-23/64
160-021	21/64	160-055	55/64	160-088	1-3/8
160-022	11/32	160-056	7/8	160-089	1-25/64
160-023	23/64	160-057	57/64	160-090	1-13/32
160-024	3/8	160-058	29/32	160-091	1-27/64
160-025	25/64	160-059	59/64	160-092	1-7/16
160-026	13/32	160-060	15/16	160-093	1-29/64
160-027	27/64	160-061	61/64	160-094	1-15/32
160-028	7/16	160-062	31/32	160-095	1-31/64
160-029	29/64	160-063	63/64	160-096	1-1/2
160-030	15/32	160-064	1	160-097	1-33/64
160-031	31/64	160-065	1-1/64	160-098	1-17/32
160-032	1/2	160-066	1-1/32	160-099	1-35/64
160-033	33/64	160-067	1-3/64	160-100	1-9/16
160-034	17/32	160-068	1-1/16	160-101	1-37/64
160-035	35/64	160-069	1-5/64	160-102	1-19/32
160-036	9/16	160-070	1-3/32	160-103	1-39/64
160-037	37/64	160-071	1-7/64	160-104	1-5/8

TECHLEADER® TOOLING INC.

16C Collets

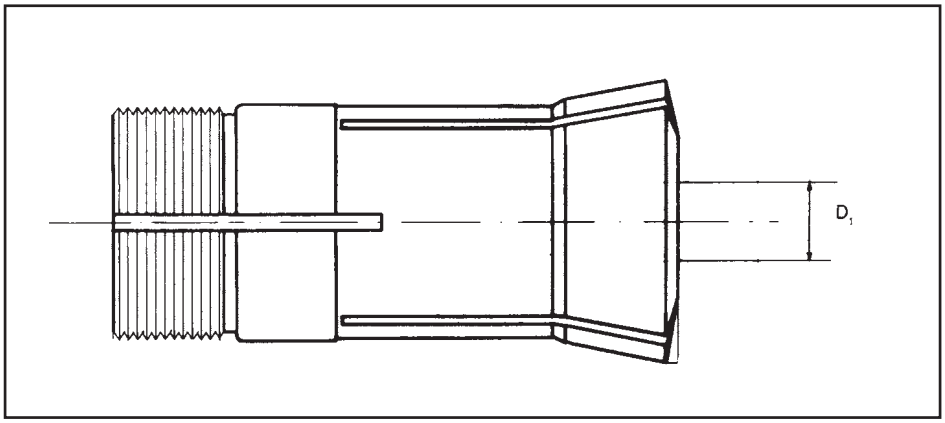

Round Metric, Round Serrated, Hexagon, Square and Emergency Collet

Round Metric

Order No.	Size D_1 (mm)	Order No.	Size D_1 (mm)
160-501	1	160-522	22
160-502	2	160-523	23
160-503	3	160-524	24
160-504	4	160-525	25
160-505	5	160-526	26
160-506	6	160-527	27
160-507	7	160-528	28
160-508	8	160-529	29
160-509	9	160-530	30
160-510	10	160-531	31
160-511	11	160-532	32
160-512	12	160-533	33
160-513	13	160-534	34
160-514	14	160-535	35
160-515	15	160-536	36
160-516	16	160-537	37
160-517	17	160-538	38
160-518	18	160-539	39
160-519	19	160-540	40
160-520	20	160-541	41
160-521	21	160-542	42

Square

Order No.	Size D_1 (mm)	Order No.	Size D_1 (in)
160-008-S	1/8	160-044-S	11/16
160-012-S	3/16	160-048-S	3/4
160-016-S	1/4	160-052-S	13/16
160-020-S	5/16	160-056-S	7/8
160-024-S	3/8	160-060-S	15/16
160-028-S	7/16	160-064-S	1
160-032-S	1/2	160-068-S	1-1/16
160-036-S	9/16	160-072-S	1-1/8
160-040-S	5/8	160-076-S	1-3/16

Round Serrated

Order No.	Size D_1 (mm)	Order No.	Size D_1 (mm)
160-048-SE	3/4	160-076-SE	1-3/16
160-050-SE	25/32	160-078-SE	1-7/32
160-052-SE	13/16	160-080-SE	1-1/4
160-054-SE	27/32	160-082-SE	1-9/32
160-056-SE	7/8	160-084-SE	1-5/16
160-058-SE	29/32	160-086-SE	1-11/32
160-060-SE	15/16	160-088-SE	1-3/8
160-062-SE	31/32	160-090-SE	1-13/32
160-064-SE	1	160-092-SE	1-7/16
160-066-SE	1-1/32	160-094-SE	1-15/32
160-068-SE	1-1/16	160-096-SE	1-1/2
160-070-SE	1-3/32	160-098-SE	1-17/32
160-072-SE	1-1/8	160-100-SE	1-9/16
160-074-SE	1-5/32	160-102-SE	1-19/32

Hexagon

Order No.	Size D_1 (mm)	Order No.	Size D_1 (mm)
160-008-H	1/8	160-052-H	13/16
160-012-H	3/16	160-056-H	7/8
160-016-H	1/4	160-060-H	15/16
160-020-H	5/16	160-064-H	1
160-024-H	3/8	160-068-H	1-1/16
160-028-H	7/16	160-072-H	1-1/8
160-032-H	1/2	160-076-H	1-3/16
160-036-H	9/16	160-080-H	1-1/4
160-040-H	5/8	160-084-H	1-5/16
160-044-H	11/16	160-088-H	1-3/8
160-048-H	3/4		

Emergency Collets

Order No.	Description
160-000-S	Steel Construction

TECHLEADER® TOOLING INC.

Wide Range Multibore Standard Crawford Collets

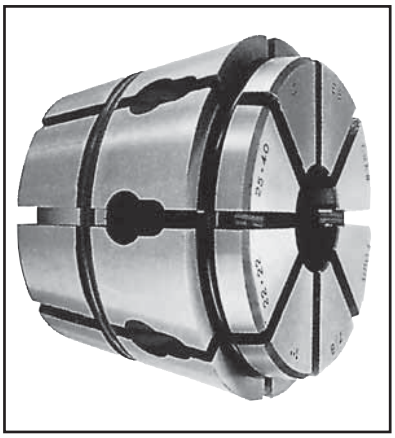

W850

L_1 = Total Length = 51.8 mm **A = Max. Dia = 70.1 mm**

CLAMPING RANGE		ROUND	HEXAGON	SQUARE
Inches (in)	Metric (mm)	Order No.	Order No.	Order No.
1/16 to 3/16	1.58 to 4.76	W850-C1	W850-C68	W850-C86
1/8 to 1/4	3.17 to 6.35	W850-C2	W850-C69	W850-C87
1/4 to 3/8	6.35 to 9.52	W850-C3	W850-C70	W850-C88
3/8 to 1/2	9.52 to 12.70	W850-C4	W850-C71	W850-C89
1/2 to 5/8	12.70 to 15.87	W850-C5	W850-C72	W850-C90
5/8 to 3/4	15.87 to 19.05	W850-C6	W850-C73	W850-C91
3/4 to 7/8	19.05 to 22.22	W850-C7	W850-C74	W850-C92
7/8 to 1	22.22 to 25.40	W850-C8	W850-C75	W850-C93
1 to 1-1/8	25.40 to 28.57	W850-C9	W850-C76	W850-C94
1-1/8 to 1-1/4	28.57 to 31.75	W850-C10	W850-C77	W850-C95
1-1/4 to 1-3/8	31.75 to 34.92	W850-C11	W850-C78	–
1-3/8 to 1-1/2	34.92 to 38.10	W850-C12	W850-C79	–
1-1/2 to 1-5/8	38.10 to 41.27	W850-C13	–	–
1.535 to 1.653	39.0 to 42.00	W850-C14	–	–

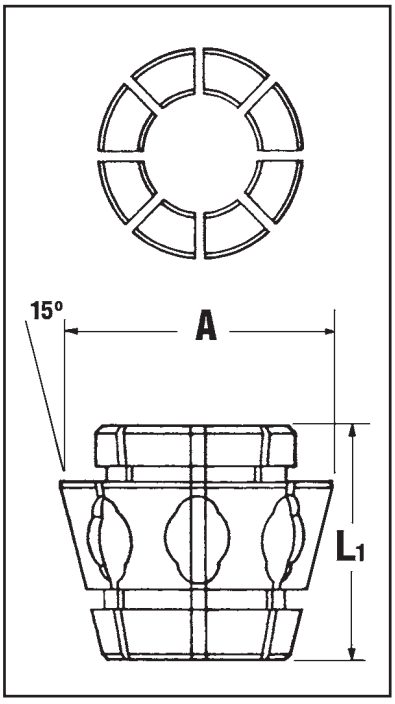

V120

L_1 = Total Length = 62.7 mm **A = Max. Dia = 88.0 mm**

CLAMPING RANGE		ROUND	HEXAGON	SQUARE
Inches (in)	Metric (mm)	Order No.	Order No.	Order No.
1/8 to 1/4	3.17 to 6.35	V120-D2	V120-D69	V120-D87
1/4 to 3/8	6.35 to 9.52	V120-D3	V120-D70	V120-D88
3/8 to 1/2	9.52 to 12.70	V120-D4	V120-D71	V120-D89
1/2 to 5/8	12.70 to 15.87	V120-D5	V120-D72	V120-D90
5/8 to 3/4	15.87 to 19.05	V120-D6	V120-D73	V120-D91
3/4 to 7/8	19.05 to 22.22	V120-D7	V120-D74	V120-D92
7/8 to 1	22.22 to 25.40	V120-D8	V120-D75	V120-D93
1 to 1-1/8	25.40 to 28.57	V120-D9	V120-D76	V120-D94
1-1/8 to 1-1/4	28.57 to 31.75	V120-D10	V120-D77	V120-D95
1-1/4 to 1-3/8	31.75 to 34.92	V120-D11	V120-D78	V120-D96
1-3/8 to 1-1/2	34.92 to 38.10	V120-D12	V120-D79	V120-D97
1-1/2 to 1-5/8	38.10 to 41.27	V120-D13	V120-D80	V120-D98
1-5/8 to 1-3/4	41.27 to 44.45	V120-D14	V120-D81	–
1-3/4 to 1-7/8	44.45 to 47.62	V120-D15	V120-D82	–
1-7/8 to 2	47.62 to 50.80	V120-D16	V120-D83	–
2 to 2-1/8	50.80 to 53.97	V120-D17	–	–

TECHLEADER® TOOLING INC.

Wide Range Multibore Standard Crawford Collets

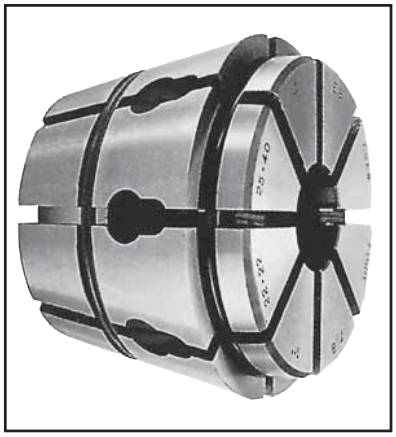

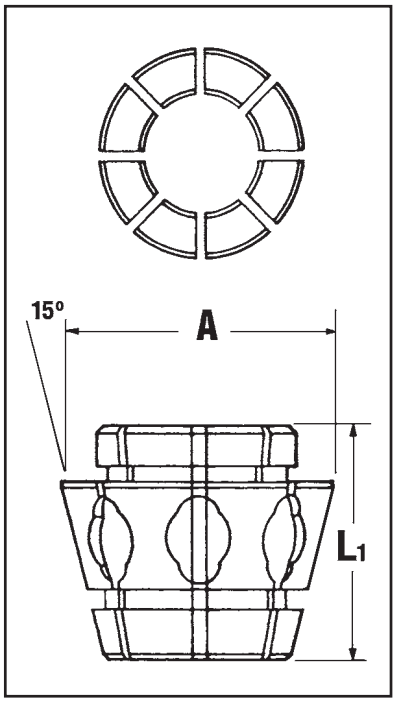

T285

L_1 = Total Length = 73.2mm **A = Max. Dia = 99.3 mm**

CLAMPING RANGE		ROUND	HEXAGON	SQUARE
Inches (in)	Metric (mm)	Order No.	Order No.	Order No.
1/8 to 1/4	3.17 to 6.35	T285-E2	T285-E69	T285-E87
1/4 to 3/8	6.35 to 9.52	T285-E3	T285-E70	T285-E88
3/8 to 1/2	9.52 to 12.70	T285-E4	T285-E71	T285-E89
1/2 to 5/8	12.70 to 15.87	T285-E5	T285-E72	T285-E90
5/8 to 3/4	15.87 to 19.05	T285-E6	T285-E73	T285-E91
3/4 to 7/8	19.05 to 22.22	T285-E7	T285-E74	T285-E92
7/8 to 1	22.22 to 25.40	T285-E8	T285-E75	T285-E93
1 to 1-1/8	25.40 to 28.57	T285-E9	T285-E76	T285-E94
1-1/8 to 1-1/4	28.57 to 31.75	T285-E10	T285-E77	T285-E95
1-1/4 to 1-3/8	31.75 to 34.92	T285-E11	T285-E78	T285-E96
1-3/8 to 1-1/2	34.92 to 38.10	T285-E12	T285-E79	T285-E97
1-1/2 to 1-5/8	38.10 to 41.27	T285-E13	T285-E80	T285-E98
1-5/8 to 1-3/4	41.27 to 44.45	T285-E14	T285-E81	T285-E99
1-3/4 to 1-7/8	44.45 to 47.62	T285-E15	T285-E82	–
1-7/8 to 2	47.62 to 50.80	T285-E16	T285-E83	–
2 to 2-1/8	50.80 to 53.97	T285-E17	T285-E84	–
2-1/8 to 2-1/4	53.97 to 57.15	T285-E18	T285-E85	–
2-1/4 to 2 3/8	57.15 to 60.32	T285-E19	–	–
2-3/8 to 2-1/2	60.32 to 63.50	T285-E20	–	–
2-1/2 to 2-5/8	63.50 to 66.67	T285-E21	–	–

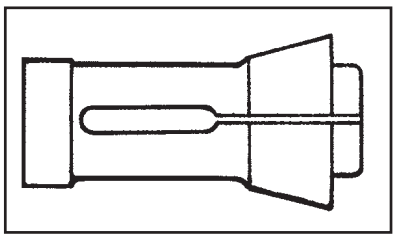

EMERGENCY COLLETS

Order No.	Multibore Style Equiv.	Description
M286-000-S	W850	STEEL
N853-000-S	V120	STEEL
K247-000-S	T285	STEEL

TECHLEADER® TOOLING INC.

Wide Range Multibore DIN 6343 Collets

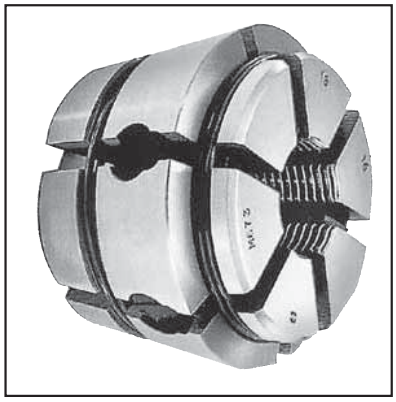

M671

L_1 = Total Length = 38.0 mm **A = Max. Dia = 56.5 mm**

CLAMPING RANGE	ROUND	HEXAGON	SQUARE
Metric (mm)	Order No.	Order No.	Order No.
4 to 6	M671 - R6*	M671- H6*	M671- S6*
6 to 8	M671 - R8*	M671- H8*	M671- S8*
8 to 10	M671 - R10	M671- H10	M671- S10
10 to 12	M671 - R12	M671- H12	M671- S12
12 to 14	M671 - R14	M671- H14	M671- S14
14 to 16	M671 - R16	M671- H16	M671- S16
16 to 18	M671 - R18	M671- H18	M671- S18
18 to 20	M671 - R20	M671- H20	M671- S20
20 to 22	M671 - R22	M671- H22	M671- S22
22 to 24	M671 - R24	M671- H24	M671- S24
24 to 26	M671 - R26	M671 -H26	–
26 to 28	M671 - R28	M671- H28	–
28 to 30	M671 - R30	–	–
30 to 32	M671 - R32	–	–
32 to 34	M671 - R34*	–	–

M673

L_1 = Total Length = 39.0 mm **A = Max. Dia = 61.5 mm**

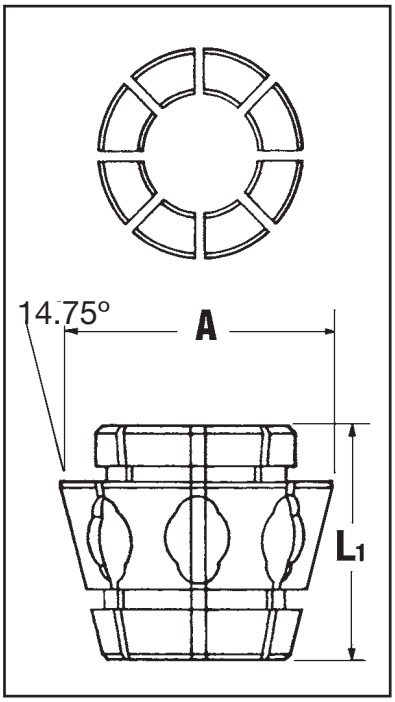

CLAMPING RANGE	ROUND	HEXAGON	SQUARE
Metric (in)	Order No.	Order No.	Order No.
4 to 6	M673- R6*	M673- H6*	M673- S6*
6 to 8	M673- R8*	M673- H8*	M673- S8*
8 to 10	M673- R10	M673- H10	M673- S10
10 to 12	M673- R12	M673- H12	M673- S12
12 to 14	M673- R14	M673- H14	M673- S14
14 to 16	M673- R16	M673- H16	M673- S16
16 to 18	M673- R18	M673- H18	M673- S18
18 to 20	M673- R20	M673- H20	M673- S20
20 to 22	M673- R22	M673- H22	M673- S22
22 to 24	M673- R24	M673- H24	M673- S24
24 to 26	M673- R26	M673- H26	M673- S26
26 to 28	M673- R28	M673- H28	M673- S28
28 to 30	M673- R30	M673- H30	M673- S30
30 to 32	M673- R32	M673- H32	–
32 to 34	M673- R34	M673- H34	–
34 to 36	M673- R36	M673- H36	–
36 to 38	M673- R38	–	–
38 to 40	M673- R40	–	–
40 to 42	M673- R42*	–	–

*Hexagon and Square collets and those marked * can only be supplied with plain bore or annular serrations, the remainder being available with spiral serrations. Please write for details for heavy duty Auto-Multibore collets.

TECHLEADER® TOOLING INC.

Wide Range Multibore DIN 6343 Collets

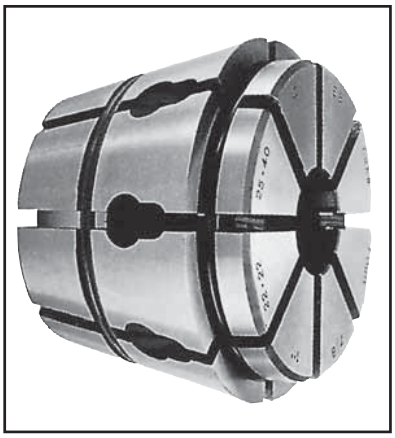

M677

L_1 = Total Length = 45.0 mm **A = Max. Dia = 85.5 mm**

CLAMPING RANGE	ROUND	HEXAGON	SQUARE
Metric (mm)	Order No.	Order No.	Order No.
6 to 8	M677- R8*	M677- H8*	M677- S8*
8 to 10	M677- R10	M677- H10	M677- S10
10 to 12	M677- R12	M677- H12	M677- S12
12 to 14	M677- R14	M677- H14	M677- S14
14 to 16	M677- R16	M677- H16	M677- S16
16 to 18	M677- R18	M677- H18	M677- S18
18 to 20	M677- R20	M677- H20	M677- S20
20 to 22	M677- R22	M677- H22	M677- S22
22 to 24	M677- R24	M677- H24	M677- S24
24 to 26	M677- R26	M677- H26	M677- S26
26 to 28	M677- R28	M677- H28	M677- S28
28 to 30	M677- R30	M677- H30	M677- S30
30 to 32	M677- R32	M677- H32	M677- S32
32 to 34	M677- R34	M677- H34	M677- S34
34 to 38	M677- R36	M677- H36	M677- S36
36 to 38	M677- R38	M677- H38	M677- S38
38 to 40	M677- R40	M677- H40	M677- S40
40 to 42	M677- R42	M677- H42	M677- S42
42 to 44	M677- R44	M677- H44	–
44 to 46	M677- R46	M677- H46	–
46 to 48	M677- R48	M677- H48	–
48 to 50	M677- R50	M677- H50	–
50 to 52	M677- R52	M677- H52	–
52 to 54	M677- R54	–	–
54 to 56	M677- R56	–	–
56 to 58	M677- R58	–	–
58 to 60	M677- R60*	–	–

*Hexagon and Square collets and those marked * can only be supplied with plain bore or annular serrations, the remainder being available with spiral serrations. Please write for details for heavy duty Auto-Multibore collets.

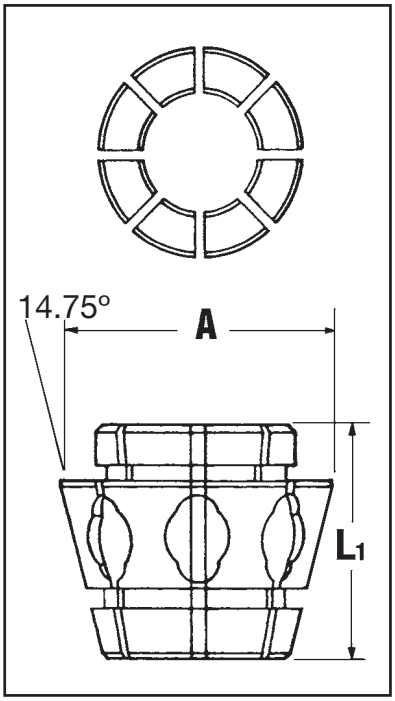

TECHLEADER® TOOLING INC.

DIN 6343
B42/48 COLLETS

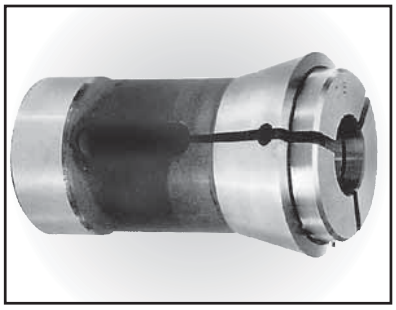

Round

ORDER NO.	D_1 SIZE (in)
4728-008	1/8
4728-012	3/16
4728-016	1/4
4728-020	5/16
4728-024	3/8
4728-028	7/16
4728-032	1/2
4728-036	9/16
4728-040	5/8
4728-044	11/16
4728-048	3/4
4728-052	13/16
4728-056	7/8
4728-060	15/16
4728-064	1
4728-068	1-1/16
4728-072	1-1/8
4728-076	1-3/16
4728-080	1-1/4
4728-084	1-5/16
4728-088	1-3/8
4728-092	1-7/16
4728-096	1-1/2
4728-100	1-9/16
4728-104	1-5/8

Hexagon

ORDER NO.	D_1 SIZE (in)
4728-008-H	1/8
4728-012-H	3/16
4728-016-H	1/4
4728-020-H	5/16
4728-024-H	3/8
4728-028-H	7/16
4728-032-H	1/2
4728-036-H	9/16
4728-040-H	5/8
4728-044-H	11/16
4728-048-H	3/4
4728-052-H	13/16
4728-056-H	7/8
4728-060-H	15/16
4728-064-H	1
4728-068-H	1-1/16
4728-072-H	1-1/8
4728-076-H	1-3/16
4728-080-H	1-1/4

Square

ORDER NO.	D_1 SIZE (in)
4728-008-S	1/8
4728-012-S	3/16
4728-016-S	1/4
4728-020-S	5/16
4728-024-S	3/8
4728-028-S	7/16
4728-032-S	1/2
4728-036-S	9/16
4728-040-S	5/8
4728-044-S	11/16
4728-048-S	3/4
4728-052-S	13/16
4728-056-S	7/8
4728-060-S	15/16
4728-064-S	1
4728-068-S	1-1/16

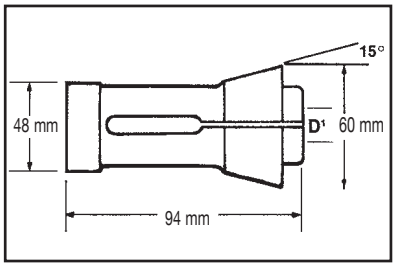

Emergency Collet

ORDER NO.	DESCRIPTION
4728-000-S	STEEL

METRIC SIZES AVAILABLE UPON REQUEST.

TECHLEADER® TOOLING INC.

DIN 6343
B60/66 COLLETS

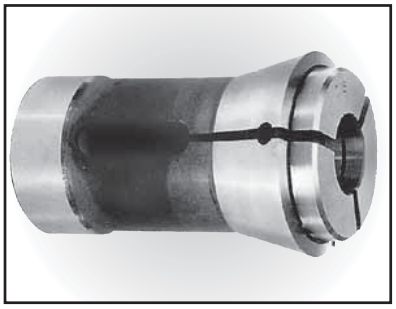

Round

ORDER NO.	D_1 SIZE (in)
4291-016	1/4
4291-020	5/16
4291-024	3/8
4291-028	7/16
4291-032	1/2
4291-036	9/16
4291-040	5/8
4291-044	11/16
4291-048	3/4
4291-052	13/16
4291-056	7/8
4291-060	15/16
4291-064	1
4291-068	1-1/16
4291-072	1-1/8
4291-076	1-3/16
4291-080	1-1/4
4291-084	1-5/16
4291-088	1-3/8
4291-092	1-7/16
4291-096	1-1/2
4291-100	1-9/16
4291-104	1-5/8
4291-108	1-11/16
4291-112	1-3/4
4291-116	1-13-16
4291-120	1-7/8
4291-124	1-15/16
4291-128	2
4291-136	2-1/8
4291-144	2-1/4
4291-152	2-3/8

Hexagon

ORDER NO.	D_1 SIZE (in)
4291-016-H	1/4
4291-020-H	5/16
4291-024-H	3/8
4291-028-H	7/16
4291-032-H	1/2
4291-036-H	9/16
4291-040-H	5/8
4291-044-H	11/16
4291-048-H	3/4
4291-052-H	13/16
4291-056-H	7/8
4291-060-H	15/16
4291-064-H	1
4291-068-H	1-1/16
4291-072-H	1-1/8
4291-076-H	1-3/16
4291-080-H	1-1/4
4291-084-H	1-5/16
4291-088-H	1-3/8
4291-092-H	1-7/16
4291-096-H	1-1/2
4291-100-H	1-9/16
4291-104-H	1-5/8
4291-108-H	1-11/16
4291-112-H	1-3/4
4291-116-H	1-13-16
4291-120-H	1-7/8
4291-124-H	1-15/16
4291-128-H	2

Square

ORDER NO.	D_1 SIZE (in)
4291-016-S	1/4
4291-020-S	5/16
4291-024-S	3/8
4291-028-S	7/16
4291-032-S	1/2
4291-036-S	9/16
4291-040-S	5/8
4291-044-S	11/16
4291-048-S	3/4
4291-052-S	13/16
4291-056-S	7/8
4291-060-S	15/16
4291-064-S	1
4291-068-S	1-1/16
4291-072-S	1-1/8
4291-076-S	1-3/16
4291-080-S	1-1/4
4291-084-S	1-5/16
4291-088-S	1-3/8
4291-092-S	1-7/16
4291-096-S	1-1/2

Emergency Collet

ORDER NO.	DESCRIPTION
4291-000-S	STEEL

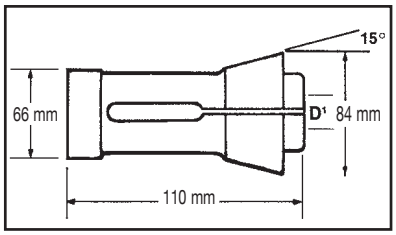

METRIC SIZES AVAILABLE UPON REQUEST.

SECTION 4

VDI Static & Driven Toolholders, Bushings, Boring Bar Sleeves, Live Centers for CNC Lathes

VDI Static & Driven Toolholders, Bushings, Boring Bar Sleeves, Live Centers for CNC Lathes

Techleader offers the full range of VDI quick-change precision toolholders for CNC lathes. With shanks from 20 to 80 mm, and manufactured to DIN 69880-1/VDI 3425-2 standards, we hold an extensive stock at competitive prices.

The main principle behind the VDI system is a quick-change, cam-operated clamping system for each toolholder within the tool disc. Tool changes can therefore be performed within seconds, rather than within minutes as with the traditional block system. The toolholders can also be preset away from the lathe on a presetter.

This quick-change design principle has been employed in Western Europe for many years, but is relatively new to North America.

Other features include:

- Heat-treated steel with approx. 700 N/mm^2 tensile strength
- Hardened and ground cylindrical shaft
- Ground tool seat faces and shoulder

In addition to these toolholders, Techleader has a full line of integral and modular driven tools for the most popular brands of CNC lathes being offered in North America today.

TECHLEADER® TOOLING INC.

VDI Toolholders

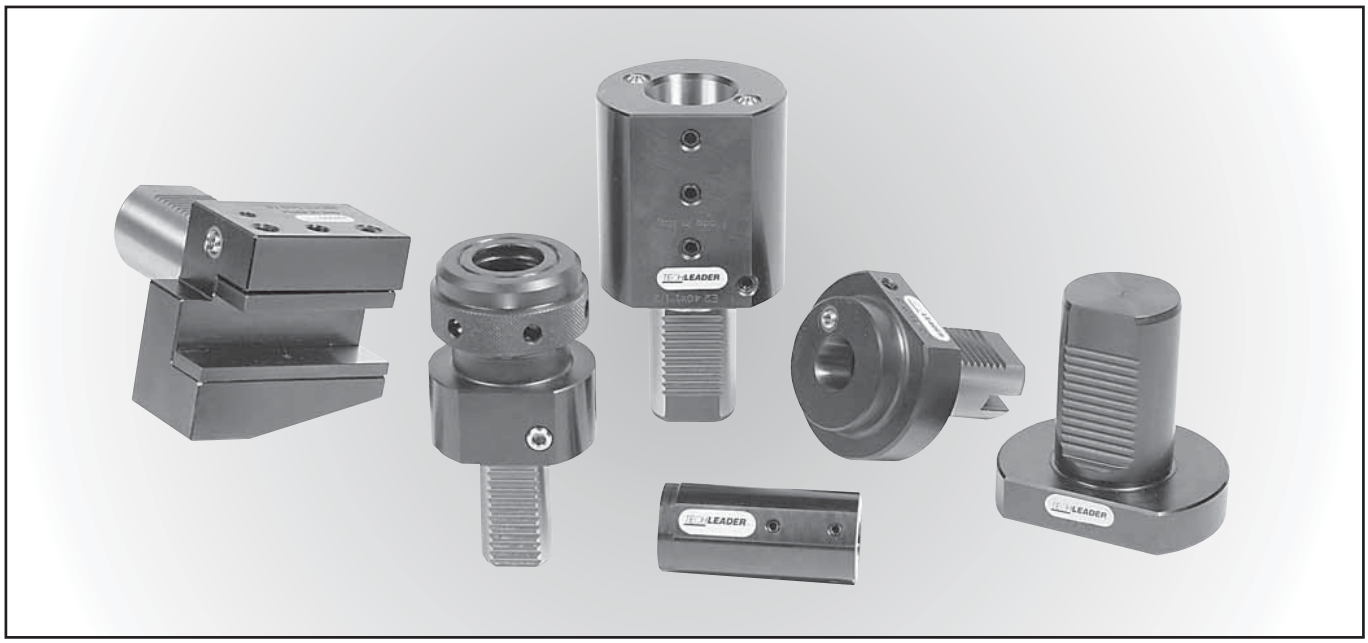

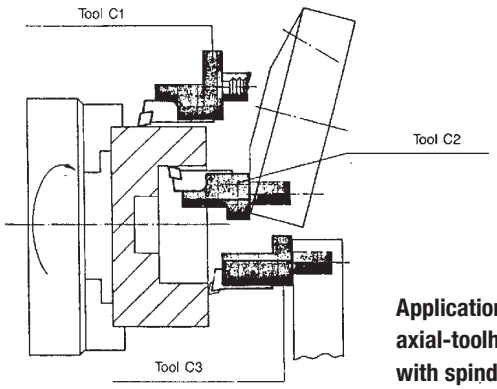

Application of axial-toolholders with spindle rotating clockwise.

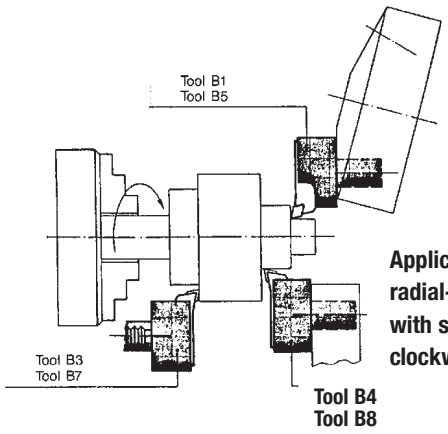

Application of radial-toolholders with spindle rotating clockwise.

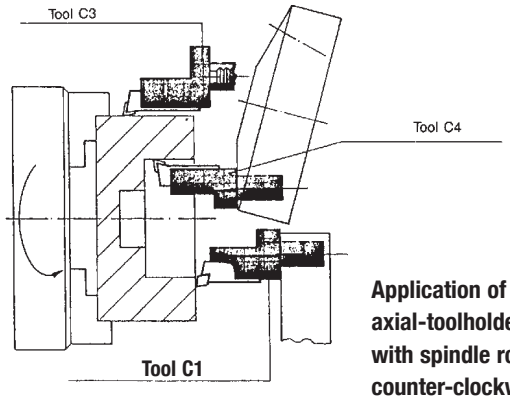

Application of axial-toolholders with spindle rotating counter-clockwise.

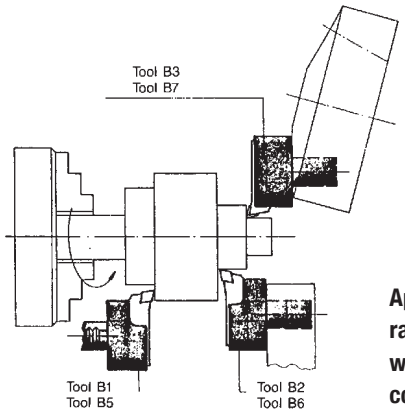

Application of radial-toolholders with spindle rotating counter-clockwise.

VDI Toolholders

Toolholder with parallel shank for special versions, rectangular

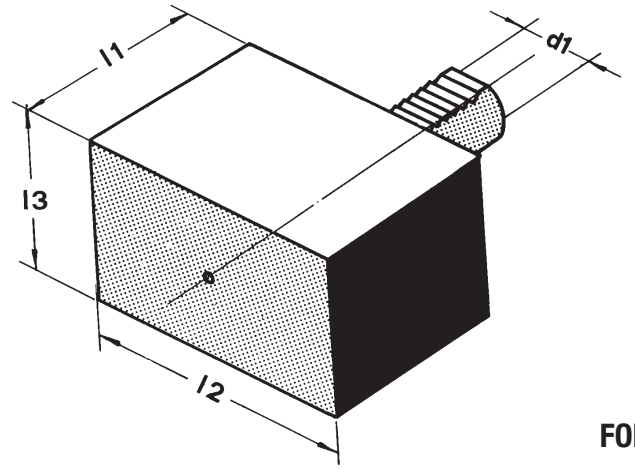

FORM A1

Order No.	Device Type	Dimensions			
		d_1	l_1	l_2	l_3
A12065	A1 20 x 65	20	65	100	60
A13085	A1 30 x 85	30	85	130	76
A140100	A1 40 x 100	40	100	151	96
A150125	A1 50 x 125	50	125	160	120
A160150	A1 60 x 150	60	150	165	125
A180200	A1 80 x 200	80	200	220	160

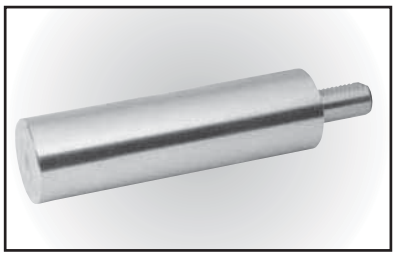

Toolholder with parallel shank for special versions, round

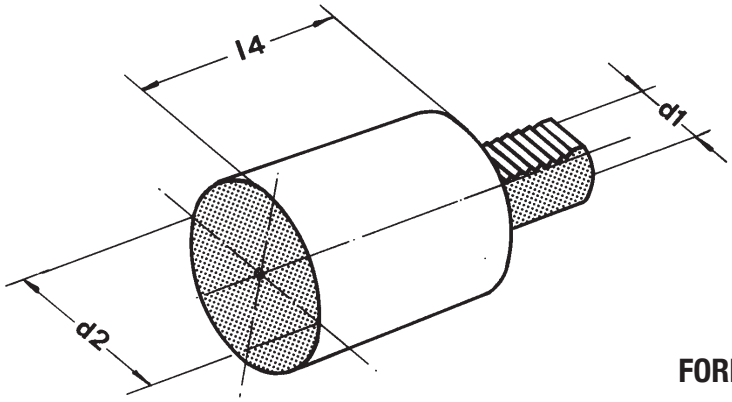

FORM A2

Order No.	Device Type	Dimensions		
		d_1	d_2	l_4
A22070	A2 20 x 70	20	50	70
A230100	A2 30 x 100	30	68	100
A230240	A2 30 x 240	30	68	240
A240120	A2 40 x 120	40	83	120
A240320	A2 40 x 320	40	83	320
A250135	A2 50 x 135	50	98	135
A250400	A2 50 x 400	50	98	400
A260150	A2 60 x 150	60	123	150
A260480	A2 60 x 480	60	123	480
A280500	A2 80 x 500	80	158	500

TECHLEADER® TOOLING INC.

VDI Toolholders

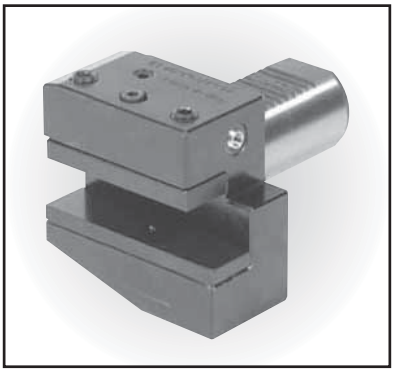

Toolholder with parallel shank and transversal rectangular seat, right-hand short

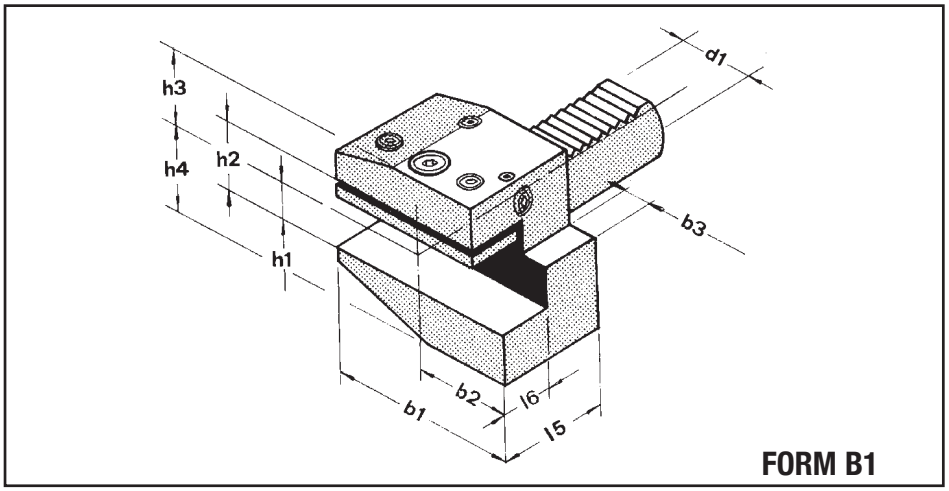

Order No.	Device Type	Dimensions									
		d_1	b_1	b_2	b_3	h_1	h_2	h_3	h_4	l_5	l_6
B12062530	B1 20 x 5/8 x 30	20	55	30	7	5/8	22	25	30	30	14
B12062540	B1 20 x 5/8 x 40	20	55	30	7	5/8	22	25	30	40	14
B13075040	B1 30 x 3/4 x 40	30	70	35	10	3/4	29	28	38	40	18
B13075060	B1 30 x 3/4 x 60	30	70	35	10	3/4	29	28	38	60	18
B140100044	B1 40 x 1 x 44	40	85	42.5	12.5	1	34	32.5	48	44	22
B150125055	B1 50 x 1-1/4 x 55	50	100	50	16	1-1/4	41	35	60	55	25
B160125060	B1 60 x 1-1/4 x 60	60	125	62.5	16	1-1/4	41	42.5	62.5	60	30
B180150075	B1 80 x 1-1/2 x 75	80	160	80	20	1-1/2	53	55	80	75	35

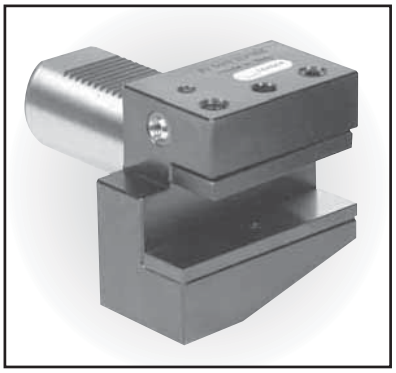

Toolholder with parallel shank and transversal rectangular seat, left-hand short

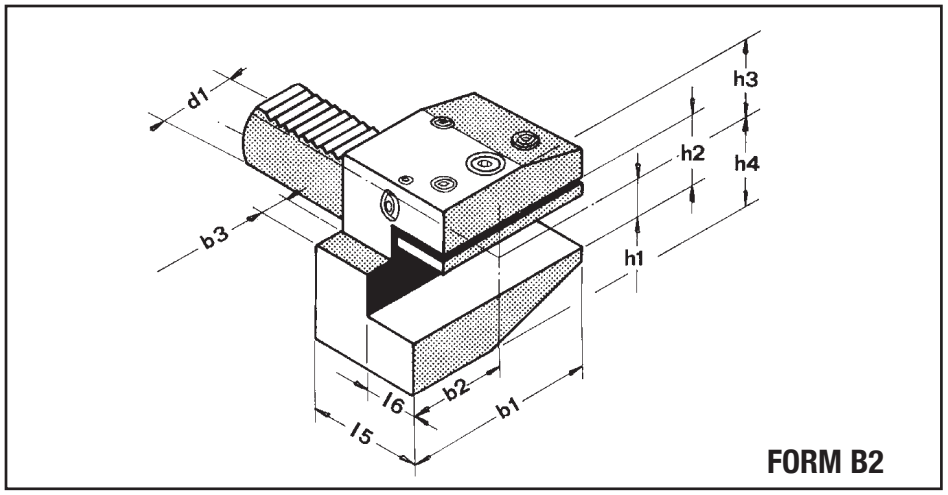

Order No.	Device Type	Dimensions									
		d_1	b_1	b_2	b_3	h_1	h_2	h_3	h_4	l_5	l_6
B22062530	B2 20 x 5/8 x 30	20	55	30	7	5/8	22	25	30	30	14
B22062540	B2 20 x 5/8 x 40	20	55	30	7	5/8	22	25	30	40	14
B23075040	B2 30 x 3/4 x 40	30	70	35	10	3/4	29	28	38	40	18
B23075060	B2 30 x 3/4 x 60	30	70	35	10	3/4	29	28	38	60	18
B240100044	B2 40 x 1 x 44	40	85	42.5	12.5	1	34	32.5	48	44	22
B250125055	B2 50 x 1-1/4 x 55	50	100	50	16	1-1/4	41	35	60	55	25
B260125060	B2 60 x 1-1/4 x 60	60	125	62.5	16	1-1/4	41	42.5	62.5	60	30
B280150075	B2 80 x 1-1/2 x 75	80	160	80	20	1-1/2	53	55	80	75	35

TECHLEADER® TOOLING INC.

VDI Toolholders

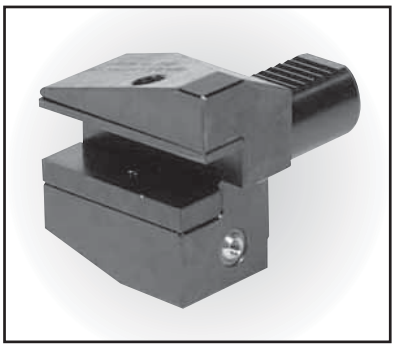

Toolholder with parallel shank and transversal rectangular seat, upside-down, right-hand short

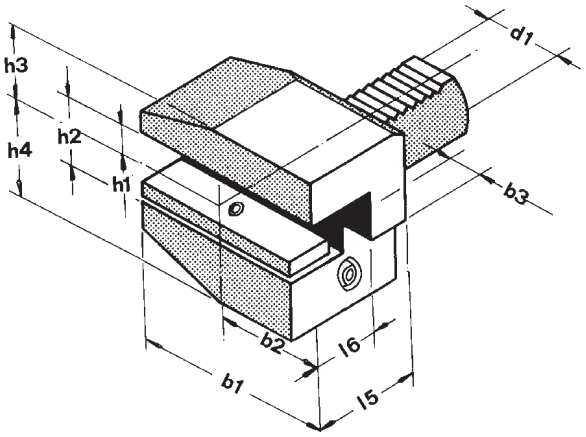

FORM B3

Order No.	Device Type	Dimensions									
		d_1	b_1	b_2	b_3	h_1	h_2	h_3	h_4	l_5	l_6
B32062530	B3 20 x 5/8 x 30	20	55	30	7	5/8	22	30	25	30	14
B32062540	B3 20 x 5/8 x 40	20	55	30	7	5/8	22	30	25	40	14
B33075040	B3 30 x 3/4 x 40	30	70	35	10	3/4	29	38	35	40	18
B33075060	B3 30 x 3/4 x 60	30	70	35	10	3/4	29	38	35	60	18
B340100044	B3 40 x 1 x 44	40	85	42.5	12.5	1	34	48	42.5	44	22
B350125055	B3 50 x 1-1/4 x 55	50	100	50	16	1-1/4	41	60	50	55	25
B360125060	B3 60 x 1-1/4 x 60	60	125	62.5	16	1-1/4	41	62.5	62.5	60	30
B380150075	B3 80 x 1-1/2 x 75	80	160	80	20	1-1/2	53	80	80	75	35

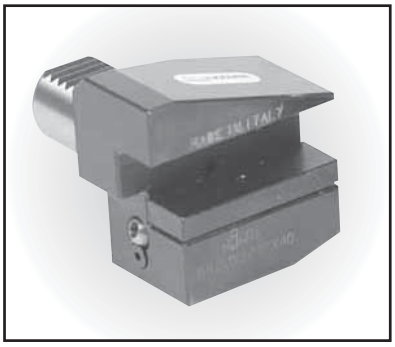

Toolholder with parallel shank and transversal rectangular seat, upside-down, left-hand short

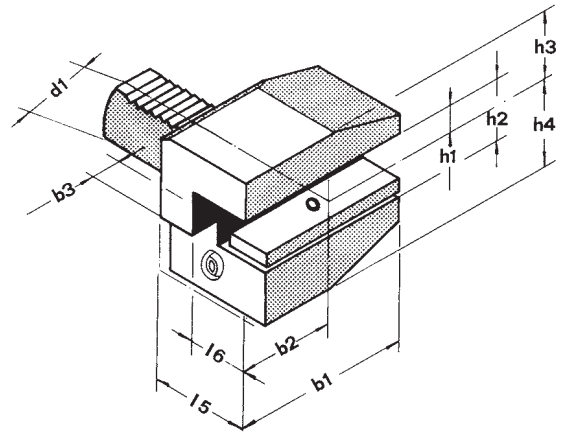

FORM B4

Order No.	Device Type	Dimensions									
		d_1	b_1	b_2	b_3	h_1	h_2	h_3	h_4	l_5	l_6
B42062530	B4 20 x 5/8 x 30	20	55	30	7	5/8	22	30	25	30	14
B42062540	B4 20 x 5/8 x 40	20	55	30	7	5/8	22	30	25	40	14
B43075040	B4 30 x 3/4 x 40	30	70	35	10	3/4	29	38	35	40	18
B43075060	B4 30 x 3/4 x 60	30	70	35	10	3/4	29	38	35	60	18
B440100044	B4 40 x 1 x 44	40	85	42.5	12.5	1	34	48	42.5	44	22
B450125055	B4 50 x 1-1/4 x 55	50	100	50	16	1-1/4	41	60	50	55	25
B460125060	B4 60 x 1-1/4 x 60	60	125	62.5	16	1-1/4	41	62.5	62.5	60	30
B480150075	B4 80 x 1-1/2 x 75	80	160	80	20	1-1/2	53	80	80	75	35

TECHLEADER® TOOLING INC.

VDI Toolholders

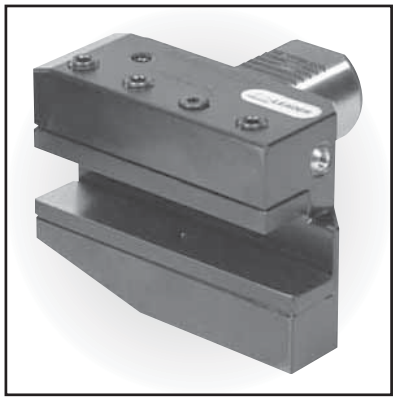

Toolholder with parallel shank and transversal seat, right-hand long

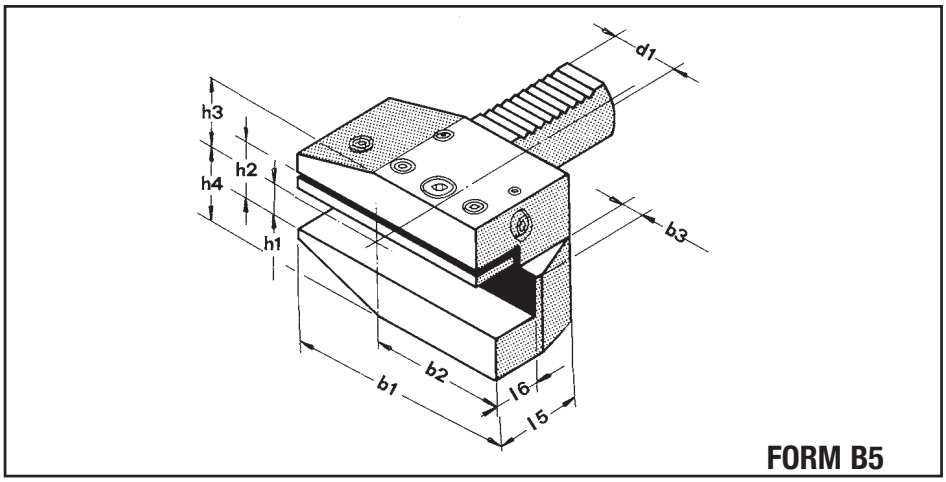

Order No.	Device Type	Dimensions									
		d_1	b_1	b_2	b_3	h_1	h_2	h_3	h_4	l_5	l_6
B52062530	B5 20 x 5/8 x 30	20	75	50	7	5/8	22	25	30	30	14
B52062540	B5 20 x 5/8 x 40	20	75	50	7	5/8	22	25	30	40	14
B53075040	B5 30 x 3/4 x 40	30	100	65	10	3/4	29	28	38	40	18
B53075060	B5 30 x 3/4 x 60	30	100	65	10	3/4	29	28	38	60	18
B540100044	B5 40 x 1 x 44	40	118	75.5	12.5	1	34	32.5	48	44	22
B550125055	B5 50 x 1-1/4 x 55	50	130	80	16	1-1/4	41	35	60	55	25
B560125060	B5 60 x 1-1/4 x 60	60	145	82.5	16	1-1/4	41	42.5	62.5	60	30
B580150075	B5 80 x 1-1/2 x 75	80	190	110	20	1-1/2	53	55	80	75	35

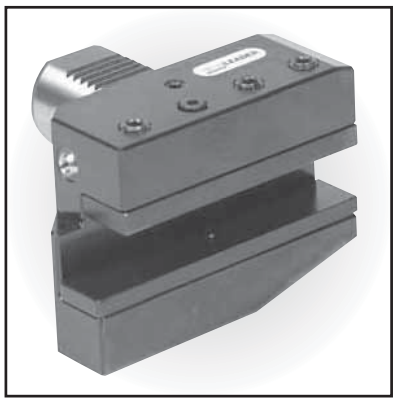

Toolholder with parallel shank and transversal rectangular seat, left-hand long

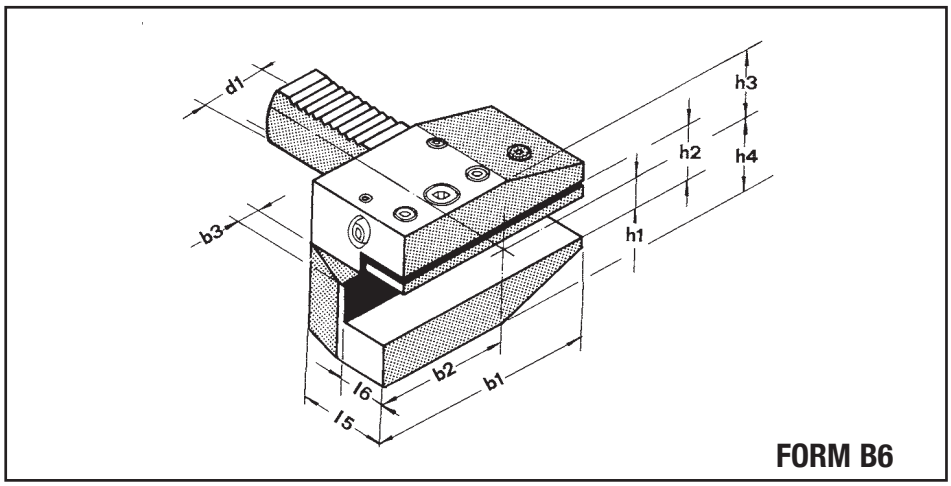

Order No.	Device Type	Dimensions									
		d_1	b_1	b_2	b_3	h_1	h_2	h_3	h_4	l_5	l_6
B62062530	B6 20 x 5/8 x 30	20	75	50	7	5/8	22	25	30	30	14
B62062540	B6 20 x 5/8 x 40	20	75	50	7	5/8	22	25	30	40	14
B63075040	B6 30 x 3/4 x 40	30	100	65	10	3/4	29	28	38	40	18
B63075060	B6 30 x 3/4 x 60	30	100	65	10	3/4	29	28	38	60	18
B640100044	B6 40 x 1 x 44	40	118	75.5	12.5	1	34	32.5	48	44	22
B650125055	B6 50 x 1-1/4 x 55	50	130	80	16	1-1/4	41	35	60	55	25
B660125060	B6 60 x 1-1/4 x 60	60	145	82.5	16	1-1/4	41	42.5	62.5	60	30
B680150075	B6 80 x 1-1/2 x 75	80	190	110	20	1-1/2	53	55	80	75	35

TECHLEADER® TOOLING INC.

VDI Toolholders

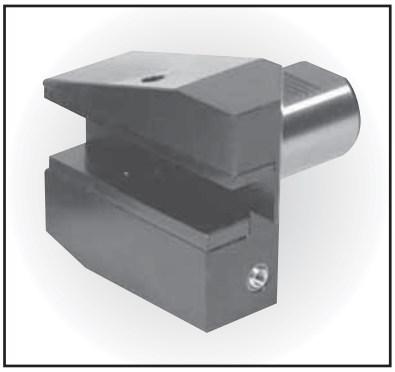

Toolholder with parallel shank and transversal rectangular seat, upside-down, right-hand long.

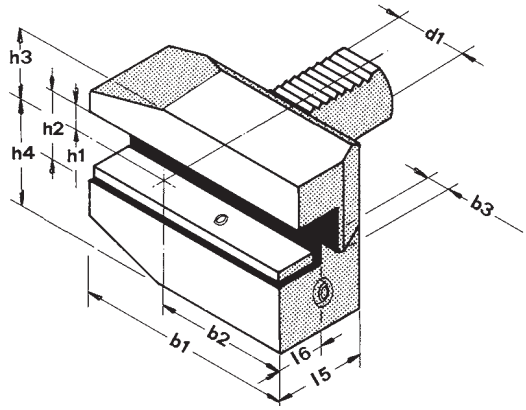

FORM B7

Order No.	Device Type	Dimensions									
		d_1	b_1	b_2	b_3	h_1	h_2	h_3	h_4	l_5	l_6
B72062530	B7 20 x 5/8 x 30	20	75	50	7	5/8	22	30	25	30	14
B72062540	B7 20 x 5/8 x 40	20	75	50	7	5/8	22	30	25	40	14
B73075040	B7 30 x 3/4 x 40	30	100	65	10	3/4	29	38	35	40	18
B73075060	B7 30 x 3/4 x 60	30	100	65	10	3/4	29	38	35	60	18
B740100044	B7 40 x 1 x 44	40	118	75.5	12.5	1	34	48	42.5	44	22
B750125055	B7 50 x 1-1/4 x 55	50	130	80	16	1-1/4	41	60	50	55	25
B760125060	B7 60 x 1-1/4 x 60	60	145	82.5	16	1-1/4	41	62.5	62.5	60	30
B780150075	B7 80 x 1-1/2 x 75	80	190	110	20	1-1/2	53	80	80	75	35

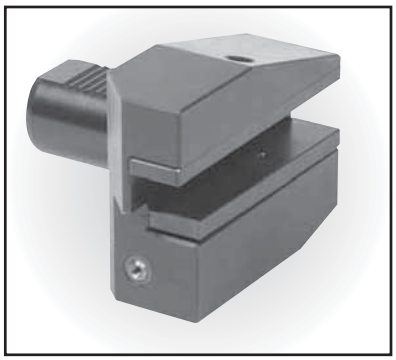

Toolholder with parallel shank and transversal rectangular seat, upside-down, left-hand long.

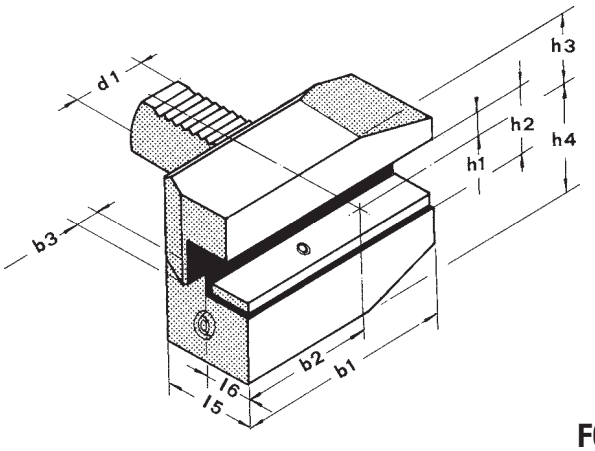

FORM B8

Order No.	Device Type	Dimensions									
		d_1	b_1	b_2	b_3	h_1	h_2	h_3	h_4	l_5	l_6
B82062530	B8 20 x 5/8 x 30	20	75	50	7	5/8	22	30	25	30	14
B82062540	B8 20 x 5/8 x 40	20	75	50	7	5/8	22	30	25	40	14
B83075040	B8 30 x 3/4 x 40	30	100	65	10	3/4	29	38	35	40	18
B83075060	B8 30 x 3/4 x 60	30	100	65	10	3/4	29	38	35	60	18
B840100044	B8 40 x 1 x 44	40	118	75.5	12.5	1	34	48	42.5	44	22
B850125055	B8 50 x 1-1/4 x 55	50	130	80	16	1-1/4	41	60	50	55	25
B860125060	B8 60 x 1-1/4 x 60	60	145	82.5	16	1-1/4	41	62.5	62.5	60	30
B880150075	B8 80 x 1-1/2 x 75	80	190	110	20	1-1/2	53	80	80	75	35

TECHLEADER® TOOLING INC.

VDI Toolholders

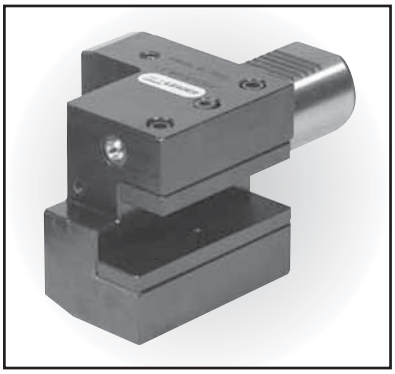

Toolholder with parallel shank and longitudinal rectangular seat, right-hand

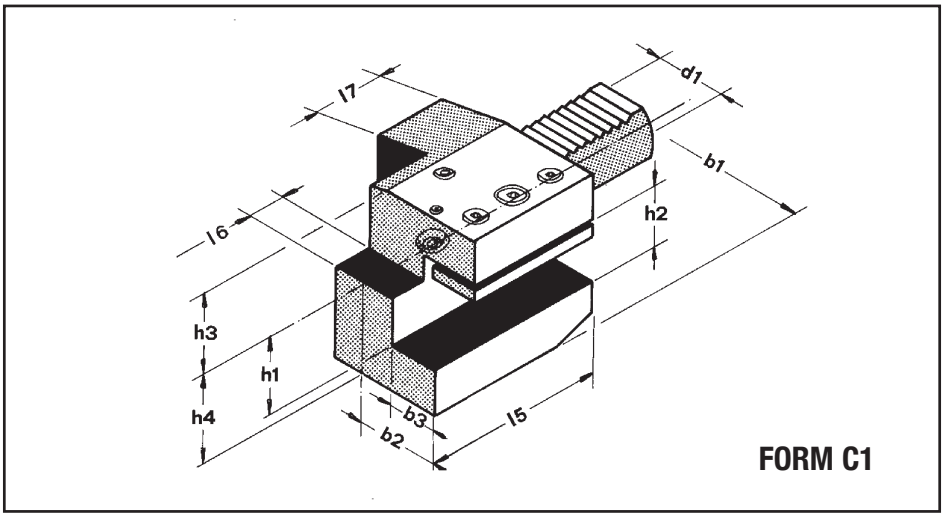

Order No.	Device Type	Dimensions										
		d_1	b_1	b_2	b_3	h_1	h_2	h_3	h_4	l_5	l_6	l_7
C120625	C1 20 x 5/8	20	52	27	14	5/8	22	25	30	55	7	30
C120625W	C1 20 x 5/8 W	20	65	40	14	5/8	22	25	30	50	–	30
C130750	C1 30 x 3/4	30	70	35	18	3/4	29	28	38	70	10	30
C1401000	C1 40 x 1	40	85	42.5	22	1	34	32.5	48	85	12.5	30
C1501250	C1 50 x 1-1/4	50	100	50	24.5	1-1/4	41	35	60	100	16	40
C1601250	C1 60 x 1-1/4	60	125	62.5	30	1-1/4	41	42.5	62.5	125	16	40
C1801500	C1 80 x 1-1/2	80	160	80	39	1-1/2	53	55	80	160	20	40

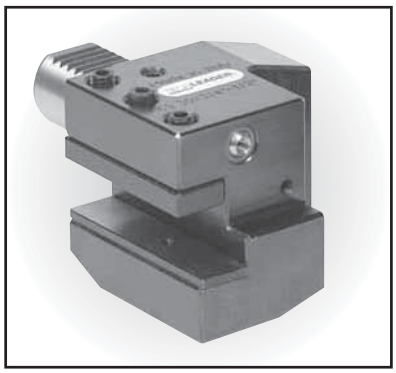

Toolholder with parallel shank and longitudinal rectangular seat, left-hand

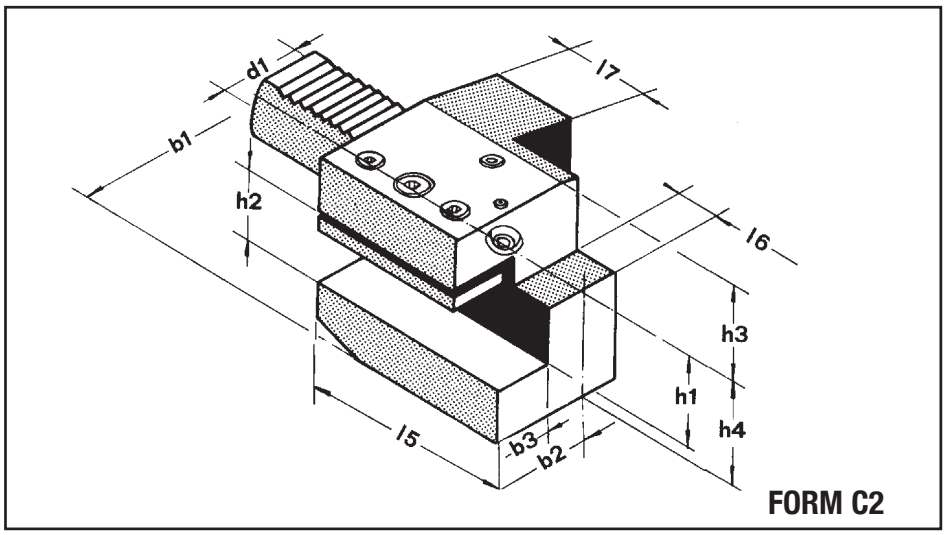

Order No.	Device Type	Dimensions										
		d_1	b_1	b_2	b_3	h_1	h_2	h_3	h_4	l_5	l_6	l_7
C220625	C2 20 x 5/8	20	65	40	14	5/8	22	25	30	50	–	30
C230750	C2 30 x 3/4	30	76	41	18	3/4	29	28	38	70	10	30
C2401000	C2 40 x 1	40	90	47.5	22	1	34	32.5	48	85	12.5	30
C2501250	C2 50 x 1-1/4	50	105	55	24.5	1-1/4	41	35	60	100	16	40
C2601250	C2 60 x 1-1/4	60	125	62.5	30	1-1/4	41	42.5	62.5	125	16	40
C2801500	C2 80 x 1-1/2	80	160	78	37	1-1/2	53	55	80	160	20	40

TECHLEADER® TOOLING INC.

VDI Toolholders

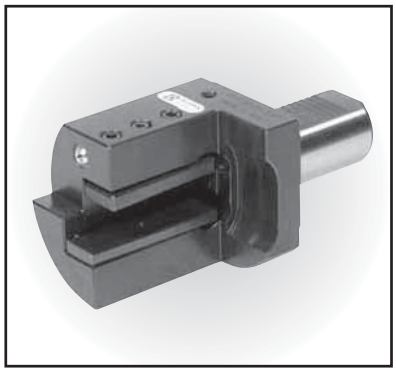

Toolholder with parallel shank and longitudinal rectangular seat, right-hand special

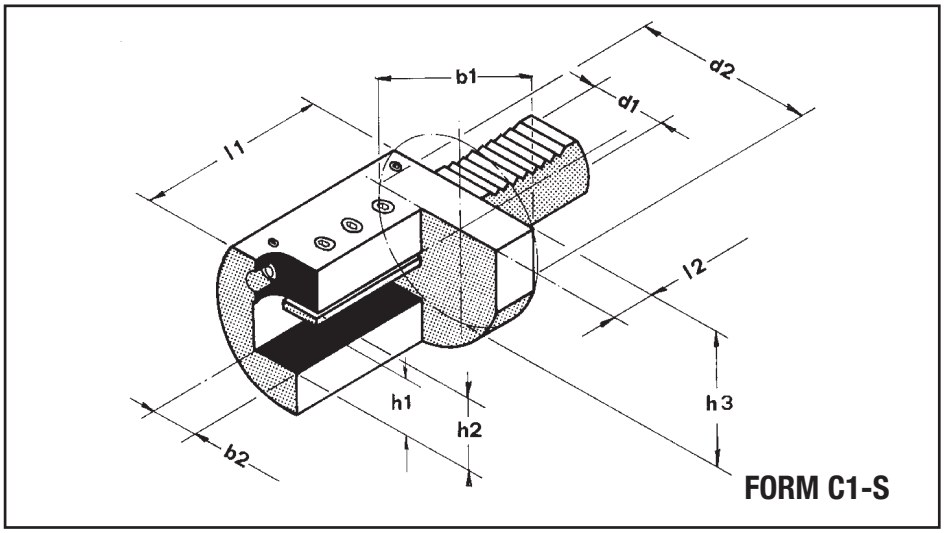

Order No.	Device Type	Dimensions								
		d_1	d_2	b_1	b_2	h_1	h_2	h_3	l_1	l_2
C1S30750	C1-S 30 x 3/4	30	83	69.5	18	3/4	29	69.5	70	18
C1S401000	C1-S 40 x 1	40	98	84	22	1	34	84	100	22
C1S501250	C1-S 50 x 1-1/4	50	123	104	25	1-1/4	41	104	120	22
C1S601250	C1-S 60 x 1-1/4	60	123	104	32	1-1/4	41	104	135	25
C1S801500	C1-S 80 x 1-1/2	80	158	134	40	1-1/2	49	134	140	30

All rights of modification reserved.

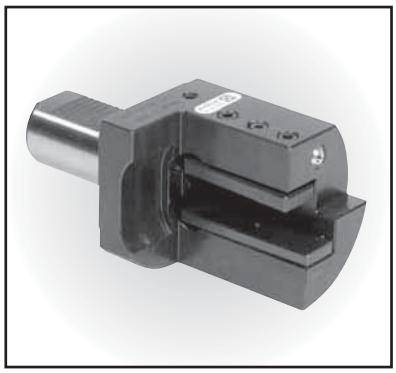

Toolholder with parallel shank and longitudinal rectangular seat, left-hand special

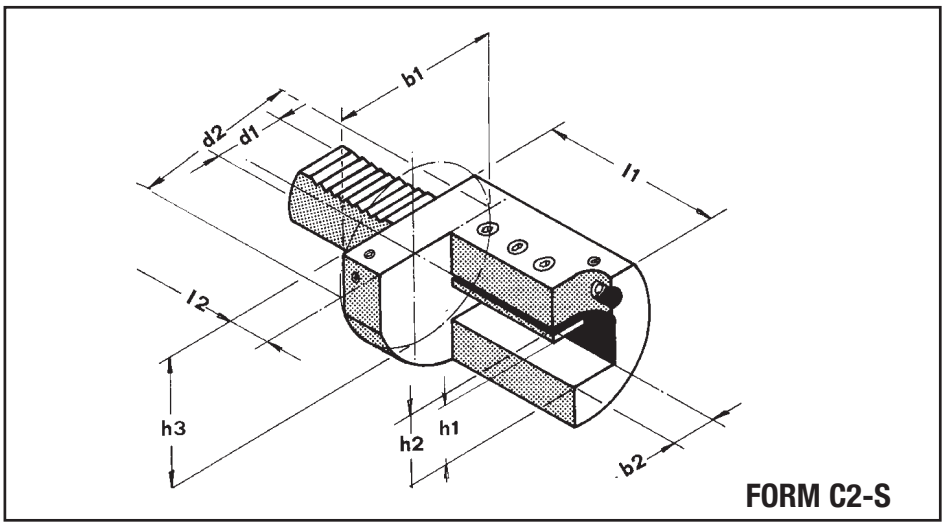

Order No.	Device Type	Dimensions								
		d_1	d_2	b_1	b_2	h_1	h_2	h_3	l_1	l_2
C2S30750	C2-S 30 x 3/4	30	83	69.5	18	3/4	29	69.5	70	18
C2S401000	C2-S 40 x 1	40	98	84	22	1	34	84	100	22
C2S501250	C2-S 50 x 1-1/4	50	123	104	25	1-1/4	41	104	120	22
C2S601250	C2-S 60 x 1-1/4	60	123	104	32	1-1/4	41	104	135	25
C2S801500	C2-S 80 x 1-1/2	80	158	134	40	1-1/2	49	134	140	30

All rights of modification reserved.

TECHLEADER® TOOLING INC.

VDI Toolholders

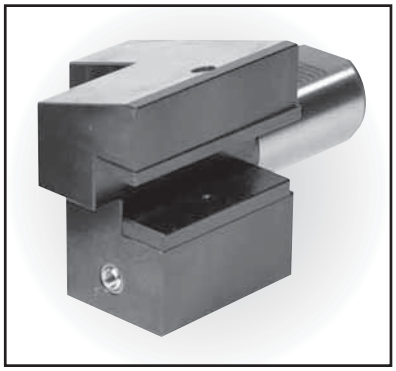

Toolholder with parallel shank and longitudinal rectangular seat, upside-down, right-hand

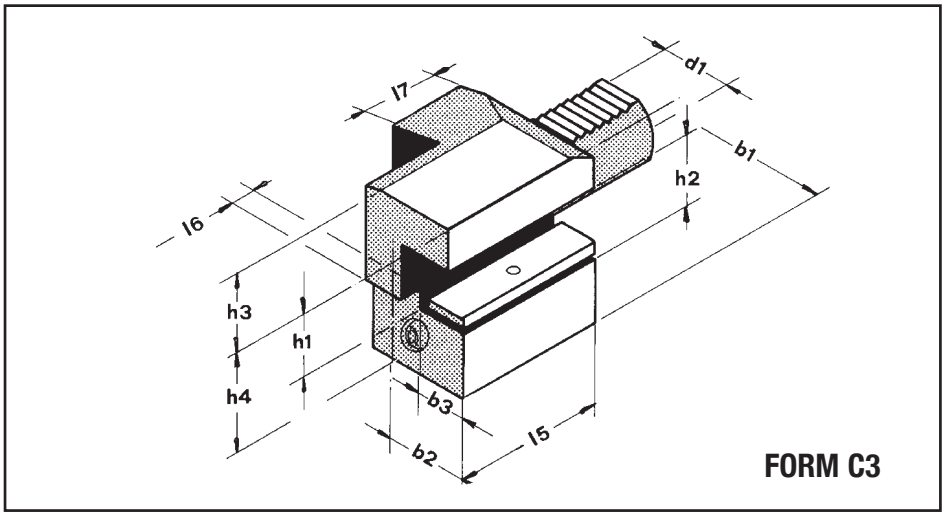

Order No.	Device Type	Dimensions										
		d_1	b_1	b_2	b_3	h_1	h_2	h_3	h_4	l_5	l_6	l_7
C320625	C3 20 x 5/8	20	52	27	14	5/8	22	30	25	55	7	30
C320605W	C3 20 x 5/8 W	20	65	40	14	5/8	22	30	25	50	–	30
C330750	C3 30 x 3/4	30	70	35	18	3/4	29	38	35	70	10	30
C3401000	C3 40 x 1	40	85	42.5	22	1	34	48	42.5	85	12.5	30
C3501250	C3 50 x 1-1/4	50	100	50	24.5	1-1/4	41	60	50	100	16	40
C3601250	C3 60 x 1-1/4	60	125	62.5	30	1-1/4	41	62.5	62.5	125	16	40
C3801500	C3 80 x 1-1/2	80	160	80	39	1-1/2	53	80	80	160	20	40

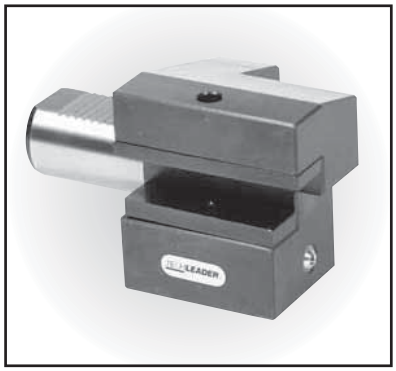

Toolholder with parallel shank and longitudinal rectangular seat, upside-down, left-hand

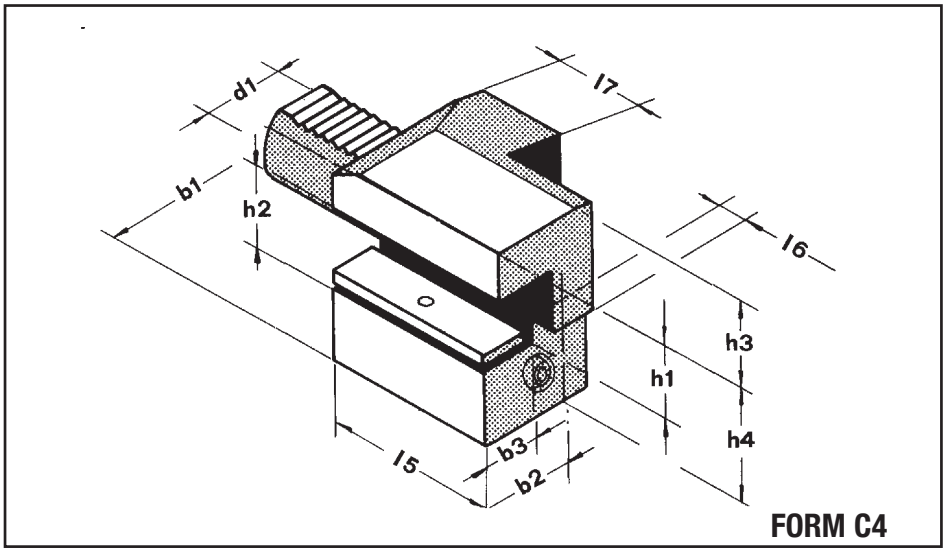

Order No.	Device Type	Dimensions										
		d_1	b_1	b_2	b_3	h_1	h_2	h_3	h_4	l_5	l_6	l_7
C420625	C4 20 x 5/8	20	65	40	14	5/8	22	30	25	50	–	30
C430750	C4 30 x 3/4	30	76	41	18	3/4	29	38	35	70	10	30
C4401000	C4 40 x 1	40	90	47.5	22	1	34	48	42.5	85	12.5	30
C4501250	C4 50 x 1-1/4	50	105	55	24.5	1-1/4	41	60	50	100	16	40
C4601250	C4 60 x 1-1/4	60	125	62.5	30	1-1/4	41	62.5	62.5	125	16	40
C4801500	C4 80 x 1-1/2	80	160	78	37	1-1/2	53	80	80	160	20	40

TECHLEADER® TOOLING INC.

VDI Toolholders

Toolholder with parallel shank and multiple rectangular seats

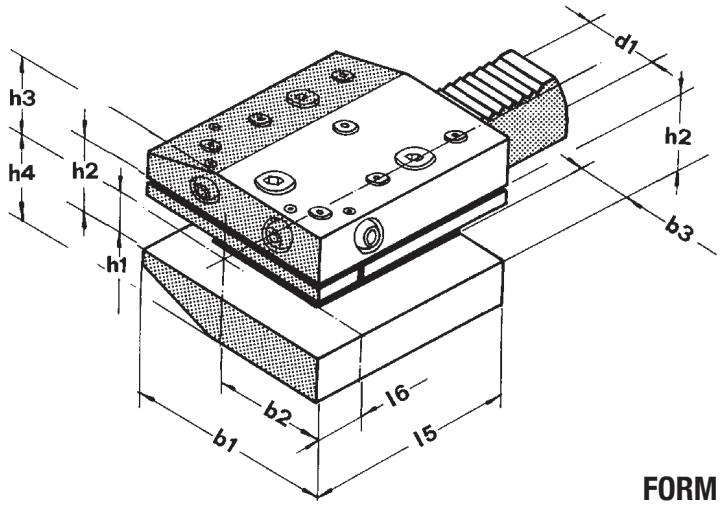

FORM D1

Order No.	Device Type	Dimensions									
		d_1	b_1	b_2	b_3	h_1	h_2	h_3	h_4	l_5	l_6
D130750	D1 30 x 3/4	30	70	35	14.5	3/4	29	28	38	60	25
D1401000	D1 40 x 1	40	85	42.5	19.5	1	34	32.5	48	72.5	30
D1501250	D1 50 x 1-1/4	50	100	50	24.5	1-1/4	45	35	60	84	34
D1601250	D1 60 x 1-1/4	60	125	62.5	30	1-1/4	34	42.5	62.5	109	46.5
D1801500	D1 80 x 1-1/2	80	160	80	39	1-1/2	45	55	80	140	60

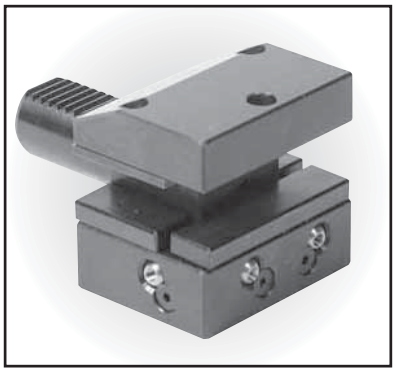

Toolholder with parallel shank and multiple rectangular seats, upside-down

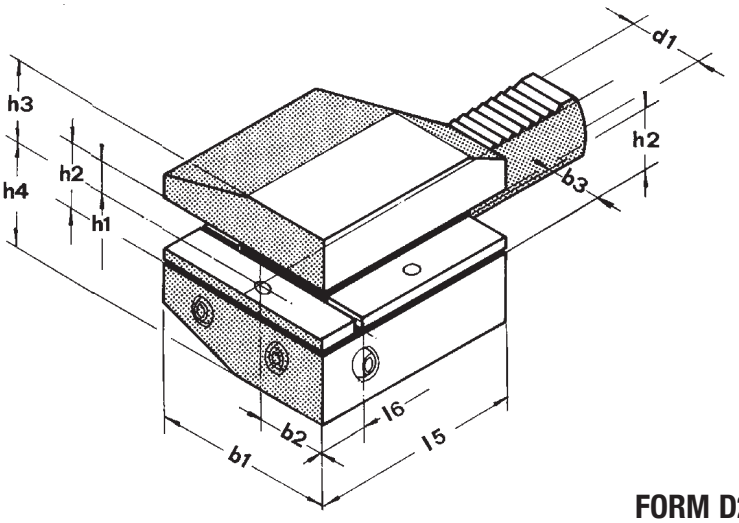

FORM D2

Order No.	Device Type	Dimensions									
		d_1	b_1	b_2	b_3	h_1	h_2	h_3	h_4	l_5	l_6
D230750	D2 30 x 3/4	30	70	35	14.5	3/4	29	38	35	60	25
D2401000	D2 40 x 1	40	85	42.5	19.5	1	34	48	42.5	72.5	30
D2501250	D2 50 x 1-1/4	50	100	50	24.5	1-1/4	45	60	50	84	34
D2601250	D2 60 x 1-1/4	60	125	62.5	30	1-1/4	34	62.5	62.5	109	46.5
D2801500	D2 80 x 1-1/2	80	160	80	39	1-1/2	45	80	80	140	60

TECHLEADER® TOOLING INC.

VDI Toolholders

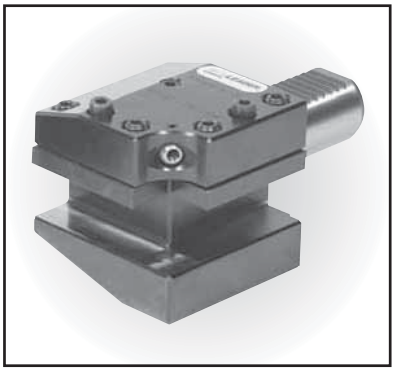

Toolholder with parallel shank and multiple rectangular seats, right-hand special

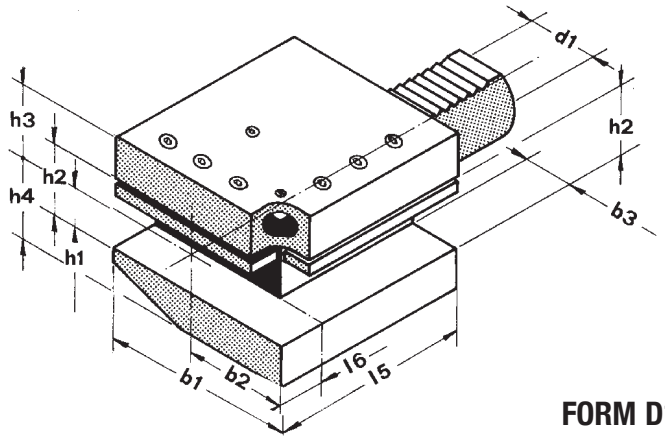

FORM D1-S1

Order No.	Device Type	Dimensions									
		d_1	b_1	b_2	b_3	h_1	h_2	h_3	h_4	l_5	l_6
D1S120625	D1-S1 20 x 5/8	20	55	30	14	5/8	22	25	30	55	14
D1S130750	D1-S1 30 x 3/4	30	70	35	18	3/4	29	28	38	70	18
D1S1401000	D1-S1 40 x 1	40	85	42.5	22	1	34	32.5	48	85	22
D1S1501250	D1-S1 50 x 1-1/4	50	100	50	25	1-1/4	41	35	60	120	25
D1S1601250	D1-S1 60 x 1-1/4	60	125	62.5	30	1-1/4	41	42.5	62.5	135	30
D1S1801500	D1-S1 80 x 1-1/2	80	160	80	39	1-1/2	53	55	80	160	35

All rights of modification reserved

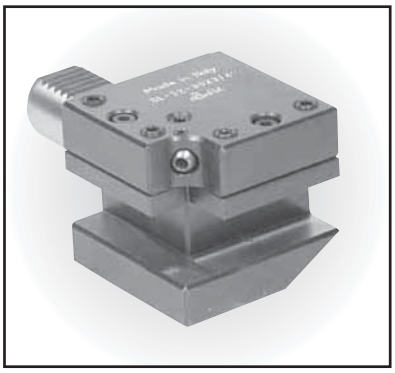

Toolholder with parallel shank and multiple rectangular seats, left-hand special

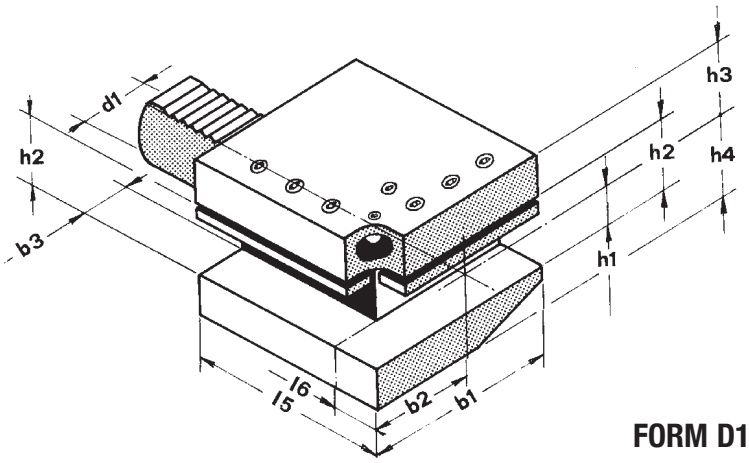

FORM D1-S2

Order No.	Device Type	Dimensions									
		d_1	b_1	b_2	b_3	h_1	h_2	h_3	h_4	l_5	l_6
D1S220625	D1-S2 20 x 5/8	20	55	30	14	5/8	22	25	30	55	14
D1S230750	D1-S2 30 x 3/4	30	76	41	18	3/4	29	28	38	70	18
D1S2401000	D1-S2 40 x 1	40	90	47.5	22	1	34	32.5	48	85	22
D1S2501250	D1-S2 50 x 1-1/4	50	105	55	25	1-1/4	41	35	60	120	25
D1S2601250	D1-S2 60 x 1-1/4	60	125	62.5	30	1-1/4	41	42.5	62.5	135	30
D1S2801500	D1-S2 80 x 1-1/2	80	160	80	37	1-1/2	53	55	80	160	35

TECHLEADER® TOOLING INC.

VDI Toolholders

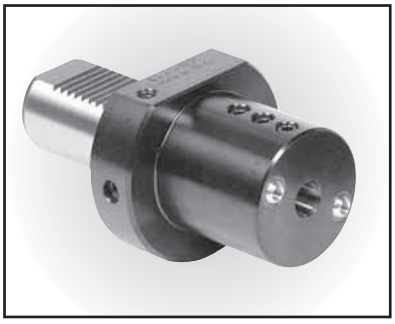

Toolholder with parallel shank for boring tools

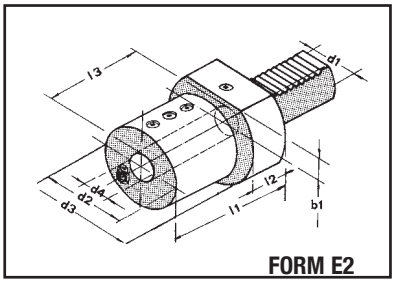

FORM E2

Coolant Flow External and Internal on these Holders

See pages 4-16 for reducing bushings

Order No.	Device Type	Dimensions							
		d_1	d_2	d_3	d_4	b_1	l_1	l_2	l_3
E220250	E2 20 x 1/4	20	40	50	1/4	–	50	18	41
E220375	E2 20 x 3/8	20	40	50	3/8	–	50	18	41
E220500	E2 20 x 1/2	20	40	50	1/2	–	50	18	41
E220625	E2 20 x 5/8	20	40	50	5/8	–	50	18	41
E220750	E2 20 x 3/4	20	50	50	3/4	–	50	18	41
E2201000	E2 20 x 1	20	50	50	1	–	60	18	51
E230250	E2 30 x 1/4	30	55	68	1/4	28	60	22	51
E230375	E2 30 x 3/8	30	55	68	3/8	28	60	22	51
E230500	E2 30 x 1/2	30	55	68	1/2	28	60	22	51
E230625	E2 30 x 5/8	30	55	68	5/8	28	60	22	51
E230750	E2 30 x 3/4	30	55	68	3/4	28	60	22	51
E2301000	E2 30 x 1	30	55	68	1	28	60	22	51
E2301250	E2 30 x 1-1/4	30	68	68	1-1/4	28	75	22	61
E2301500	E2 30 x 1-1/2	30	68	68	1-1/2	28	75	22	76
E240375	E2 40 x 3/8	40	55	83	3/8	32.5	75	22	61
E240500	E2 40 x 1/2	40	55	83	1/2	32.5	75	22	61
E240625	E2 40 x 5/8	40	55	83	5/8	32.5	75	22	61
E240750	E2 40 x 3/4	40	55	83	3/4	32.5	75	22	61
E2401000	E2 40 x 1	40	55	83	1	32.5	75	22	61
E2401250	E2 40 x 1-1/4	40	83	83	1-1/4	32.5	75	22	61
E2401500	E2 40 x 1-1/2	40	83	83	1-1/2	32.5	90	22	76
E2401750	E2 40 x 1-3/4	40	83	83	1-3/4	32.5	90	–	76
E2402000	E2 40 x 2	40	83	83	2	–	90	22	75
E250500	E2 50 x 1/2	50	68	98	1/2	35	90	30	76
E250625	E2 50 x 5/8	50	68	98	5/8	35	90	30	76
E250750	E2 50 x 3/4	50	68	98	3/4	35	90	30	76
E2501000	E2 50 x 1	50	68	98	1	35	90	30	76
E2501250	E2 50 x 1-1/4	50	68	98	1-1/4	35	90	30	76
E2501500	E2 50 x 1-1/2	50	98	98	1-1/2	35	90	30	76
E2501750	E2 50 x 1-3/4	50	98	98	1-3/4	35	90	30	76
E2502000	E2 50 x 2	50	98	98	2	35	100	30	86
E2502500	E2 50 x 2-1/2	50	98	98	2-1/2	45	100	–	86
E260625	E2 60 x 5/8	60	68	123	5/8	42.5	90	30	76
E260750	E2 60 x 3/4	60	68	123	3/4	42.5	90	30	76
E2601000	E2 60 x 1	60	68	123	1	42.5	90	30	76
E2601250	E2 60 x 1-1/4	60	68	123	1-1/4	42.5	90	30	76
E2601500	E2 60 x 1-1/2	60	98	123	1-1/2	42.5	90	30	76
E2601750	E2 60 x 1-3/4	60	98	123	1-3/4	42.5	90	30	76
E2602000	E2 60 x 2	60	98	123	2	42.5	100	30	86
E2602500	E2 60 x 2-1/2	60	110	123	2-1/2	42.5	100	30	86
E280750	E2 80 x 3/4	80	68	158	3/4	55	100	40	86
E2801000	E2 80 x 1	80	68	158	1	55	100	40	86
E2801250	E2 80 x 1-1/4	80	68	158	1-1/4	55	100	40	86
E2801500	E2 80 x 1-1/2	80	98	158	1-1/2	55	100	40	86
E2801750	E2 80 x 1-3/4	80	98	158	1-3/4	55	100	40	86
E2802000	E2 80 x 2	80	98	158	2	55	100	40	86

TECHLEADER® TOOLING INC.

VDI Toolholders

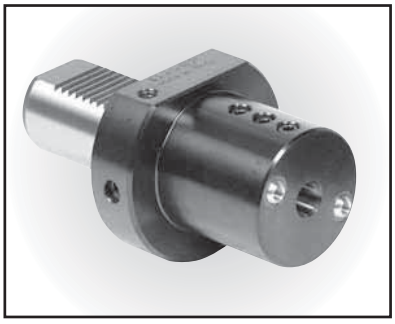

Toolholder with parallel shank for boring tools

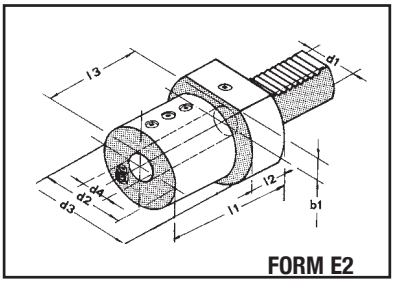

Coolant Flow External and Internal on these Holders

Order No.	Device Type	Dimensions						
		d_1	d_2	d_3	d_4	l_1	l_2	l_3
E23016	E2 30 x 16	30	55	68	16	60	22	51
E23020	E2 30 x 20	30	55	68	20	60	22	51
E23025	E2 30 x 25	30	55	68	25	60	22	51
E24032	E2 30 x 32	30	68	68	32	75	22	61
E24016	E2 40 x 16	40	55	83	16	75	22	61
E24020	E2 40 x 20	40	55	83	20	75	22	61
E24025	E2 40 x 25	40	55	83	25	75	22	61
E24032	E2 40 x 32	40	83	83	32	75	22	61
E24040	E2 40 x 40	40	83	83	40	90	22	76
E24050	E2 40 x 50	40	83	83	50	90	22	75
E25016	E2 50 x 16	50	68	98	16	90	30	76
E25020	E2 50 x 20	50	68	98	20	90	30	76
E25025	E2 50 x 25	50	68	98	25	90	30	76
E25032	E2 50 x 32	50	68	98	32	90	30	76
E25040	E2 50 x 40	50	98	98	40	90	30	76
E25050	E2 50 x 50	50	98	98	50	100	30	86
E26016	E2 60 x 16	60	68	123	16	90	30	76
E26020	E2 60 x 20	60	68	123	20	90	30	76
E26025	E2 60 x 25	60	68	123	25	90	30	76
E26032	E2 60 x 32	60	68	123	32	90	30	76
E26040	E2 60 x 40	60	98	123	40	90	30	76
E26050	E2 60 x 50	60	98	123	50	90	30	86

VDI Toolholders

ECX and TG style collet chucks with parallel shank

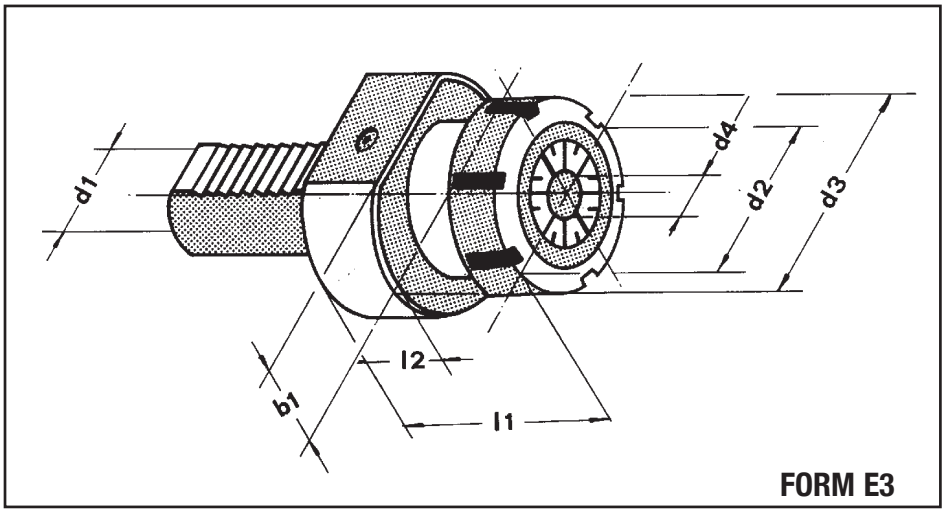

Our ECX Collet Chucks accepts the following competitors styles of collets: DR, ER, ECX & RD .

See pages 3-7 to 3-15 for ECX/ER collets

ECX STYLE

Order No.	Device Type	Dimensions						
		d_1	d_2	d_3	d_4	b_1	l_1	l_2
E320ECX25	E3-20-ECX 25	20	42	50	1-16 mm	–	60	18
E330ECX25	E3-30-ECX 25	30	50	68	1-16 mm	28	65	22
E330ECX32	E3-30-ECX 32	30	50	68	2-20 mm	28	65	22
E330ECX40	E3-30-ECX 40	30	63	68	4-26 mm	28	75	22
E340ECX25	E3-40-ECX 25	40	42	83	1-16 mm	32.5	65	22
E340ECX32	E3-40-ECX 32	40	50	83	2-20 mm	32.5	65	22
E340ECX40	E3-40-ECX 40	40	63	83	4-26 mm	32.5	75	22
E350ECX40	E3-50-ECX 40	50	63	98	4-26 mm	35	75	30

See pages 3-2 to 3-3 for TG collets

TG STYLE

Order No.	Device Type	Dimensions						
		d_1	d_2	d_3	d_4	b_1	l_1	l_2
E330TG100	E3-30-TG100	30	63.5	68	3/32"-1"	28	65	22
E340TG100	E3-40-TG100	40	63.5	83	3/32"-1"	32.5	65	22
E350TG100	E3-50-TG100	50	63.5	98	3/32"-1"	35	65	30
E360TG100	E3-60-TG100	60	63.5	123	3/32"-1"	42.5	85	30
E360TG150	E3-60-TG150	60	82.5	123	1/2"-1-1/2"	42.5	85	30

TECHLEADER® TOOLING INC.

VDI Toolholders

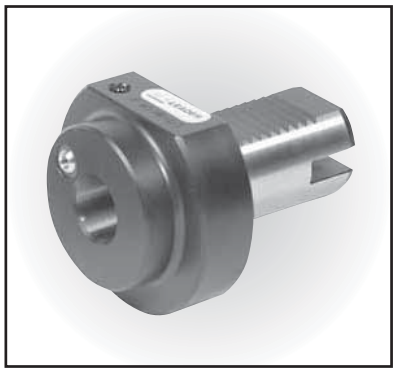

Toolholder with parallel shank and morse taper holder

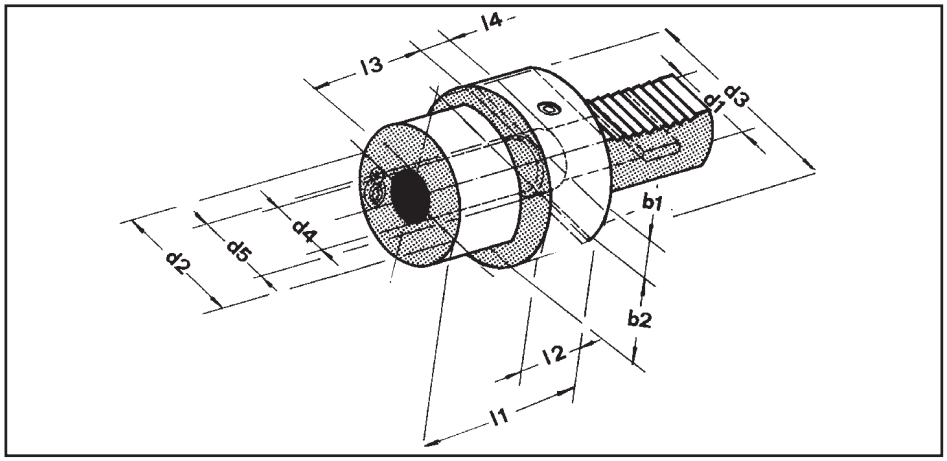

Order No.	Device Type	Dimensions										
		d_1	d_2	d_3	d_4	d_5	b_1	b_2	l_1	l_2	l_3	l_4
F20MKD1	F 20 MK-D1	20	–	50	12.065	13.5	–	23	23	–	16	12
F30MKD1	F 30 MK-D1	30	–	68	12.065	13.5	28	30	27	–	16	12
F30MKD2	F 30 MK-D2	30	–	68	17.780	19.5	28	30	27	–	20	12
F30MKD3	F 30 MK-D3	30	52	68	23.825	24.5	–	28	44	29	15	55
F40MKD2	F 40 MK-D2	40	55	83	17.780	19.5	32.5	–	36	22	20	12
F40MKD3	F 40 MK-D3	40	58	83	23.825	24.5	32.5	–	36	22	30	12
F40MKD4	F 40 MK-D4	40	68	83	31.267	32	32.5	–	80	22	40	14
F50MKD2	F 50 MK-D2	50	55	98	17.780	19.5	35	–	36	30	20	12
F50MKD3	F 50 MK-D3	50	58	98	23.825	24.5	35	–	36	30	30	12
F50MKD4	F 50 MK-D4	50	68	98	31.267	32	35	–	50	30	40	14
F60MKD3	F 60 MK-D3	60	58	123	23.825	24.5	42.5	–	36	30	30	12
F60MKD4	F 60 MK-D4	60	68	123	31.267	32	42.5	–	50	30	40	14
F60MKD5	F 60 MK-D5	60	98	123	44.399	44	42.5	–	63	30	52	16
F80MKD4	F 80 MK-D4	80	68	158	31.267	32	55	–	50	40	40	14
F80MKD5	F 80 MK-D5	80	98	158	44.399	44	55	–	50	40	52	16

CNC Lathe ECX/ER Collet Extensions

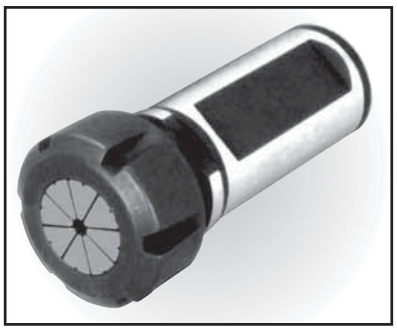

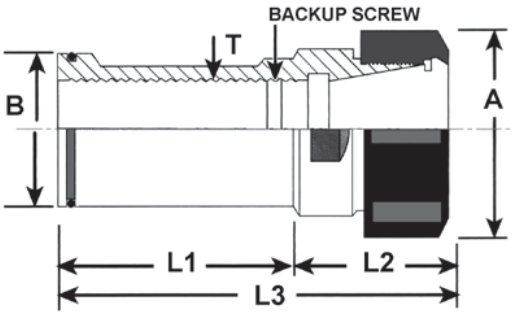

Order No.	Device Type	B (in)	L_1 (mm)	L_2 (mm)	L_3 (mm)	A (mm)	Backup Screw
025-010	ECX25	1-1/4	60	47	107	42	M18 x 1.5
032-010	ECX32	1-1/4	60	58	118	50	M22 x 1.5
040-010	ECX40	1-1/4	60	60	120	63	M28 x 1.5
032-011	ECX32	1-1/2	80	58	138	50	M22 x 1.5
040-011	ECX40	1-1/2	75	60	135	63	M28 x 1.5

TECHLEADER® TOOLING INC.

VDI Toolholders

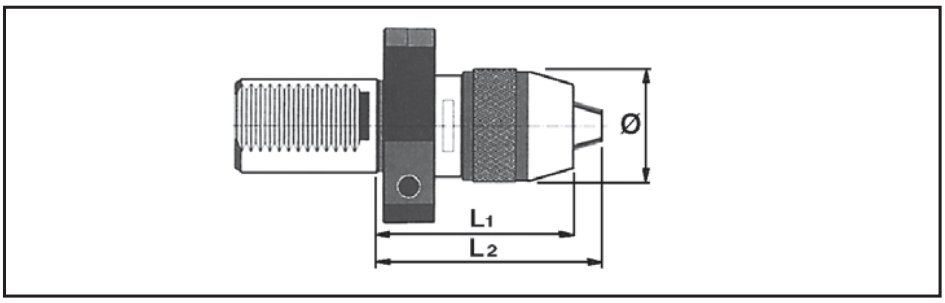

Order No.	Device Type	d_1	Capacity Minimum		Range Ød Maximum		Dimensions Closed L		Closed L_1		Sleeve dia (D)	
		mm	inches	mm	inches	mm	inches	mm	inches	mm	inches	mm
E73008	NPU-08-VDI30	30	0	0	0.3125	8	3.11	79	2.83	72	1.50	38
E73013	NPU-13-VDI30	30	0.031	1	0.500	13	4.13	105	3.70	94	1.89	48
E74013	NPU-13-VDI40	40	0.031	1	0.500	13	3.62	92	3.34	85	1.89	48
E74016	NPU-16-VDI40	40	0.125	3	0.625	16	3.78	96	3.34	85	2.17	55
E75016	NPU-16-VDI50	50	0.125	3	0.625	16	3.86	98	3.43	87	2.17	55
E76016	NPU-16-VDI60	60	0.125	3	0.625	16	3.86	98	3.43	87	2.17	55

Super Precision Short Keyless Drill Chuck With VDI Shank

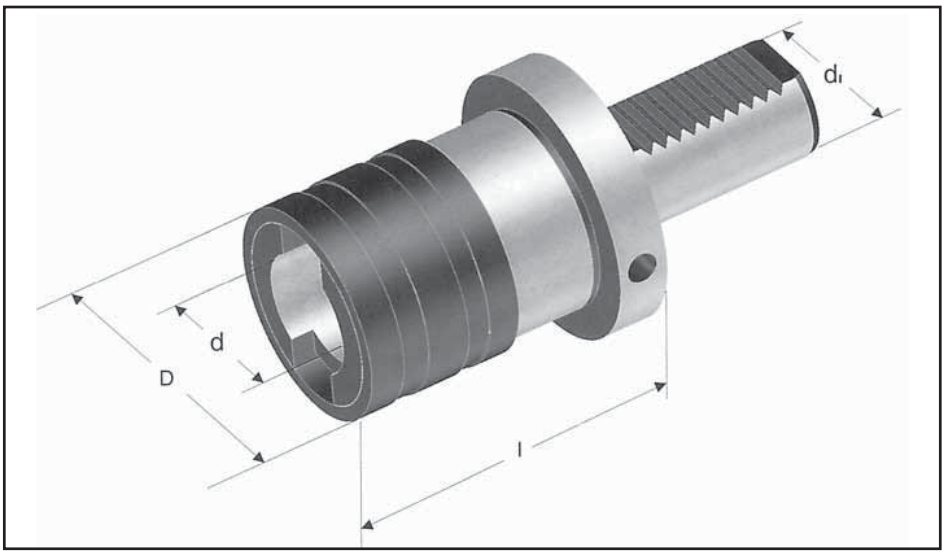

VDI Shank Tappers With Tension & Compression

Order No.	Device Type	d_1	d	D	l	Tap Capacity		Compensation Return	Extra
		mm	mm	mm	mm	inches	mm	mm	mm
E52019	32400 VDI20	20	19	38	55	N0. 6-9/16	M3-M12	9	9
E52031	32600 VDI20	20	31	55	77	5/16-7/8	M8-M20	15	15
E52519	32400 VDI25	25	19	38	55	N0. 6-9/16	M3-M12	9	9
E52531	32600 VDI25	25	31	55	77	5/16-7/8	M8-M20	15	15
E53019	32400 VDI30	30	19	38	55	N0. 6-9/16	M3-M12	9	9
E53031	32600 VDI30	30	31	55	77	5/16-7/8	M8-M20	15	15
E54019	32400 VDI40	40	19	38	55	N0. 6-9/16	M3-M12	9	9
E54031	32600 VDI40	40	31	55	77	5/16-7/8	M8-M20	15	15
E54048	32800 VDI40	40	48	79	110	13/16-1-3/8	M14-M33	24	24
E55048	32800 VDI50	50	48	79	110	13/16-1-3/8	M14-M33	24	24

See pages 3-36 to 3-37 for Quick Change Tap Adapters

TECHLEADER® TOOLING INC.

Boring Bar Sleeves

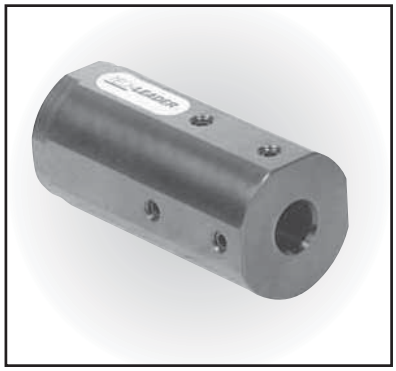

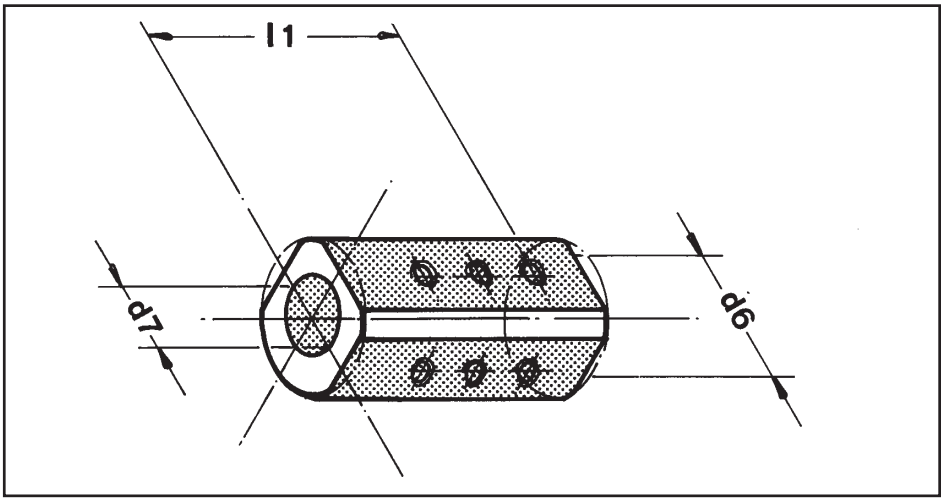

Boring bar sleeves for E2 boring bar holders

Order No.	Device Type	Dimensions		
		d_6	d_7	l_1
E21100250	E2-1 1-1/4	1	1/4	60
E21100375	E2-1 1-3/8	1	3/8	60
E21100500	E2-1 1-1/2	1	1/2	60
E21125250	E2-1 1-1/4-1/4	1-1/4	1/4	70
E21125375	E2-1 1-1/4-3/8	1-1/4	3/8	70
E21125500	E2-1 1-1/4-1/2	1-1/4	1/2	70
E21125625	E2-1 1-1/4-5/8	1-1/4	5/8	70
E21125750	E2-1 1-1/4-3/4	1-1/4	3/4	70
E21150250	E2-1 1-1/2-1/4	1-1/2	1/4	80
E21150375	E2-1 1-1/2-3/8	1-1/2	3/8	80
E21150500	E2-1 1-1/2-1/2	1-1/2	1/2	80
E21150625	E2-1 1-1/2-5/8	1-1/2	5/8	80
E21150750	E2-1 1-1/2-3/4	1-1/2	3/4	80
E21200625	E2-1 2-5/8	2	5/8	90
E21200750	E2-1 2-3/4	2	3/4	90
E212001000	E2-1 2-1	2	1	90
E212001250	E2-1 2-1-1/4	2	1-1/4	90

TAPPING PROBLEMS?

CONTACT US FOR UNIQUE TAPPING SOLUTIONS.

USE HIGH PERFORMANCE TAPS FROM

DC®

THREADING TECHNOLOGY

SWISS MADE

VDI Toolholders

Plugs
Steel and Plastic

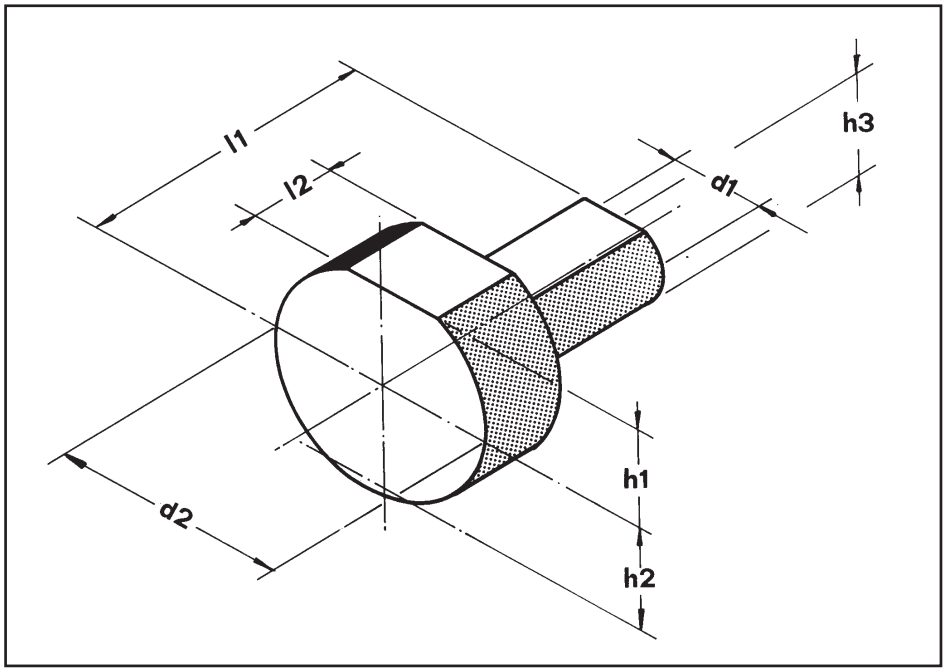

Steel

Order No.	Device Type	Dimensions						
		d_1	d_2	h_1	h_2	h_3	l_1	l_2
Z220	Z2-20	20	50	21	23	17	60	16
Z230	Z2-30	30	68	28	30	26	74	16
Z240	Z2-40	40	83	32.5	–	35	74	20
Z250	Z2-50	50	98	35	–	44	74	20
Z260	Z2-60	60	123	42.5	–	54	74	20
Z280	Z2-80	80	158	55	–	71	74	20

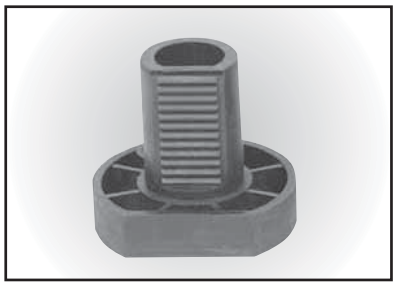

Plastic

Order No.	Device Type	Dimensions						
		d_1	d_2	h_1	h_2	h_3	l_1	l_2
Z2P20	Z2P-20	20	50	21	23	17	60	16
Z2P30	Z2P-30	30	68	28	30	26	74	16
Z2P40	Z2P-40	40	83	32.5	–	35	74	20
Z2P50	Z2P-50	50	98	35	–	44	74	20
Z2P60	Z2P-60	60	123	42.5	–	54	74	20
Z2P80	Z2P-80	80	158	55	–	71	74	20

Spare Parts

Spare Parts for Toolholders Old Design

To order the spare part compare the damaged part with the drawing and specify: Part No. – Toolholder Code

Example: 6-B1 40 x 20 x 44

POS.	Description
1	spring
2	screw
3	adapter
4	plate
5	sphere blocking grain
6	sphere

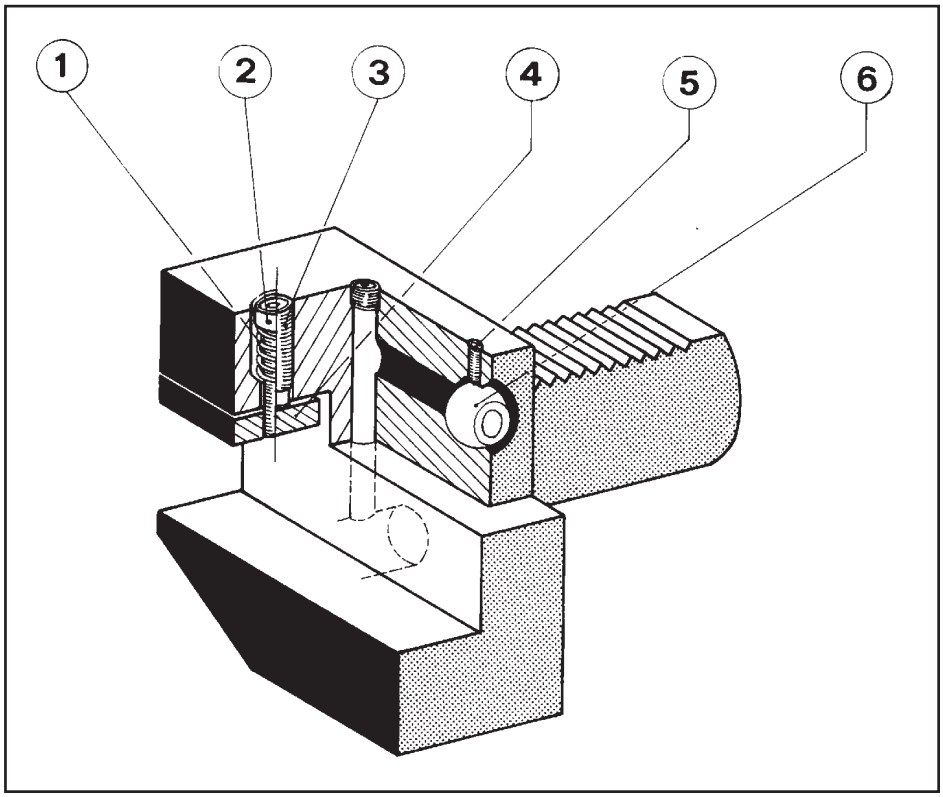

Spare Parts for Toolholders New Design

N.B. For pos. 2,3,4 when ordering please, give toolholder code

Example: Z3 for B1 40 x 25/20

POS.	Code No.	Article
1	1102	spring
2	PB	stop plate
3	PR	reducing plate
4	Z3	cooling nozzle

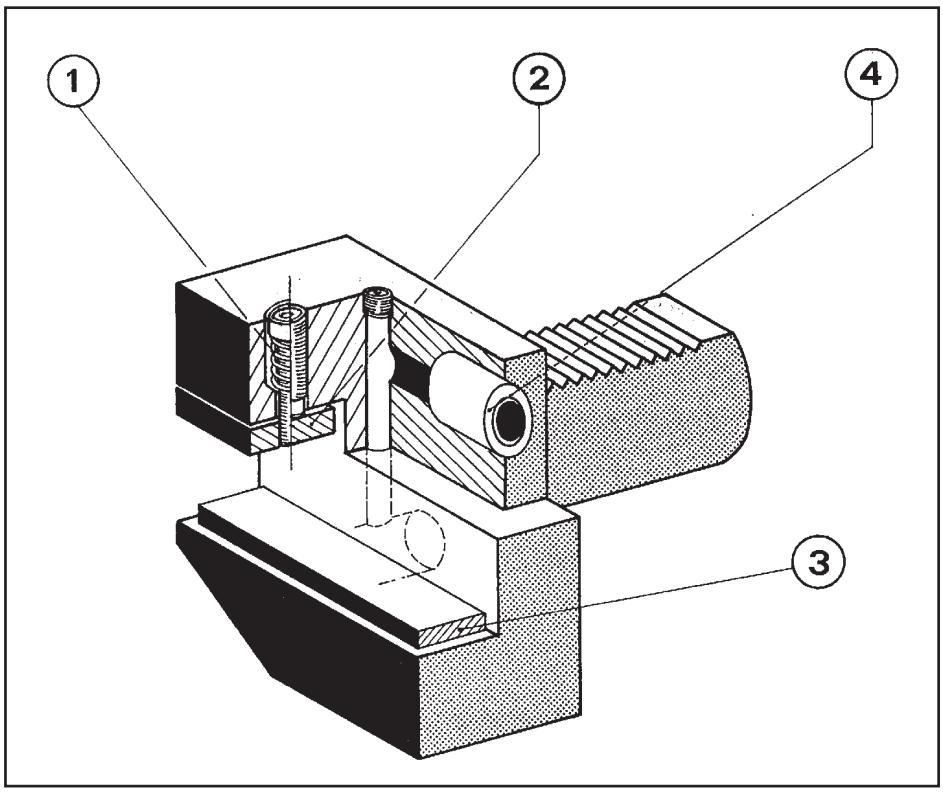

TECHLEADER® TOOLING INC.

Powerpull Bar Puller

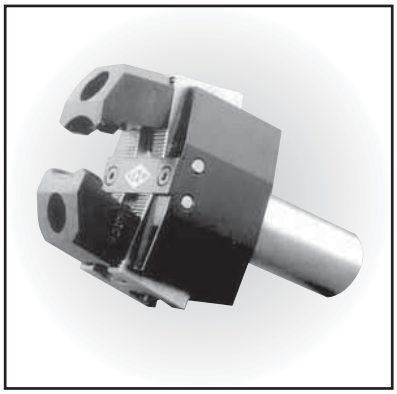

The Powerpull Bar Puller is for use on CNC or Automatic Lathes with an interchangeable tool turret. It is designed to pull bar stock and tubes into position for machining purposes, thus giving the ability for unmanned operation, without the expense and room needed with a bar feeder.

The Powerpull is a two-jaw lever chuck with variable tensioning jaws which cater to most types of material. It comes in two body sizes each with two sizes of jaws. This easy to set Bar Puller has adjustable gripping pressure and comes with a choice of standard or VDI Shanks. Special jaws can be designed and manufactured to suit unusual applications.

• TWO BODY SIZES • BAR CAPACITY 6-90mm
• ADJUSTABLE GRIPPING PRESSURE • STRONG CONSTRUCTION
• UNIT COMES WITH TWO SIZES OF JAWS PLUS CHOICE OF STANDARD SHANK SIZE

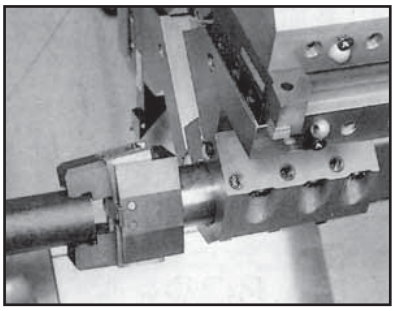

POWERPULL ON TURRET PULLING BAR INTO POSITION

TECHNICAL DATA

Operating Description

The bar stock is initially fed by hand through the machine's hollow spindle to a fixed stop, the bar is then clamped by the spindle-mounted chuck or collet and machining sequence completed. The 'POWERPULL' mounted in the turret is brought towards the headstock and the jaws of the 'POWERPULL' are forced over the bar clamped in the spindle chuck. The spindle chuck is then unclamped and the spring gripping jaws of the 'POWERPULL' grip the bar stock, enabling a positive bar drag out to a predetermined stop position. Spindle chuck is then re-operated to clamp bar and the turret is withdrawn further to release gripping jaws. The bar is then ready for the machining process to be repeated.

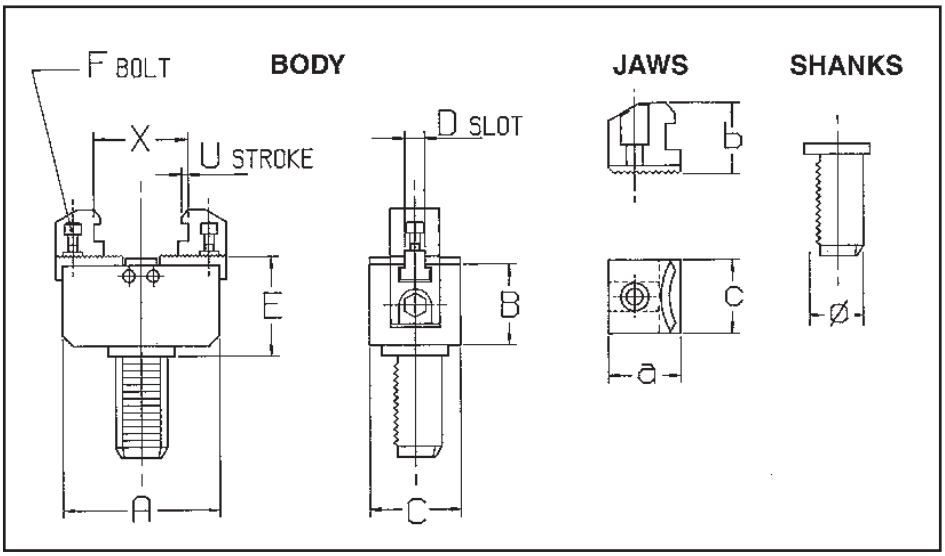

Order No.			Device Type	BODY DATA							JAW DATA				PLAIN SHANKS		VDI SHANKS	CLAMPING FORCE	
Inch	Metric	VDI		A	A	C	D	E	F	U	a	b	c	x	inch	metric		min.	max.
ER041250 ER041500 ER042000	ER0432 ER0440 ER0450	ER04V30 ER04V40 ER04V50	ER04	85	49	50	11	52	M8	2.5	30 23	38 38	29 29	6-36 35-64	1-1/4” 1-1/2” 2”	32mm 40mm 50mm	30 dia. 40 dia. 50 dia.	130	170
ER061250 ER061500 ER062000	ER0632 ER0640 ER0650	ER06V30 ER06V40 ER06V50	ER06	120	60	60	14	65	M12	3	39 32	38 38	32 32	6-60 50-90	1-1/4” 1-1/2” 2”	32mm 40mm 50mm	30 dia. 40 dia. 50 dia.	200	270

TECHLEADER® TOOLING INC.

Coupling for VDI Driven Tools

DIN 69880

Baruffaldi

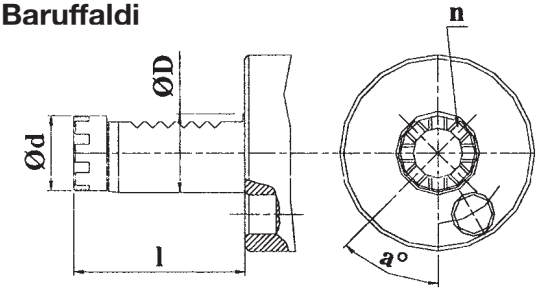

ØD (mm)	20	25	30	40	50			
1 (mm)	44	51	59	68	84			
Ød(mm)	19	24	24	32	40			
n (mm)	6	6	6	8	8			
a°	60	60	60	45	45			
Code	...25	...26	...27	...28	...29			

Din 1809

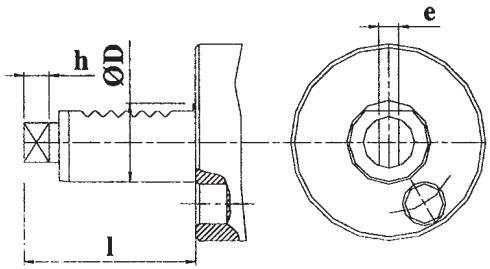

ØD (mm)	20	25	30	40	50	60		
1	48	57	62	72	92	110		
Ød(mm)	10	12	12	18	24	29		
e (mm)	5	6	6	8	12	14		
h (mm)	6.5	7	7	6.5	13	14		
Code	...16	...17	...18	...19	...20	...21		

Sauter (Din 5482)

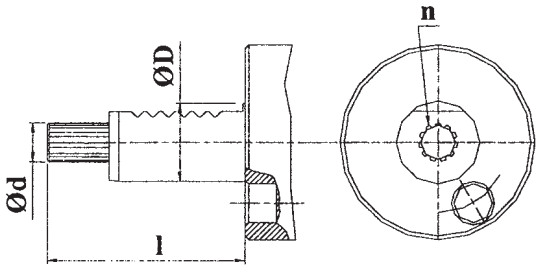

ØD (mm)	16	20	30	40	50	60	80	
1 (mm)	44	51	55	63	93	108	144	
Ød(mm)	15.5	9.84	14.5	16.5	19.5	24.5	27.5	
n (mm)	13	11	8	9	12	14	15	
Code	...01	...02	...06	...09	...11	...13	...15	

Sauter (Din 5480)

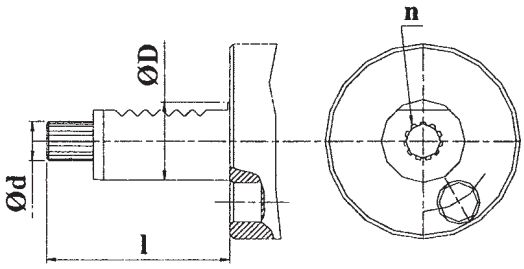

ØD (mm)	16	20	25	30	40	50	60	80
1 (mm)	39	47	57	67	75	93	109	139
Ød(mm)	8	10	14	16	20	24	30	30
n (mm)	8	11	16	18	24	18	22	22
Code	...49	...50	...51	...52	...53	...54	...55	...56

TECHLEADER® TOOLING INC.

Axial VDI Drilling & Milling Heads

DIN 69880

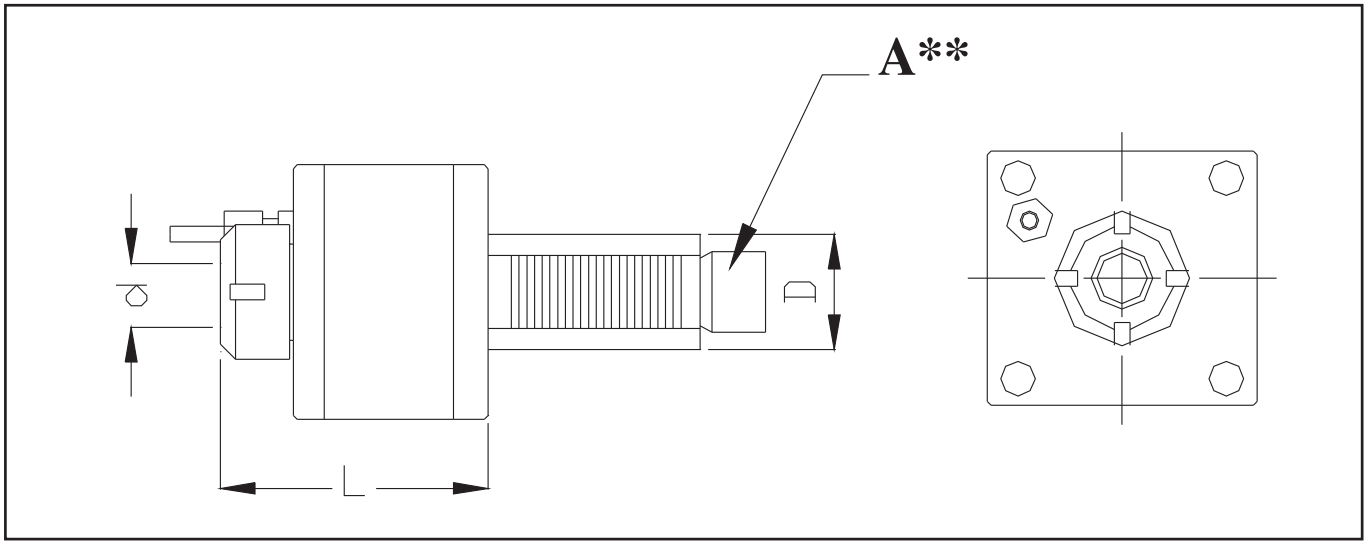

ORDER NO.	D(mm)	d Collet Style	L(mm)	RPM Max	Ratio	Nm	Kg.
TE16A07....	16	ECX/ER11	82	6000	1:1	15	1.1
TE20A10...	20	ECX/ER16	82	6000	1:1	15	1.1
TE30A13...	30	ECX/ER20	100	6000	1:1	25	2.8
TE40A20...	40	ECX/ER32	110	6000	1:1	60	4.0
TE50A20...	50	ECX/ER32	110	6000	1:1	80	4.8
TE50A26...	50	ECX/ER40	123	4500	1:1	80	4.9

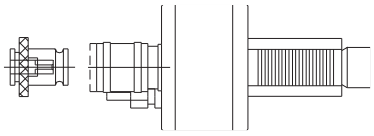

TAPPING HEAD (BILZ) - ON REQUEST

A** / D (mm)	Baruffaldi	Din 1809	Sauter Din 5482	Sauter Din 5480
16	–	–	...01	...49
20	...25	...17	...02	...50
30	...27	...18	...06	...52
40	...28	...19	...09	...53
50	...29	...20	...11	...54

Example:

d = ECX/ER32
D = 40
A** = SAUTER DIN 5482
ORDER NO. = TE40A2009

TECHLEADER® TOOLING INC.

Axial Offset VDI Drilling & Milling Heads

DIN 69880

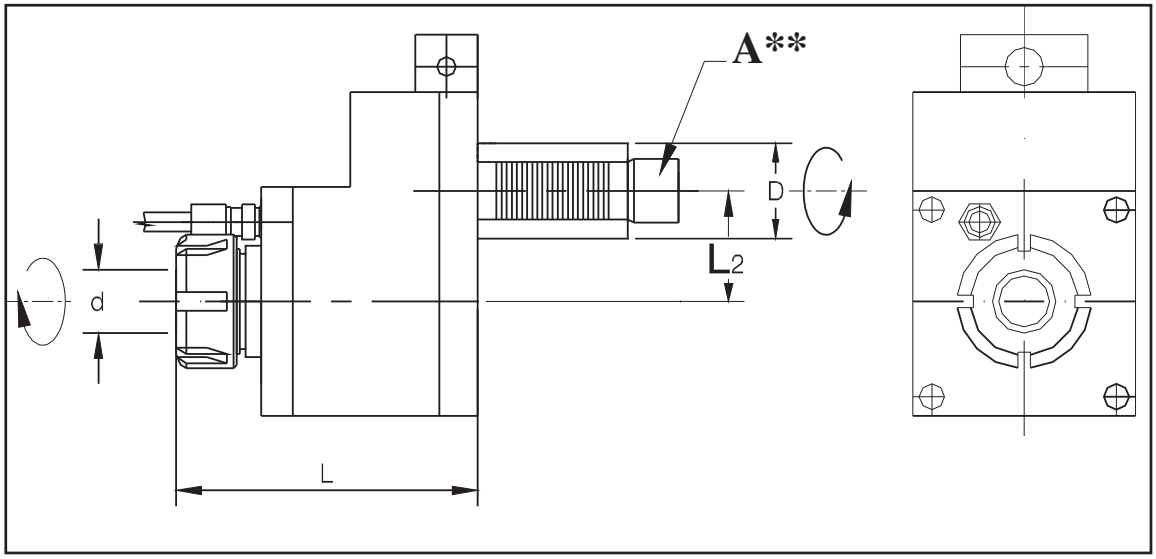

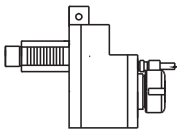

LEFT VERSION

ORDER NO.	Dh6	d	L2	L	n. Max	Ratio	Nm	Kg.
TE16F07...	**16**	ECX/ER11	32	70	6000	1:1	15	1.1
TE30F13...	**30**	ECX/ER20	44	110	6000	1:1	25	3.5
TE40F20...	**40**	ECX/ER32	50	120	6000	1:1	50	4.5
TE50F20...	**50**	ECX/ER32	50	120	4500	1:1	50	7.8

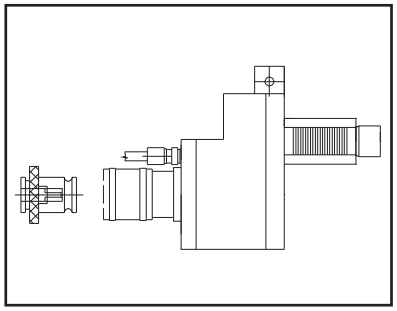

TAPPING HEAD (BILZ)
- ON REQUEST

A** / D (mm)	Baruffaldi	Din 1809	Sauter Din 5482	Sauter Din 5480
16	–	–	...01	...49
20	...25	...17	...02	...50
30	...27	...18	...06	...52
40	...28	...19	...09	...53
50	...29	...20	...11	...54

Example:

d = ECX/ER32
D = 40
A** = SAUTER DIN 5482
ORDER NO. = TE40F2009

TECHLEADER® TOOLING INC.

Radial VDI Drilling & Milling Heads

DIN 69880

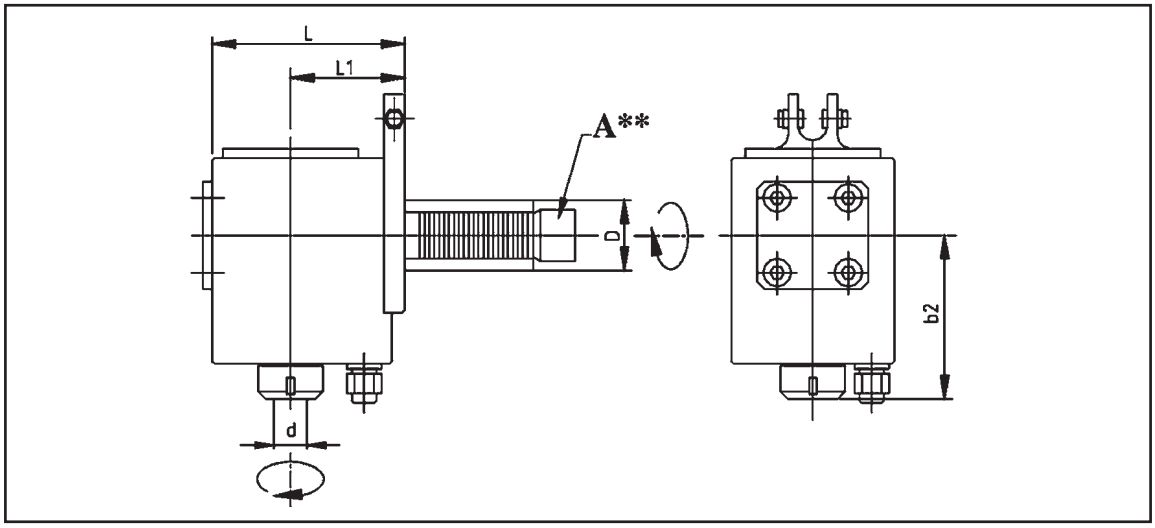

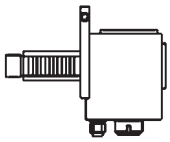

LEFT VERSION

ORDER NO.	D (mm)	d	L (mm)	L1 (mm)	b2 (mm)	RPM Max	Ratio	Nm	Kg.
TE30B13...	**30**	ECX/ER20	102	53	90	6000	1:1	25	3.8
TE40B20...	**40**	ECX/ER32	109	64	98	6000	1:1	50	6.0
TE50B20...	**50**	ECX/ER32	109	64	98	6000	1:1	50	6.8
TE50B26...	**50**	ECX/ER40	109	64	100	4500	1:1	50	7.0

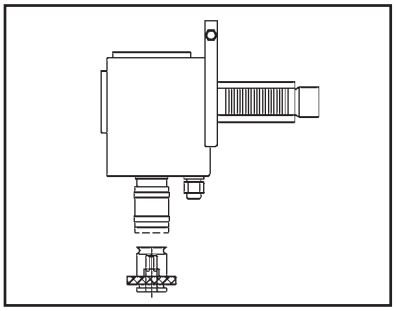

TAPPING HEAD (BILZ)
- ON REQUEST

A** / D (mm)	Baruffaldi	Din 1809	Sauter Din 5482	Sauter Din 5480
16	–	–	...01	...49
20	...25	...17	...02	...50
30	...27	...18	...06	...52
40	...28	...19	...09	...53
50	...29	...20	...11	...54

Example:

d = ECX/ER32
D = 40
A** = SAUTER DIN 5482
ORDER NO. = TE40B2009

TECHLEADER® TOOLING INC.

Radial Offset VDI Drilling & Milling Heads

DIN 69880

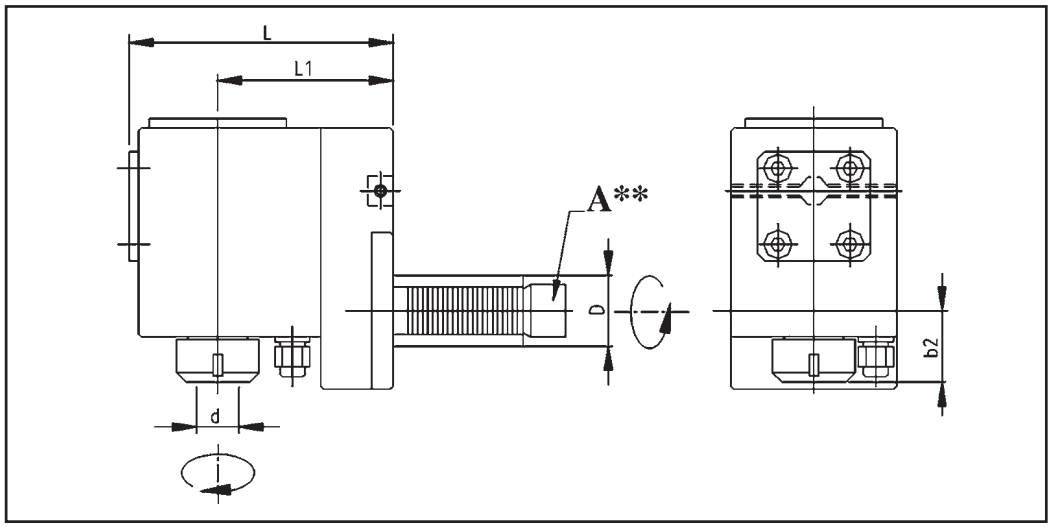

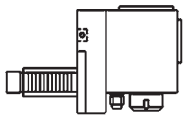

LEFT VERSION

ORDER NO.	D (mm)	d	L (mm)	L1 (mm)	b2 (mm)	RPM Max	Ratio	Nm	Kg.
TE16C07...	**16**	ECX/ER11	70	48	28	6000	1:1	10	1.2
TE20C10...	**20**	ECX/ER16	70	48	37	6000	1:1	10	1.3
TE30C13...	**30**	ECX/ER20	106	70	48.5	6000	1:1	25	5.0
TE40C20...	**40**	ECX/ER32	130	86	40	6000	1:1	50	6.5
TE50C20...	**50**	ECX/ER32	130	86	40	6000	1:1	50	8.2
TE50C26...	**50**	ECX/ER40	140	100	45	4500	1:1	50	9.0

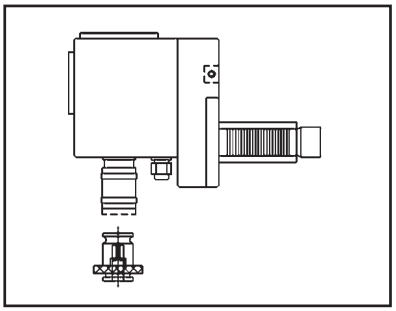

TAPPING HEAD (BILZ)
- ON REQUEST

A** / D (mm)	Baruffaldi	Din 1809	Sauter Din 5482	Sauter Din 5480
16	–	–	...01	...49
20	...25	...17	...02	...50
30	...27	...18	...06	...52
40	...28	...19	...09	...53
50	...29	...20	...11	...54

Example:

d = ECX/ER32
D = 40
A** = SAUTER DIN 5482
ORDER NO. = TE40B2009

TECHLEADER® TOOLING INC.

Universal Angle VDI Drilling & Milling Heads (0-90°)

DIN 69880

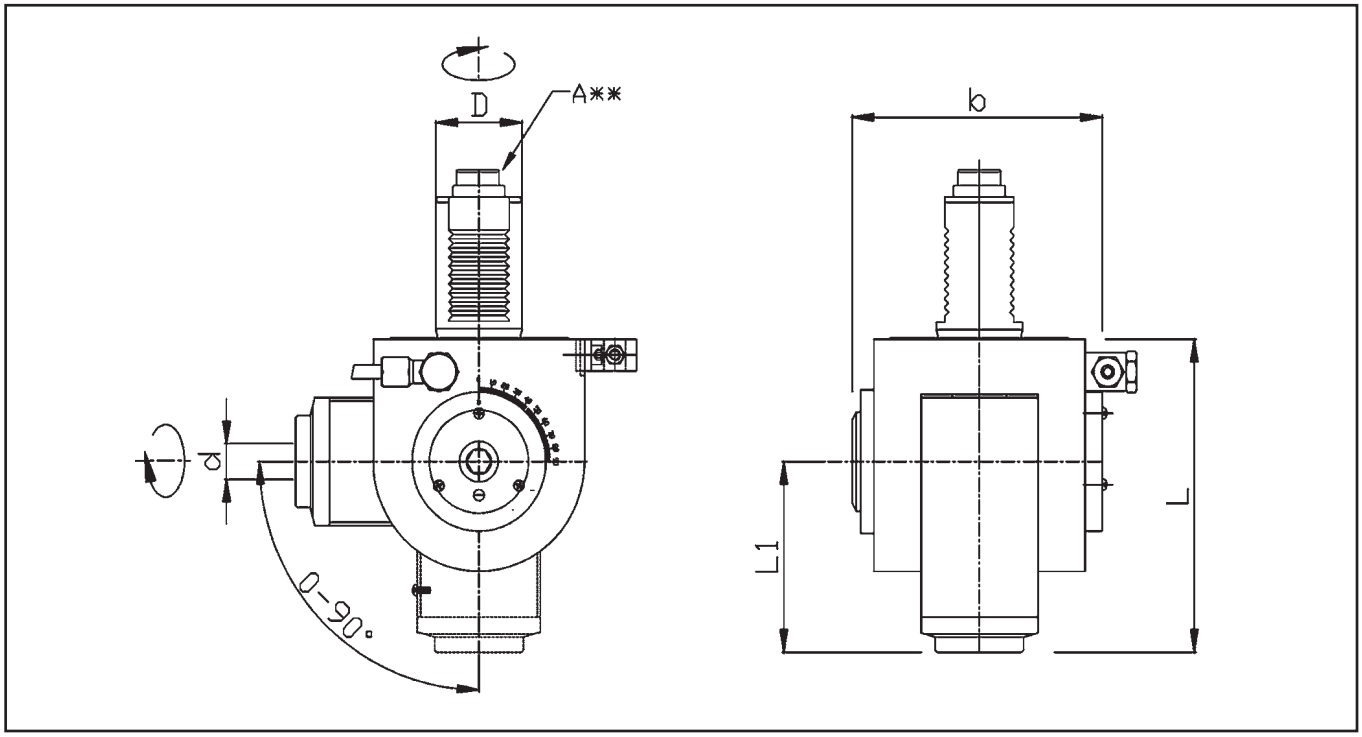

ORDER NO.	D (mm)	d	L (mm)	L1 (mm)	b (mm)	RPM Max	Ratio	Nm	Kg.
TE30E10...	**30**	ECX/ER16	115	75	92	6000	1:1	10	4.5
HE40E16...	**40**	ECX/ER25	140	85	116	6000	1:1	10	6.8
HE50E16...	**50**	ECX/ER25	140	85	116	6000	1:1	25	7.2

A** / D (mm)	*Baruffaldi*	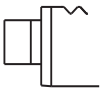 *Din 1809*	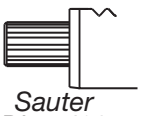 *Sauter Din 5482*	*Sauter Din 5480*
16	–	–	...01	...49
20	...25	...17	...02	...50
30	...27	...18	...06	...52
40	...28	...19	...09	...53
50	...29	...20	...11	...54

TECHLEADER® TOOLING INC.

Slitting Saw VDI Drilling & Milling Heads

DIN 69880

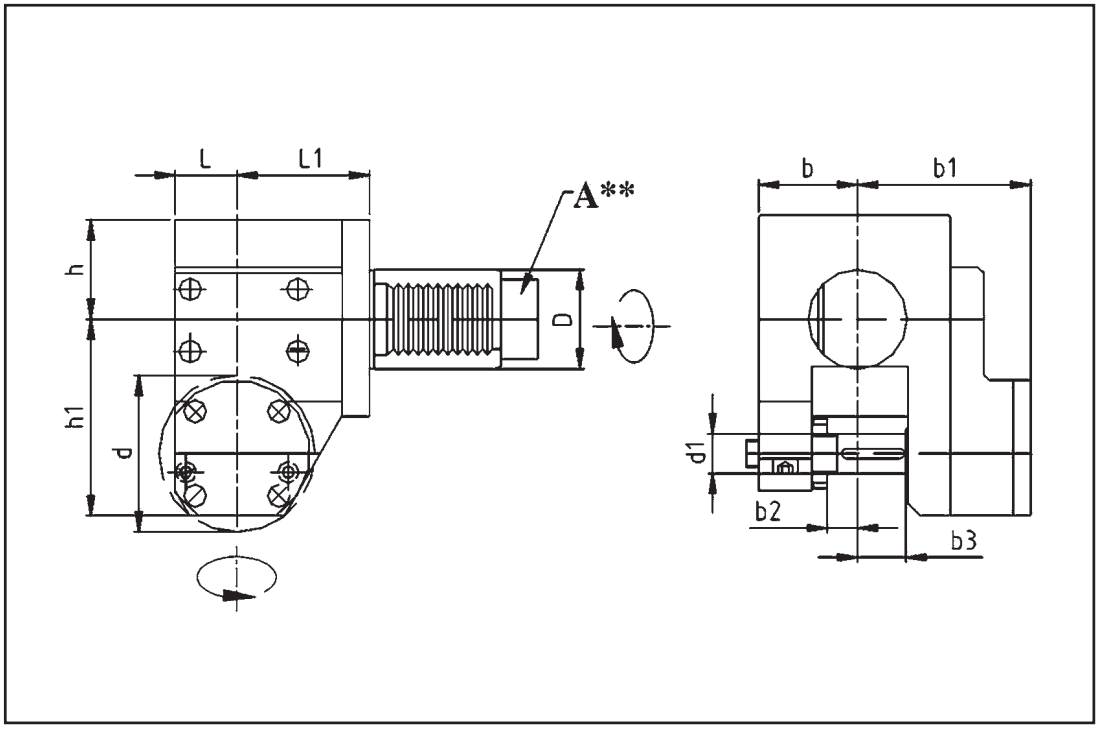

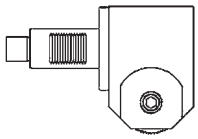

LEFT VERSION

ORDER NO.	D (mm)	d (mm)	d1 (mm)	h (mm)	h1 (mm)	L (mm)	L1 (mm)	b (mm)	b1 (mm)	b2 (mm)	b3 (mm)	RPM Max	Ratio	Nm	Kg.
TD30V63...	**30**	63	16	42	80	25	54	40	70	12	18	2000	1:1	25	5.5
TD40V63...	**40**	63	16	42	80	25	54	40	70	12	18	2000	1:1	25	6.5
TD50V63...	**50**	63	16	42	80	25	54	40	70	12	18	2000	1:1	25	8.2

A** / D (mm)	*Baruffaldi*	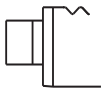 *Din 1809*	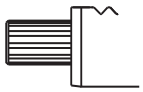 *Sauter Din 5482*	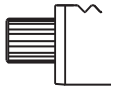 *Sauter Din 5480*
16	–	–	...01	...49
20	...25	...17	...02	...50
30	...27	...18	...06	...52
40	...28	...19	...09	...53
50	...29	...20	...11	...54

TECHLEADER® TOOLING INC.

Axial Adjustable Y-Axis VDI Drilling & Milling Heads

DIN 69880

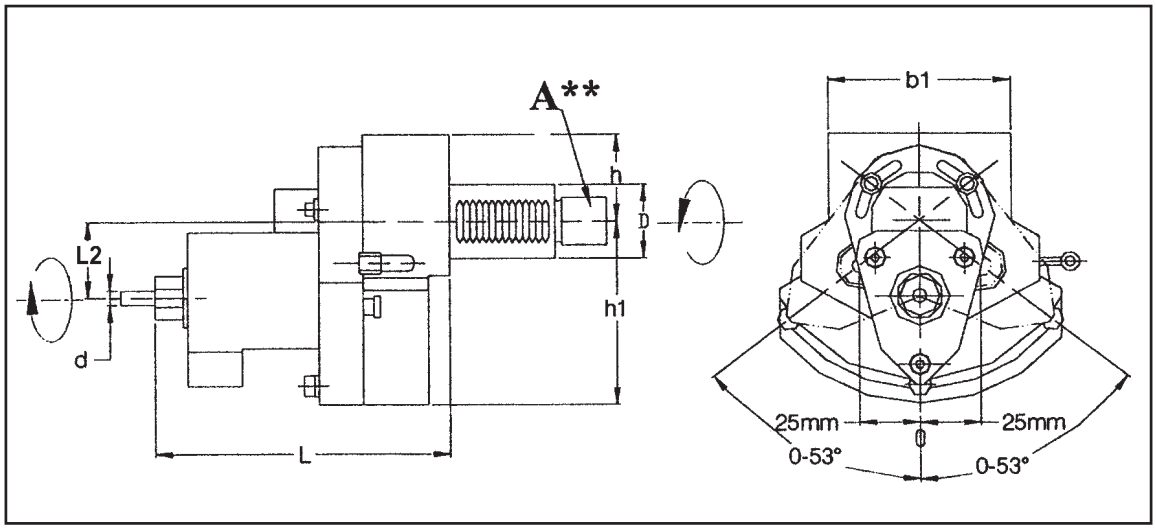

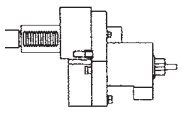

LEFT VERSION

ORDER NO.	D (mm)	d	L2 (mm)	L (mm)	h (mm)	h1 (mm)	b1 (mm)	RPM Max	Ratio	Nm
TE30H10...	**30**	ECX/ER20	31.5	120	40	75	80	6000	1:1	25
TE40H10...	**40**	ECX/ER32	31.5	120	40	75	80	6000	1:1	25
TE50H10...	**50**	ECX/ER40	31.5	120	40	75	80	6000	1:1	25

A** / D (mm)	*Baruffaldi*	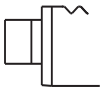 *Din 1809*	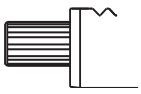 *Sauter Din 5482*	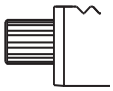 *Sauter Din 5480*
16	–	–	...01	...49
20	...25	...17	...02	...50
30	...27	...18	...06	...52
40	...28	...19	...09	...53
50	...29	...20	...11	...54

WORKING EXAMPLE

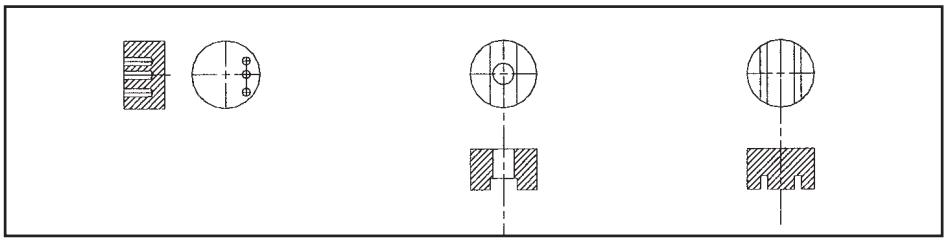

TECHLEADER® TOOLING INC.

Radial Adjustable Y-Axis Drilling Heads

DIN 69880

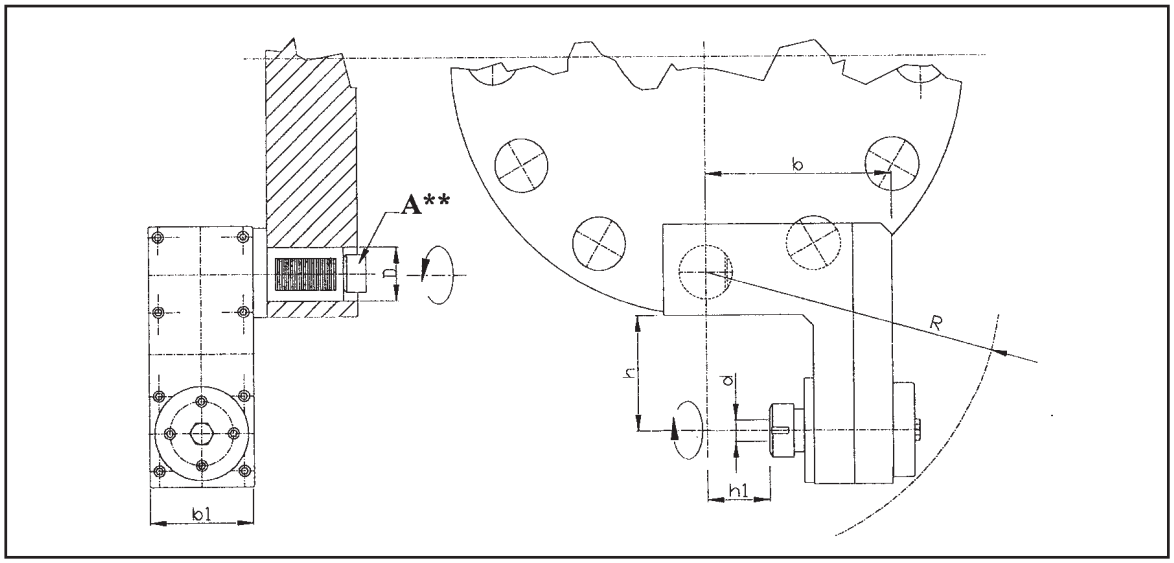

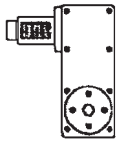

LEFT VERSION

ORDER NO.	D (mm)	d	R (mm)	h (mm)	h1 (mm)	b (mm)	b1 (mm)	RPM Max	Ratio	Nm	kg.
TE30D13...	**30**	ECX/ER20	170	45	25	140	70	4500	1:1	25	7.0
TE40D20...	**40**	ECX/ER32	200	80	30	140	80	4500	1:1	25	8.3
TE50D20...	**50**	ECX/ER40	275	148	50	200	98	4500	1:1	25	9.1

A** / D (mm)	*Baruffaldi*	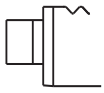 *Din 1809*	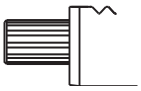 *Sauter Din 5482*	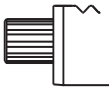 *Sauter Din 5480*
16	–	–	...01	...49
20	...25	...17	...02	...50
30	...27	...18	...06	...52
40	...28	...19	...09	...53
50	...29	...20	...11	...54

WORKING EXAMPLE

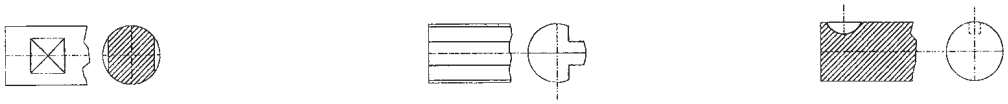

TECHLEADER® TOOLING INC.

Coupling for VDI Driven Tools

DIN 69880

Baruffaldi

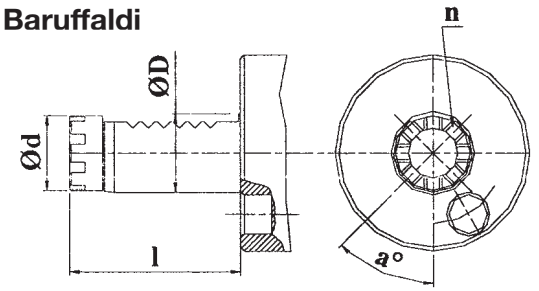

ØD (mm)	20	25	30	40	50			
1 (mm)	44	51	59	68	84			
Ød (mm)	19	24	24	32	40			
n (mm)	6	6	6	8	8			
a°	60	60	60	45	45			
Code	...25	...26	...27	...28	...29			

Din 1809

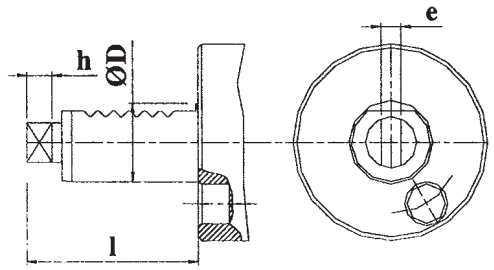

ØD (mm)	20	25	30	40	50	60		
1	48	57	62	72	92	110		
Ød (mm)	10	12	12	18	24	29		
e (mm)	5	6	6	8	12	14		
h (mm)	6.5	7	7	6.5	13	14		
Code	...16	...17	...18	...19	...20	...21		

Sauter (Din 5482)

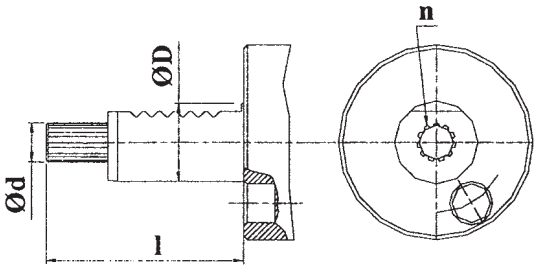

ØD (mm)	16	20	30	40	50	60	80	
1 (mm)	44	51	55	63	93	108	144	
Ød (mm)	15.5	9.84	14.5	16.5	19.5	24.5	27.5	
n (mm)	13	11	8	9	12	14	15	
Code	...01	...02	...06	...09	...11	...13	...15	

Sauter (Din 5480)

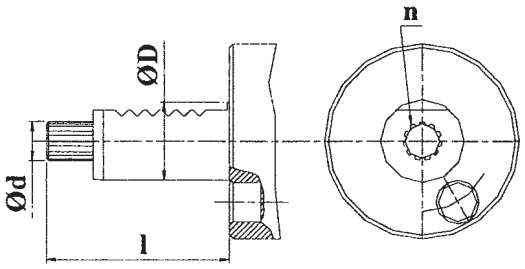

ØD (mm)	16	20	25	30	40	50	60	80
1 (mm)	39	47	57	67	75	93	109	139
Ød (mm)	8	10	14	16	20	24	30	30
n (mm)	8	11	16	18	24	18	22	22
Code	...49	...50	...51	...52	...53	...54	...55	...56

TECHLEADER® TOOLING INC.

Axial VDI Drilling And Milling Heads

Flush Nut DIN 69880

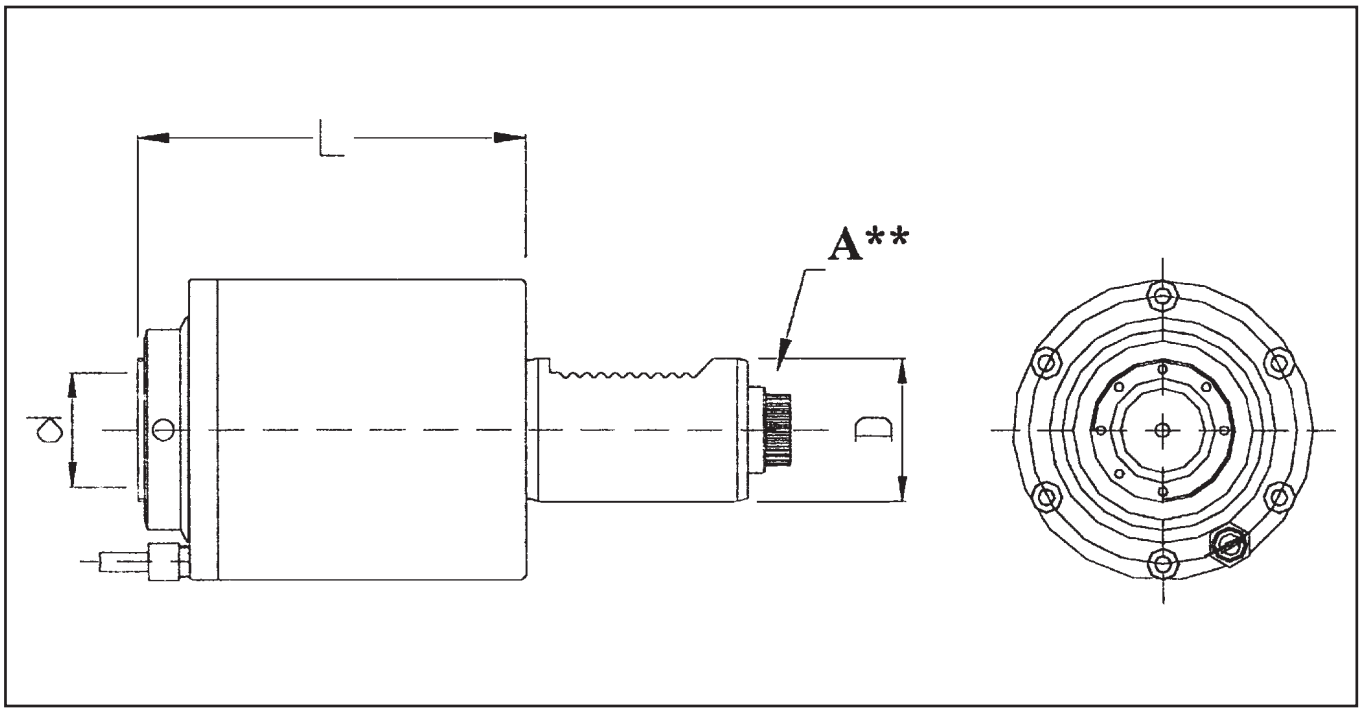

ORDER NO.	D (mm)	d	L (mm)	RPM Max	Ratio	Nm	Kg.
HE20A13...	**20**	ECX/ER16	61.5	6000	1:1	13	1.1
HE30A16...	**30**	ECX/ER25	71	6000	1:1	25	2.8
HE40A20...	**40**	ECX/ER25	110	6000	1:1	50	4.0

A** / D (mm)	Baruffaldi	Din 1809	Sauter Din 5482	Sauter Din 5480
16	–	–	...01	...49
20	...25	...17	...02	...50
30	...27	...18	...06	...52
40	...28	...19	...09	...53
50	...29	...20	...11	...54

TECHLEADER® TOOLING INC.

Radial VDI Drilling And Milling Heads

Flush Nut DIN 69880

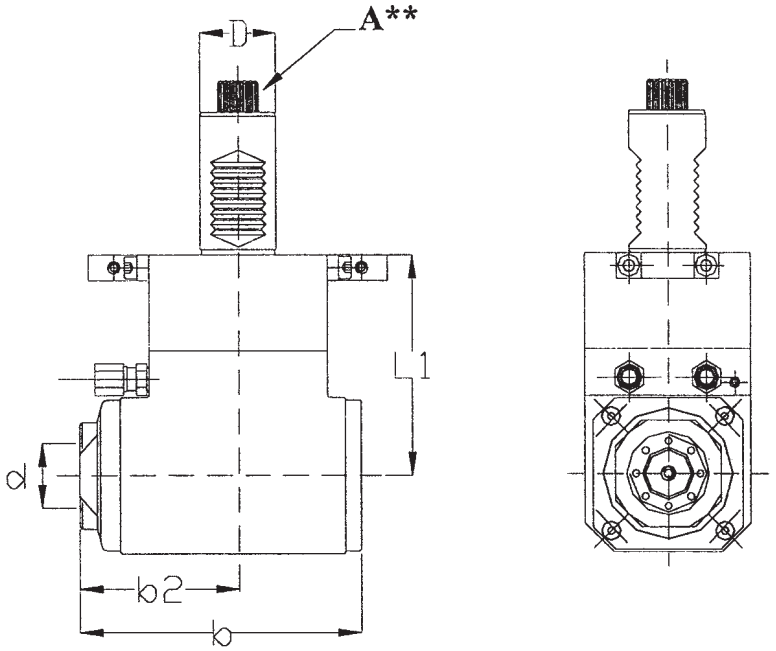

ORDER NO.	D (mm)	d	L1 (mm)	b (mm)	b2 (mm)	RPM Max	Ratio	Nm	Kg.
HE20B13...	**20**	ECX/ER20	75	97.5	55.5	6000	1:1	13	1.2
HE30B16...A	**30**	ECX/ER25	55	110.5	62.5	6000	1:1	25	3.9
HE30B16...B	**30**	ECX/ER25	85	110.5	62.5	6000	1:1	25	4.4
HE30B16...C	**30**	ECX/ER25	100	110.5	62.5	6000	1:1	25	4.6
HE40B20...A	**40**	ECX/ER32	100	130.5	75.5	6000	1:1	50	6.8
HE40B20...B	**40**	ECX/ER32	120	130.5	75.5	6000	1:1	50	7.0

A** / D (mm)	*Baruffaldi*	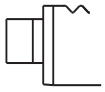 *Din 1809*	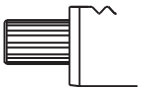 *Sauter Din 5482*	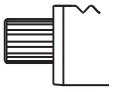 *Sauter Din 5480*
16	–	–	...01	...49
20	...25	...17	...02	...50
30	...27	...18	...06	...52
40	...28	...19	...09	...53
50	...29	...20	...11	...54

TECHLEADER® TOOLING INC.

Radial VDI Double Spindle & Milling Heads

Flush Nut DIN 69880

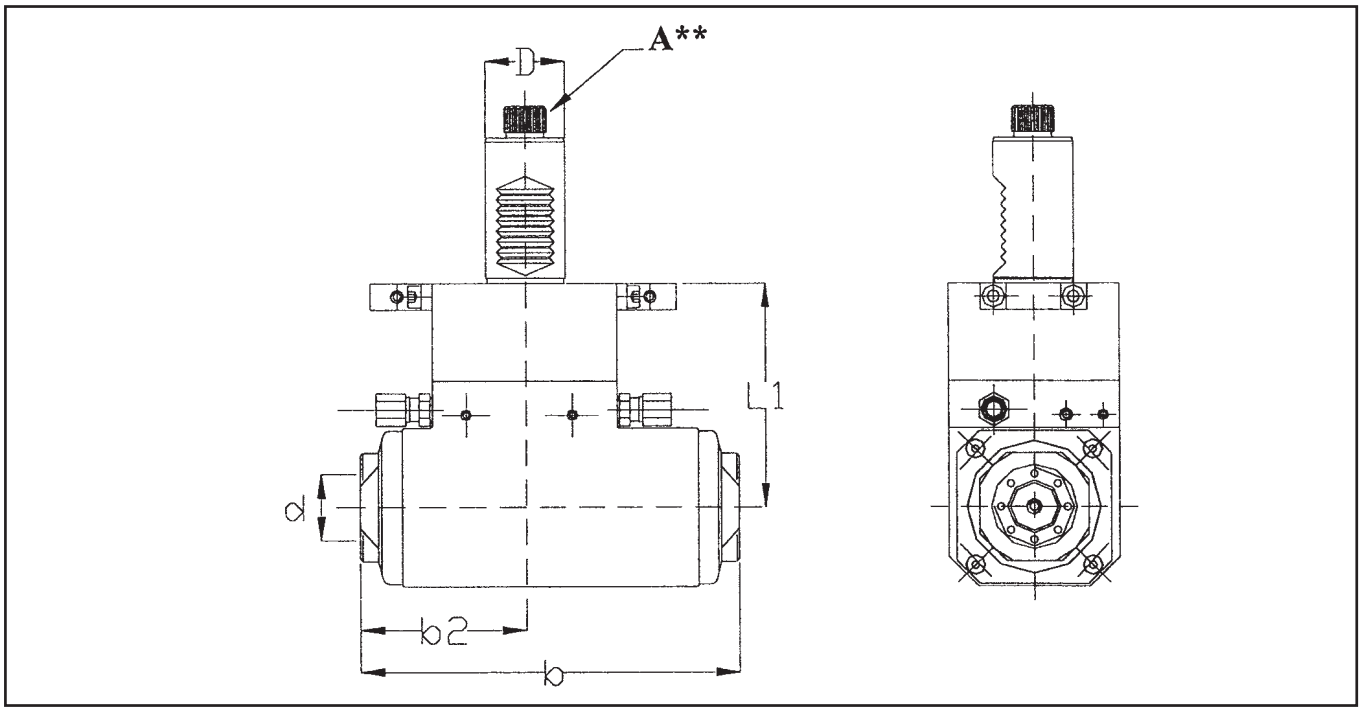

ORDER NO.	D (mm)	d	L1 (mm)	b (mm)	b2 (mm)	RPM Max	Ratio	Nm	Kg.
HE20L13...	**20**	ECX/ER20	75	131.5	54	6000	1:1	13	2.4
HE30L16...A	**30**	ECX/ER25	85	145	64	6000	1:1	25	5.4
HE30L16...B	**30**	ECX/ER25	100	145	64	6000	1:1	25	5.6
HE40L20...A	**40**	ECX/ER32	100	176	76	6000	1:1	50	8.5
HE40L20...B	**40**	ECX/ER32	120	176	76	6000	1:1	50	8.8

A** / D (mm)	*Baruffaldi*	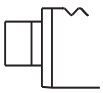 *Din 1809*	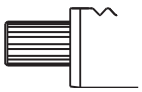 *Sauter Din 5482*	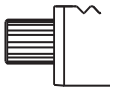 *Sauter Din 5480*
16	–	–	...01	...49
20	...25	...17	...02	...50
30	...27	...18	...06	...52
40	...28	...19	...09	...53
50	...29	...20	...11	...54

TECHLEADER® TOOLING INC.

Radial VDI (Short) Drilling & Milling Heads

Flush Nut DIN 69880

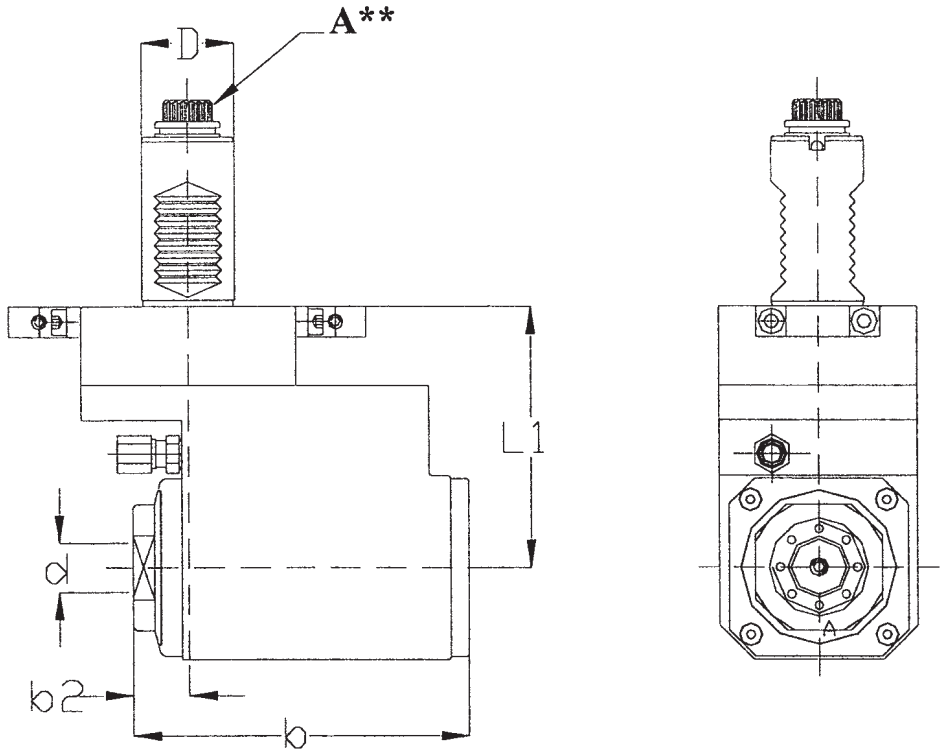

ORDER NO.	D (mm)	d	L1 (mm)	b (mm)	b2 (mm)	RPM Max	Ratio	Nm	Kg.
HE20C13...	**20**	ECX/ER20	61.5	100	20	6000	1:1	13	1.4
HE30C16...A	**30**	ECX/ER25	68.5	112	20	6000	1:1	25	6.0
HE40C20...B	**40**	ECX/ER32	80	136	28	6000	1:1	50	7.8

A** / D (mm)	*Baruffaldi*	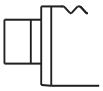 *Din 1809*	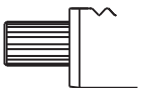 *Sauter Din 5482*	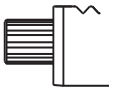 *Sauter Din 5480*
16	–	–	...01	...49
20	...25	...17	...02	...50
30	...27	...18	...06	...52
40	...28	...19	...09	...53
50	...29	...20	...11	...54

TECHLEADER® TOOLING INC.

Universal Angle VDI 0-90º Driven Tools

Flush Nut DIN 69880

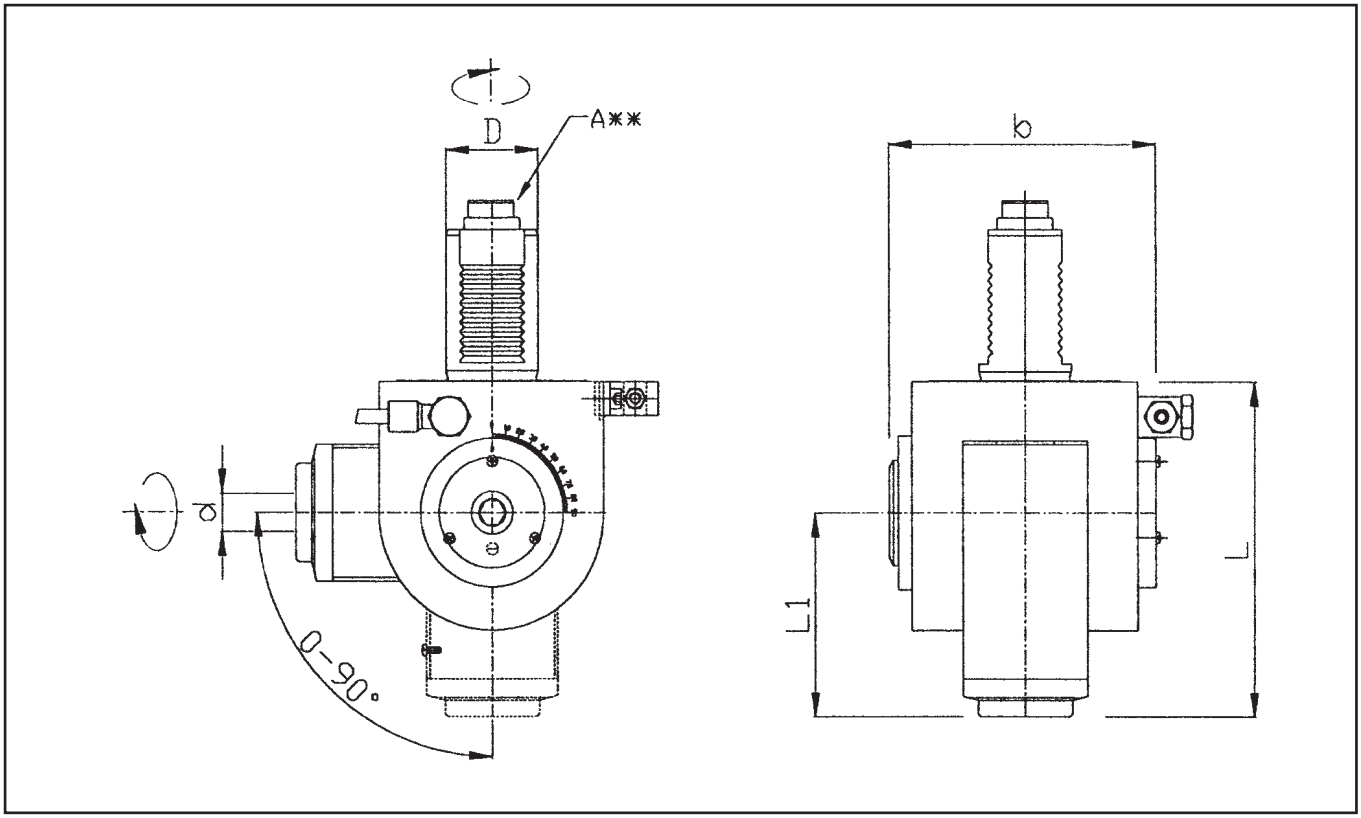

ORDER NO.	D (mm)	d	L1 (mm)	b (mm)	b2 (mm)	RPM Max	Ratio	Nm	Kg.
TE30E10...	**20**	ECX/ER20	115	75	92	6000	1:1	10	4.5
HE40E16...	**40**	ECX/ER32	140	85	116	6000	1:1	25	6.8

A** / D (mm)	Baruffaldi	Din 1809	Sauter Din 5482	Sauter Din 5480
16	–	–	...01	...49
20	...25	...17	...02	...50
30	...27	...18	...06	...52
40	...28	...19	...09	...53
50	...29	...20	...11	...54

TECHLEADER® TOOLING INC.

DAEWOO/DOOSAN
Axial Drilling And Milling Heads

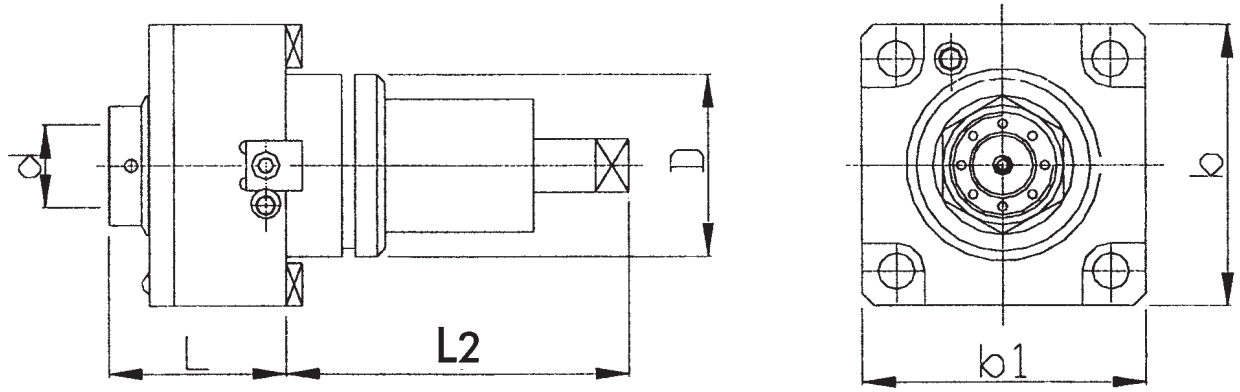

ORDER NO.	D (mm)	d	L2 (mm)	L (mm)	b (mm)	b1 (mm)	RPM Max	Ratio	Nm	Kg.
HE55DA16	**55**	ECX/ER25	104	54	85	85	6000	1:1	25	5.5
HE75DA26	**75**	ECX/ER40	110	75	112	112	6000	1:1	50	8.0

Radial Drilling And Milling Heads

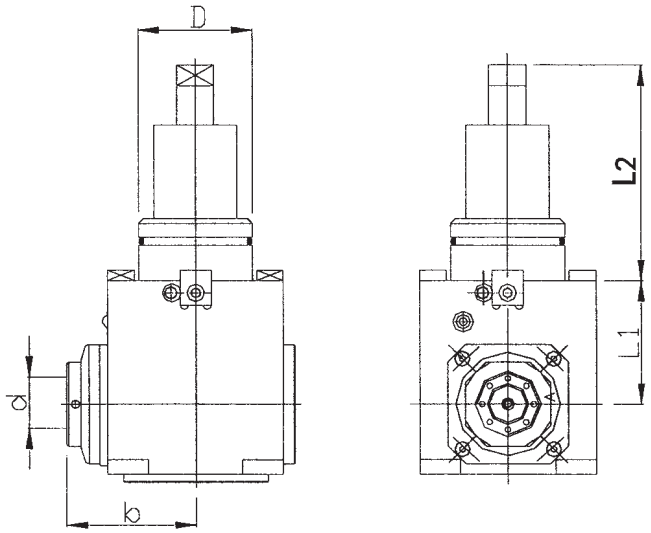

ORDER NO.	D (mm)	d	L2 (mm)	L1 (mm)	b (mm)	RPM Max	Ratio	Nm	Kg.
HE55DB16	**55**	ECX/ER25	104	60	62	6000	1:1	25	8.0
HE75DB26	**75**	ECX/ER40	110	60	112	6000	1:1	25	12.0

DAEWOO/DOOSAN
Radial Double Drilling & Milling Heads

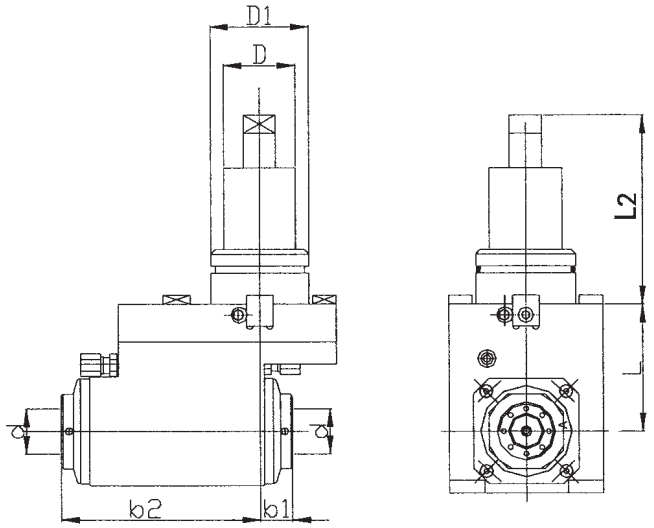

ORDER NO.	D (mm)	d	L2 (mm)	L (mm)	b1 (mm)	b2 (mm)	RPM Max	Ratio	Nm	Kg.
HE55DL16	55	ECX/ER25	104	70	19	110	6000	1:1	25	12.0

Universal Angle Drilling & Milling Heads

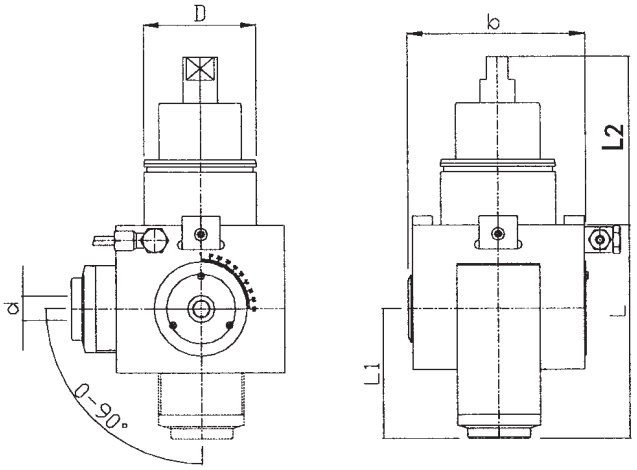

ORDER NO.	D (mm)	d	L2 (mm)	L (mm)	b1 (mm)	b2 (mm)	RPM Max	Ratio	Nm	Kg.
TE55DE10	55	ECX/ER16	104	115	76	92	6000	1:1	10	4.5
HE75DE16	75	ECX/ER25	110	140	85	116	6000	1:1	25	8.0

TECHLEADER® TOOLING INC.

HAAS DIN 69880 VDI

Axial Drilling And Milling Heads

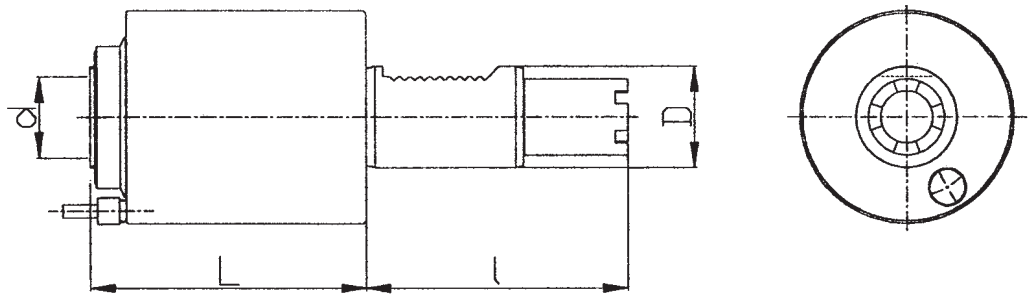

ORDER NO.	D (mm)	HAAS TURRET	VDI TURRET	1 (mm)	d	L (mm)	RPM Max	Ratio	Nm	Kg.
HE40A2090	40	–	SL-20/30	104.85 (4.128")	ECX/ER32	110	6000	1:1	50	4.0
HE40A2091	40	SL-20/30	SL-40/TL-15	117.55 (4.628")	ECX/ER32	110	6000	1:1	50	4.0
HE40A2092	40	SL-40	–	130.25 (5.128")	ECX/ER32	110	6000	1:1	50	4.1

Radial Drilling And Milling Heads

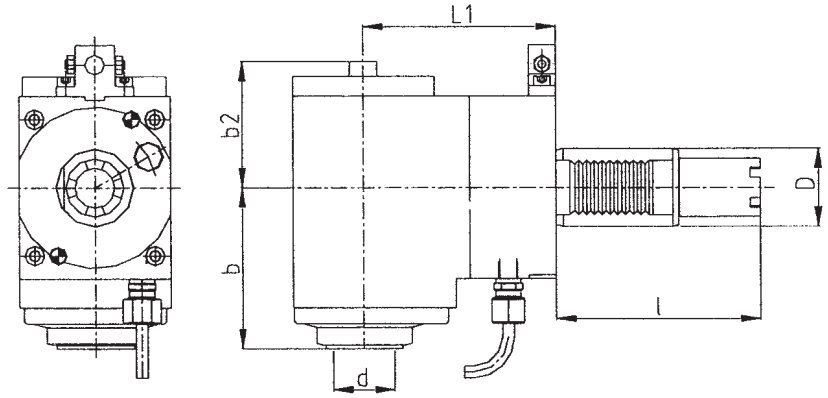

ORDER NO.	D (mm)	HAAS TURRET	VDI TURRET	1 (mm)	d	L1 (mm)	b (mm)	b2 (mm)	RPM Max	Ratio	Nm	Kg.
HE40B2090	40	–	SL-20/30	104.85 (4.128")	ECX/ER32	100	83	65	6000	1:1	50	6.8
HE40B2091	40	SL-20/30	SL-40/TL-15	117.55 (4.628")	ECX/ER32	100	83	65	6000	1:1	50	6.8
HE40B2092	40	SL-40	–	130.25 (5.128")	ECX/ER32	100	83	65	6000	1:1	50	6.9

TECHLEADER® TOOLING INC.

HAAS DIN 69880 VDI

Universal Angle Drilling & Milling Heads

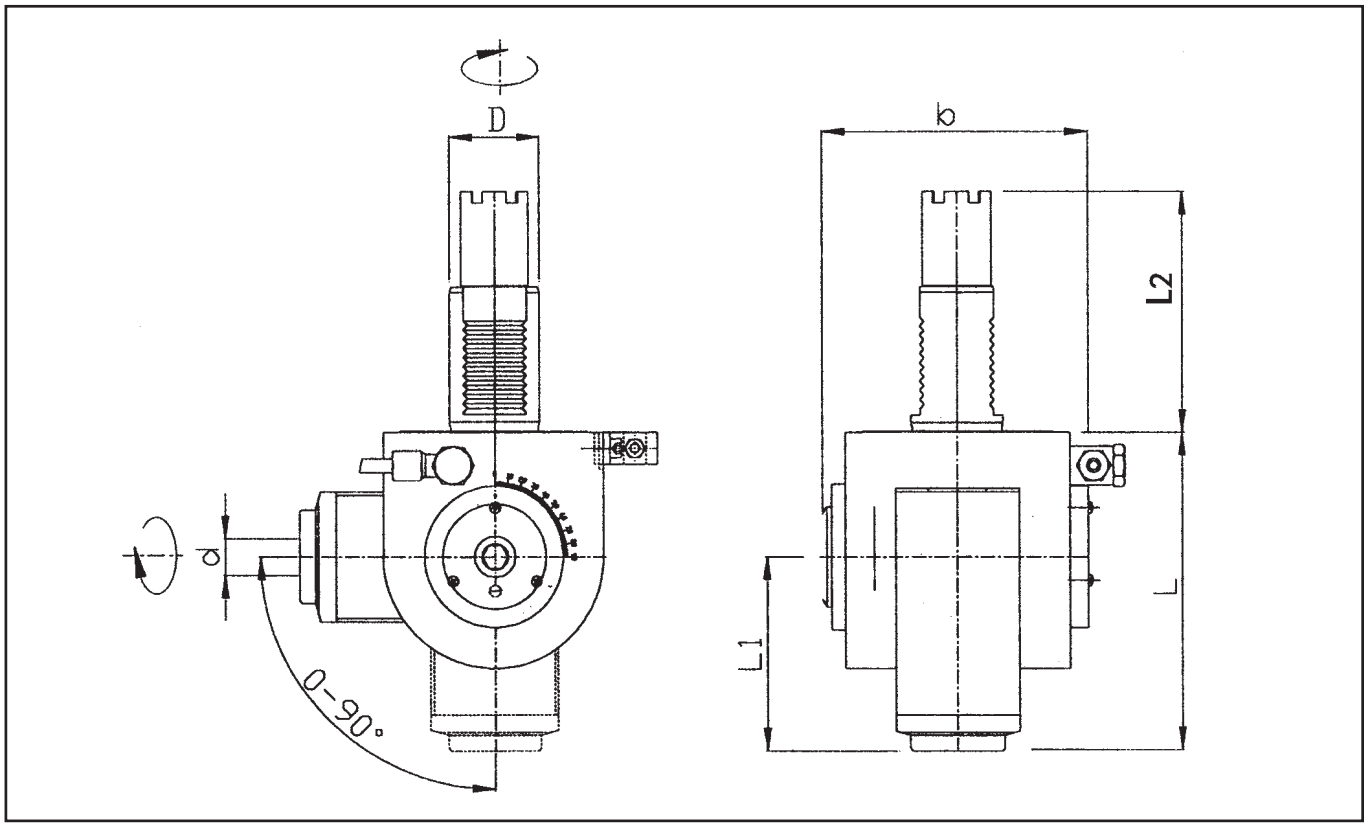

ORDER NO.	D (mm)	HAAS TURRET	VDI TURRET	L2 (mm)	d	L (mm)	L1 (mm)	b (mm)	RPM Max	Ratio	Nm	Kg.
HE40E1690	40	–	SL-20/30	104.85 (4.128")	ECX/ER25	140	85	116	6000	1:1	25	6.8
HE40E1691	40	SL-20/30	SL-40/TL-15	117.55 (4.628")	ECX/ER25	140	85	116	6000	1:1	25	6.8
HE40E1692	40	SL-40	–	130.25 (5.128")	ECX/ER25	140	85	116	6000	1:1	25	6.9

MAZAK
V-Type (Axial) Drilling & Milling Heads

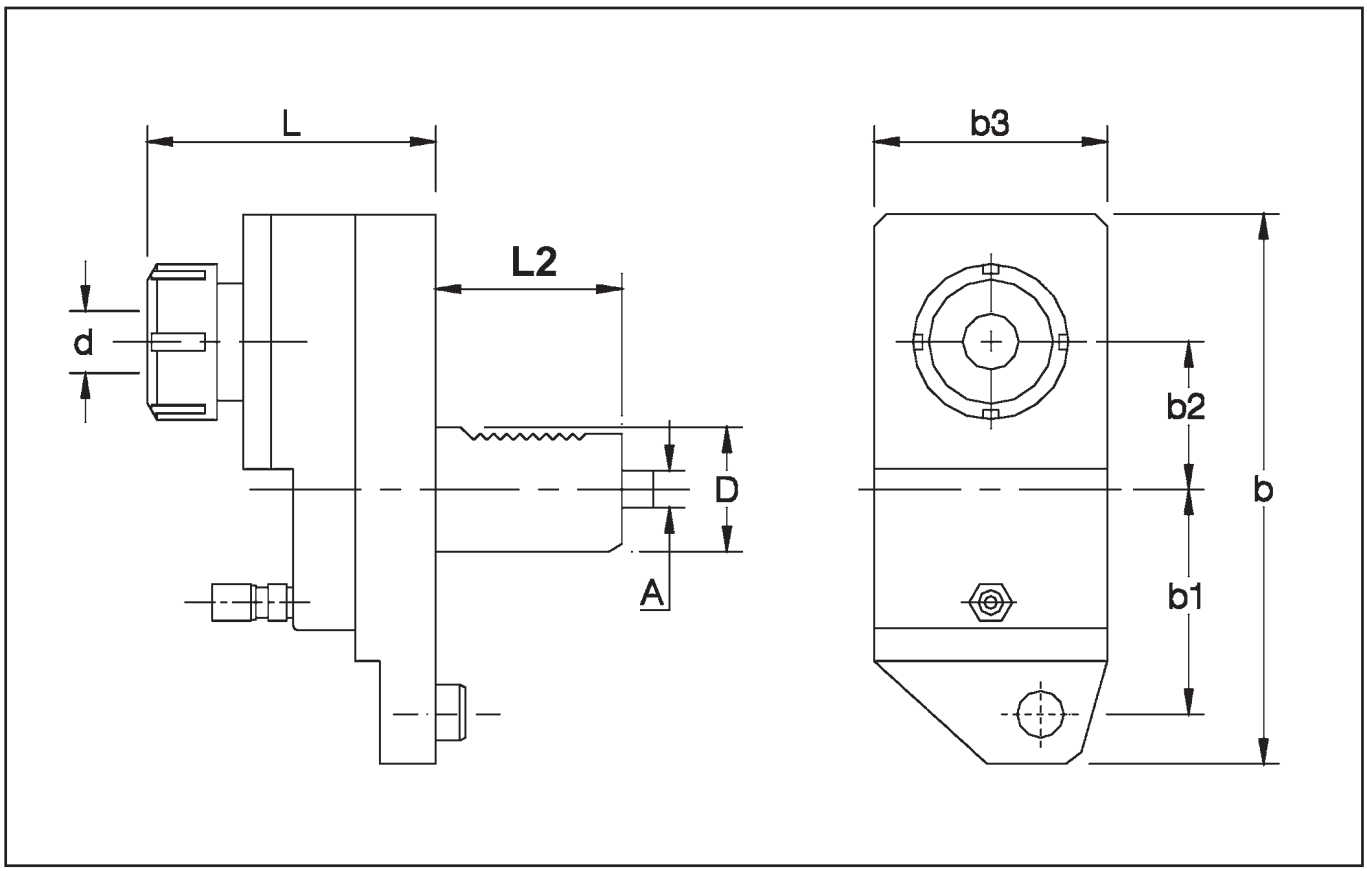

ORDER NO.	D (mm)	Machine	d	A (mm)	L2 (mm)	L (mm)	b (mm)	b1 (mm)	b2 (mm)	b3 (mm)	RPM Max	Ratio	Nm	Kg.
TE40F2045	40	SQ 10 M/C	ECX/ER32	10	60	94	174	70	50	74	6000	1:1	50	5.0
TE40F2046	40	SQ 15 MY	ECX/ER32	10	70	94	174	70	50	74	6000	1:1	50	6.0
TE40F2046	40	SQT 250 MS	ECX/ER32	10	70	94	174	70	50	74	6000	1:1	50	6.0

MAZAK
H-Type (Radial) Drilling & Milling Heads

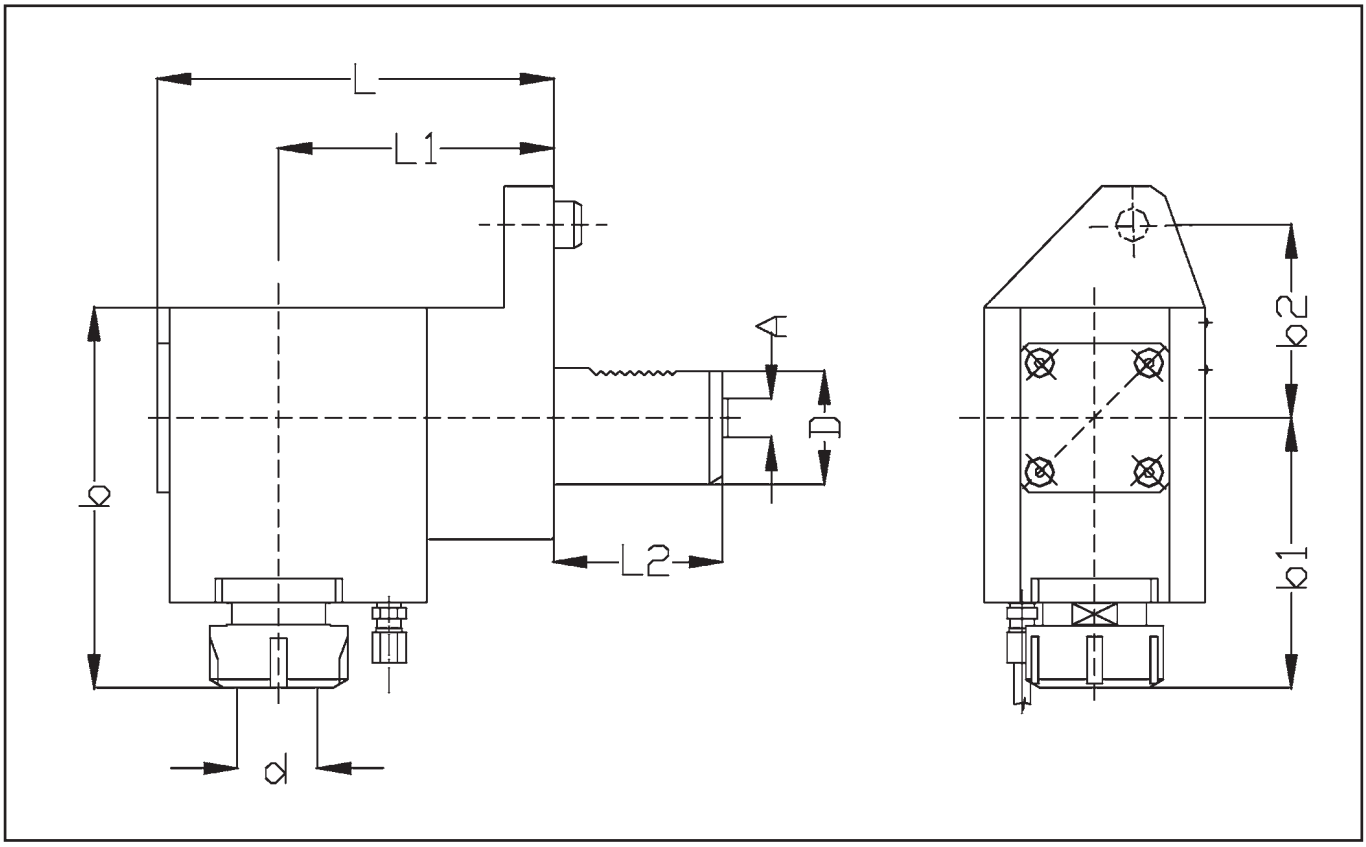

ORDER NO.	D (mm)	Machine	d	A (mm)	L2 (mm)	L (mm)	L1 (mm)	b (mm)	b1 (mm)	b2 (mm)	b3 (mm)	RPM Max	Ratio	Nm	Kg.
TE40B2045	**40**	**SQ 10 M/C**	ECX/ER32	10	60	144	100	138	98	70	74	6000	1:1	50	8.0
TE40B2046	**40**	**SQ 15 MY**	ECX/ER32	10	70	174	130	138	98	70	74	6000	1:1	50	9.0
TE40B2046	**40**	**SQT 250 MS**	ECX/ER32	10	70	174	130	138	98	70	74	6000	1:1	50	9.0

MAZAK
H-Type (Radial) Drilling & Milling Heads
(Subspindle)

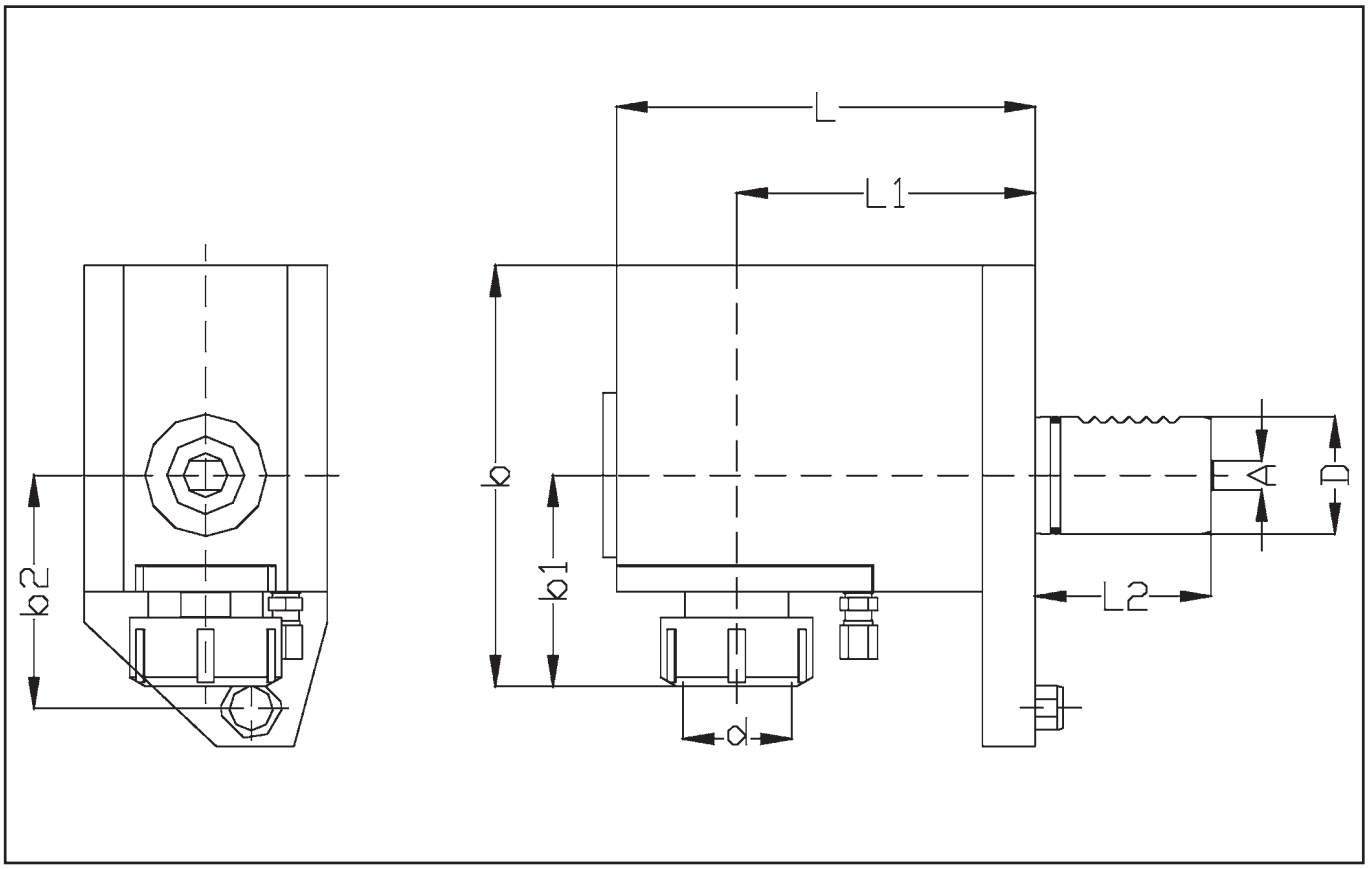

ORDER NO.	D (mm)	Machine	d	A (mm)	L2 (mm)	L (mm)	L1 (mm)	b (mm)	b1 (mm)	b2 (mm)	RPM Max	Ratio	Nm	Kg.
TE40C2045S	**40**	**SQ 10 M/C**	ECX/ER32	10	60	144	100	138	40	70	6000	1:1	50	9
TE40C2046S	**40**	**SQ 15 MY**	ECX/ER32	10	70	174	130	138	40	70	6000	1:1	50	10
TE40C2046S	**40**	**SQT 250 MS**	ECX/ER32	10	70	174	130	138	40	70	6000	1:1	50	10

MAZAK
H-Type (Radial) Double Drilling Milling Heads

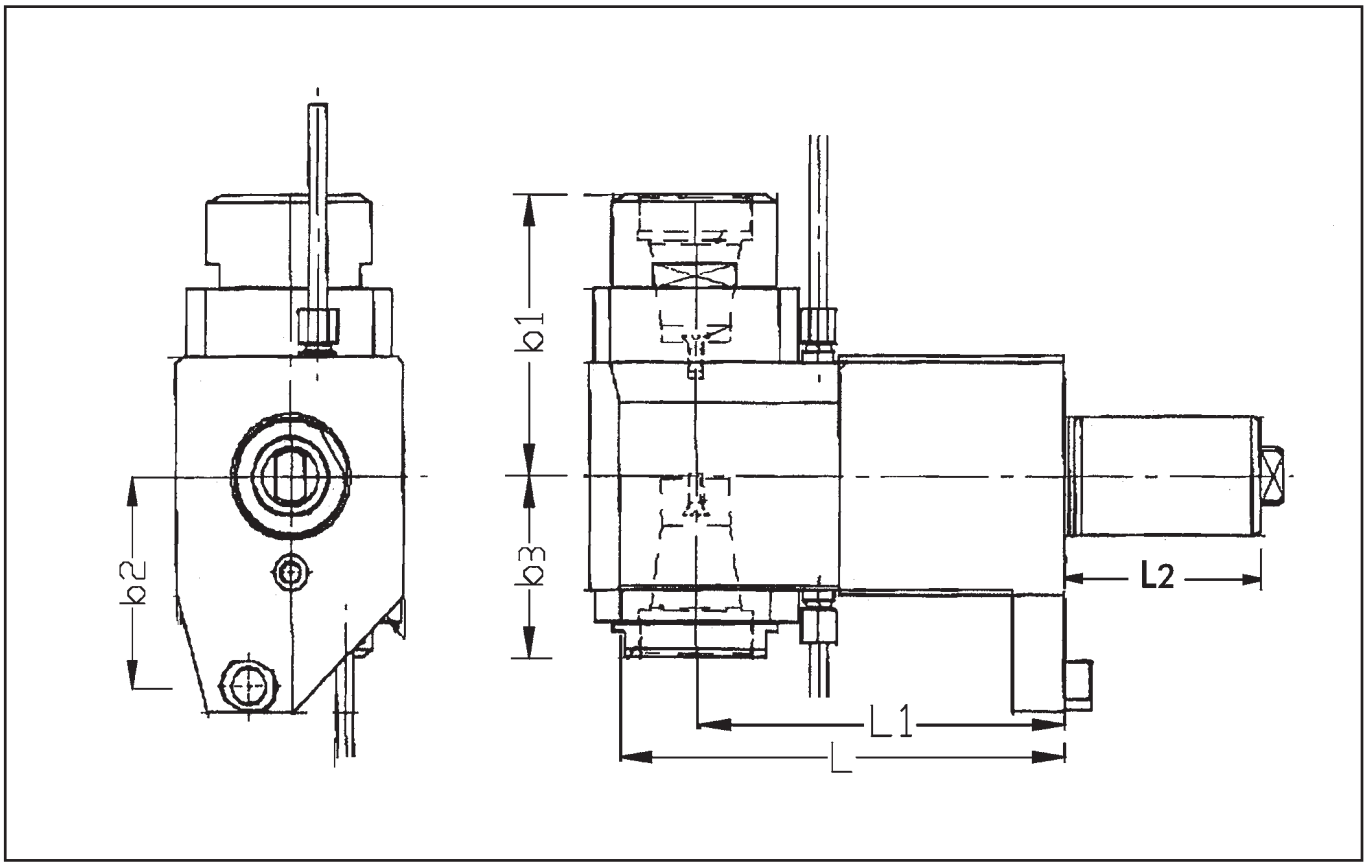

ORDER NO.	D (mm)	Machine	d	A (mm)	L2 (mm)	L (mm)	L1 (mm)	b1 (mm)	b2 (mm)	b3 (mm)	RPM Max	Ratio	Nm	Kg.
TE40L2046	40	SQ 15 MY	ECX/ER32	10	70	137	100	94.5	70	60.5	6000	1:1	50	12
TE40L2046	40	SQT 250 MS	ECX/ER32	10	70	137	100	94.5	70	60.5	6000	1:1	50	12

MAZAK
Universal Angle Drilling-Milling Heads

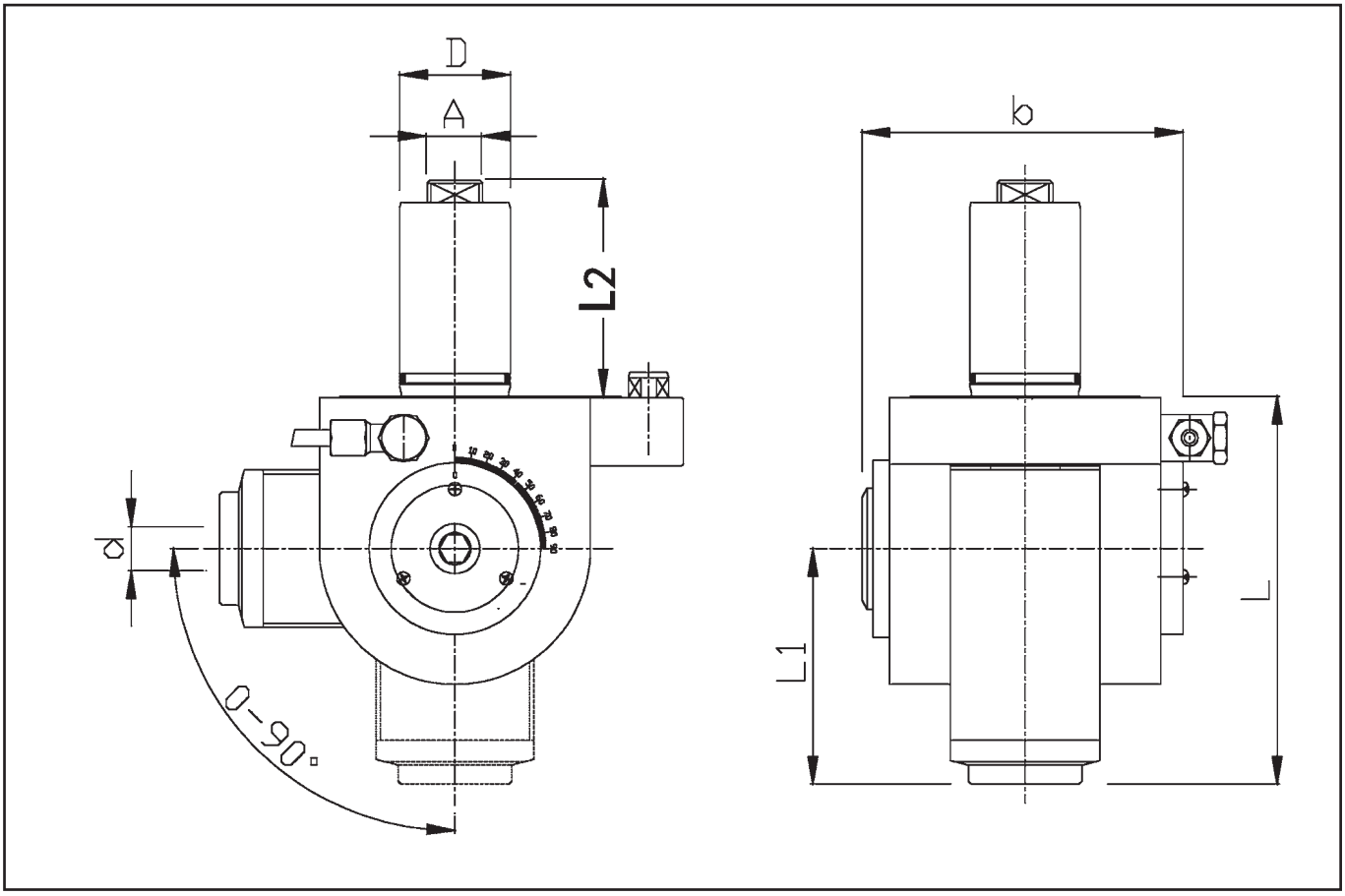

ORDER NO.	D (mm)	Machine	d	A (mm)	L2 (mm)	L (mm)	L1 (mm)	b (mm)	RPM Max	Ratio	Nm	Kg.
HE40E1645	**40**	**SQ 10 M/C**	ECX/ER25	10	60	140	85	116	6000	1:1	25	6.9
HE40E1646	**40**	**SQ 15 MY**	ECX/ER25	10	70	140	85	116	6000	1:1	25	6.9
HE40E1646	**40**	**SQT 250 MS**	ECX/ER25	10	70	140	85	116	6000	1:1	25	6.9

MAZAK

V-Type (Axial) Drilling & Milling Heads

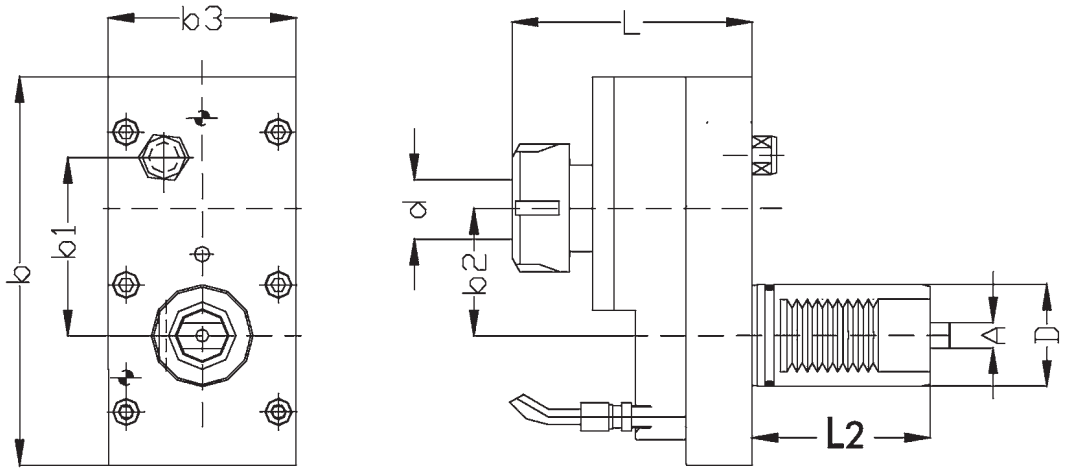

ORDER NO.	D (mm)	Machine	d	A (mm)	L2 (mm)	L (mm)	b (mm)	b1 (mm)	b2 (mm)	b3 (mm)	RPM Max	Ratio	Nm	Kg.
TE40F2047	40	MULTIPLEX 6200	ECX/ER32	10	70	95	153	98	50	74	6000	1:1	50	6

H-Type (Radial) Drilling & Milling Heads

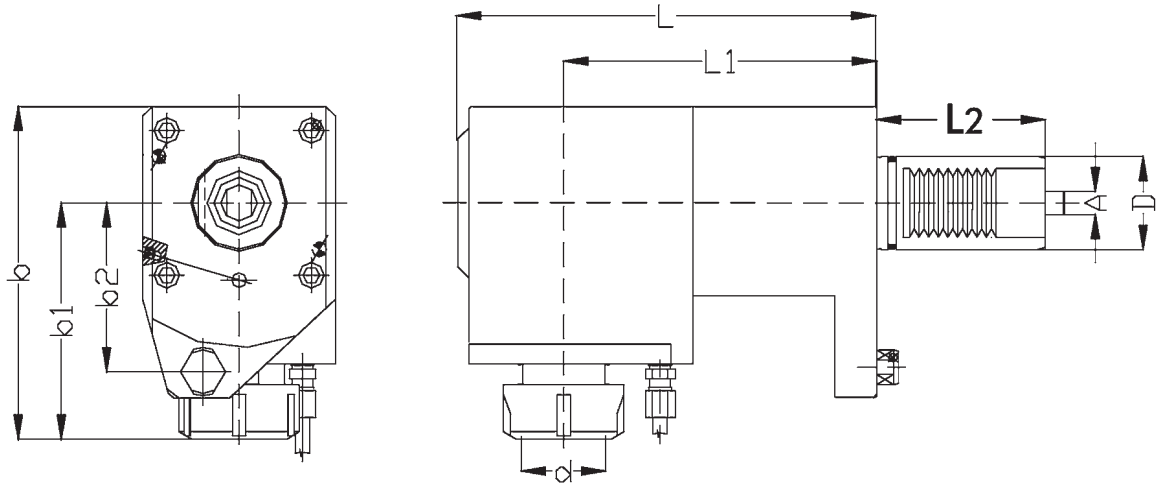

ORDER NO.	D (mm)	Machine	d	A (mm)	L2 (mm)	L (mm)	L1 (mm)	b (mm)	b1 (mm)	b2 (mm)	RPM Max	Ratio	Nm	Kg.
TE40B2047	40	MULTIPLEX 6200	ECX/ER32	10	70	174	130	138	98	70	6000	1:1	50	9

MAZAK
Universal Angle Drilling-Milling Heads

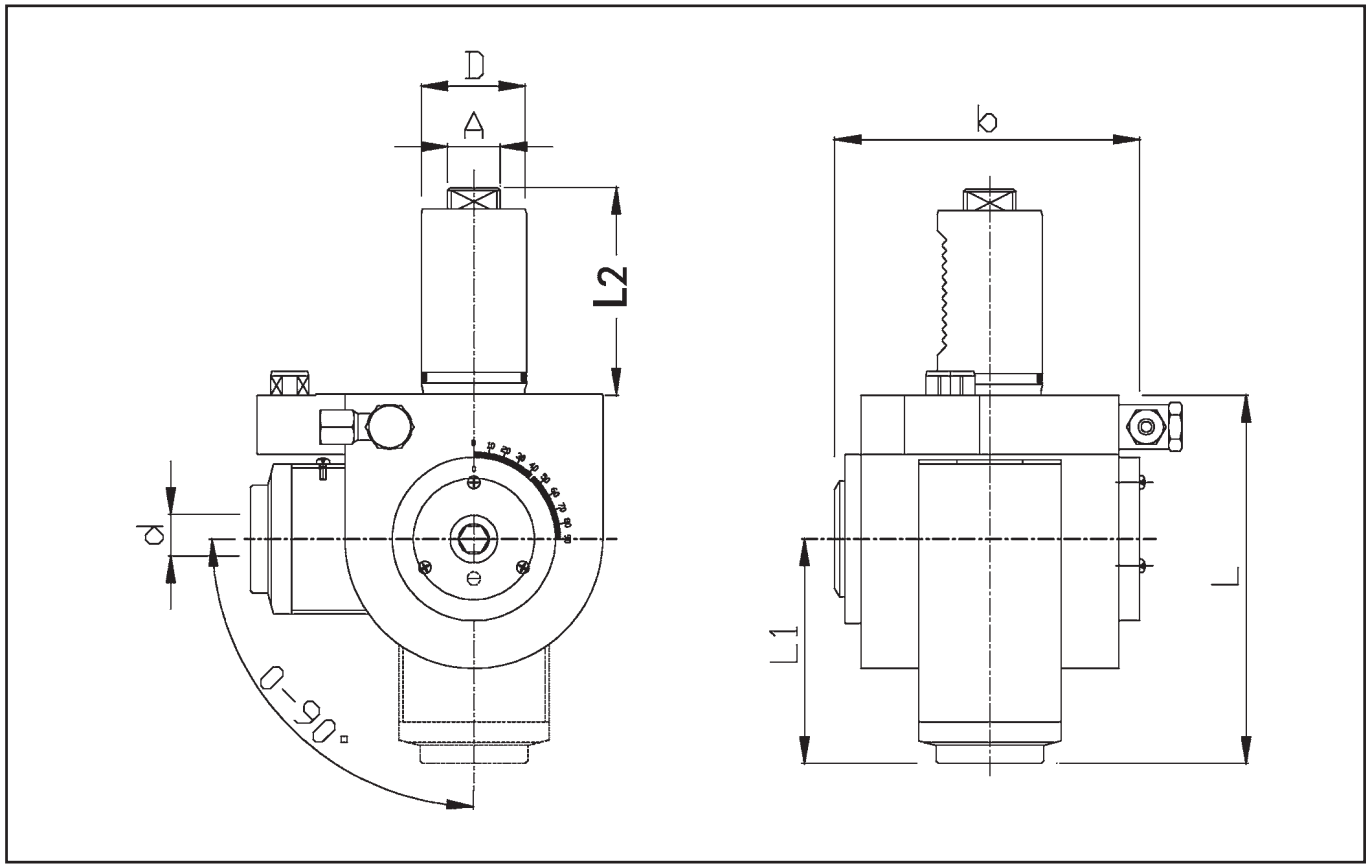

ORDER NO.	D (mm)	Machine	d	A (mm)	L2 (mm)	L (mm)	L1 (mm)	b (mm)	RPM Max	Ratio	Nm	Kg.
HE40E1647	**40**	**MULTIPLEX 6200**	ECX/ER25	10	70	140	85	116	6000	1:1	25	6.9

TECHLEADER® TOOLING INC.

MORI SEIKI SL 150-200-250-300

Axial Drilling And Milling Heads

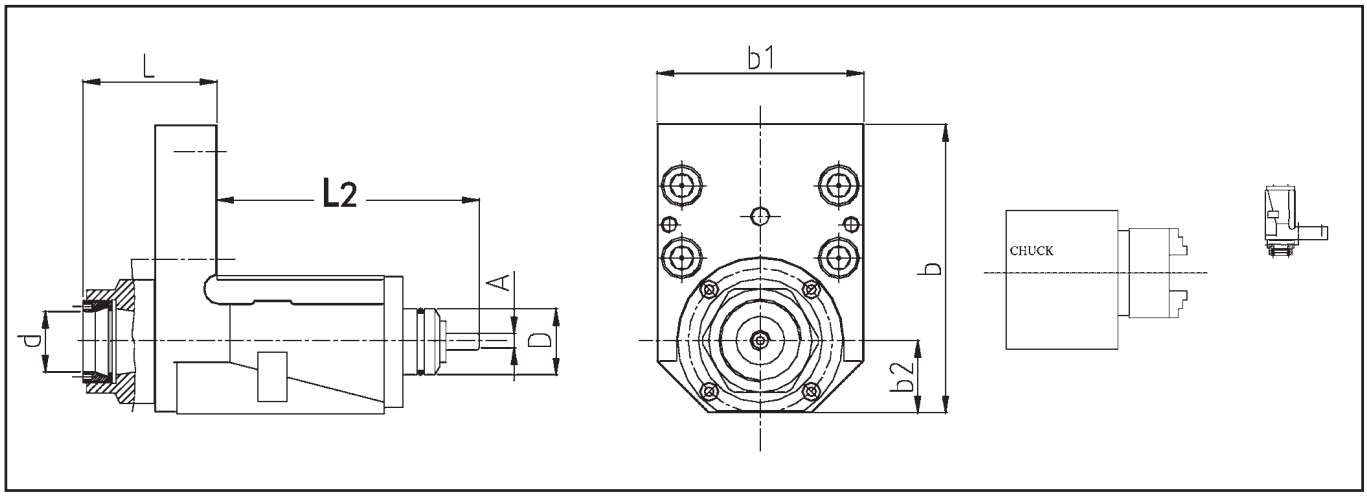

ORDER NO.	D (mm)	d	A (mm)	L2 (mm)	L (mm)	b (mm)	b1 (mm)	b2 (mm)	RPM Max	Ratio	Nm	Kg.
HE32MA20	32	ECX/ER32	7.9	127	64.5	140	100	35	6000	1:1	50	5.5

Radial Drilling And Milling Heads

SL 150-200-250-300

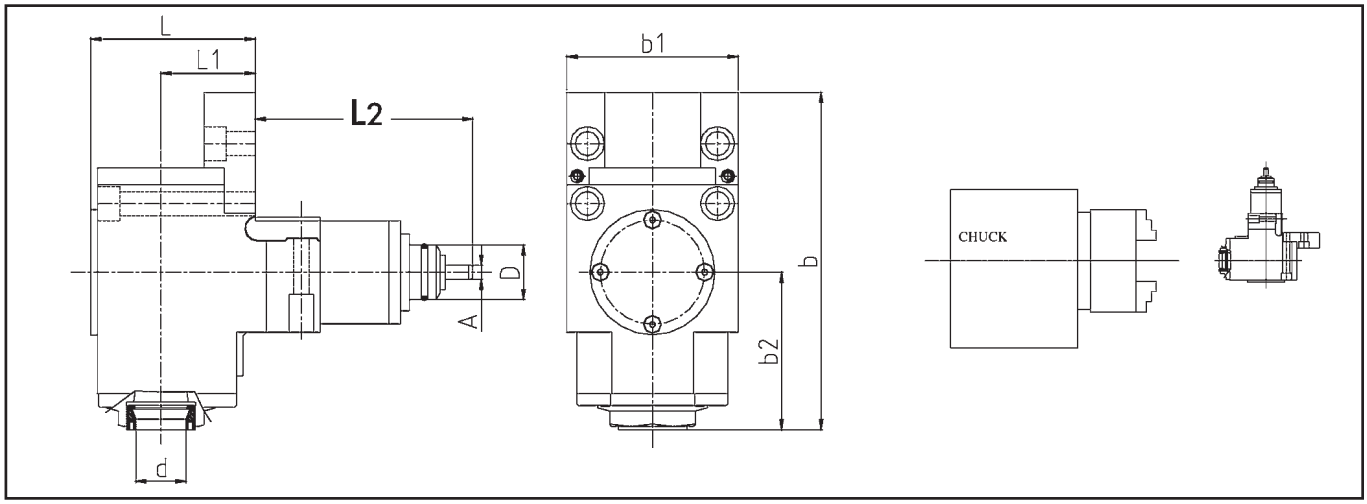

ORDER NO.	D (mm)	d	A (mm)	L2 (mm)	L (mm)	L1 (mm)	b (mm)	b1 (mm)	b2 (mm)	RPM Max	Ratio	Nm	Kg.
HE32MB20	32	ECX/ER32	7.9	127	96	55	197	100	92	6000	1:1	50	10

MORI SEIKI SL 150-200-250-300

Radial Drilling And Milling Heads

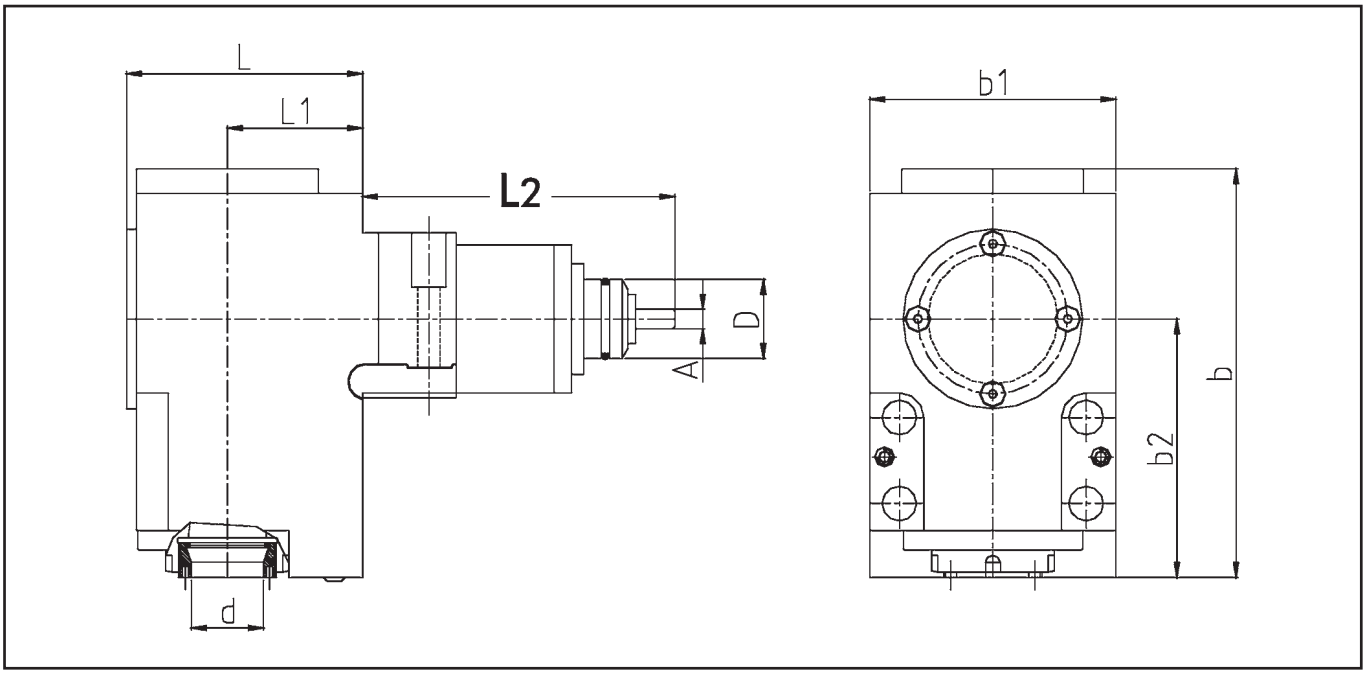

ORDER NO.	D (mm)	d	A (mm)	L2 (mm)	L (mm)	L1 (mm)	b (mm)	b1 (mm)	b2 (mm)	RPM Max	Ratio	Nm	Kg.
HE32MB20S	32	ECX/ER32	7.9	127	96	55	166	100	105	6000	1:1	50	10

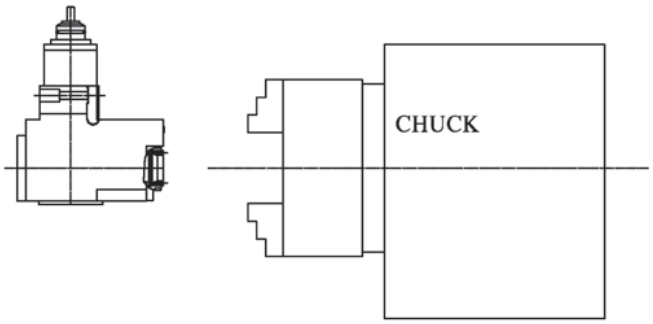

MORI SEIKI SL 150-200-250-300

Radial Double Right Angle Drilling & Milling Heads

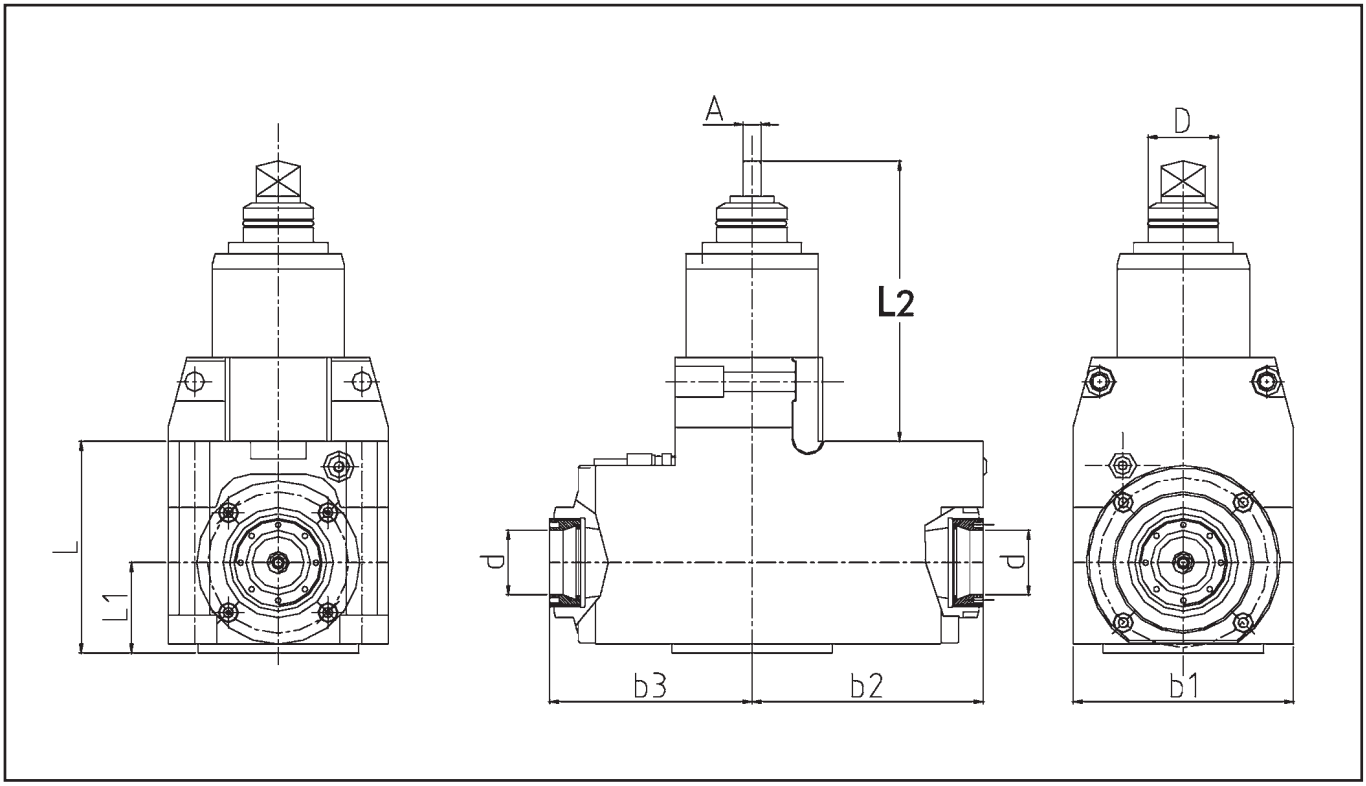

ORDER NO.	D (mm)	d	A (mm)	L2 (mm)	L (mm)	L1 (mm)	b1 (mm)	b2 (mm)	b3 (mm)	RPM Max	Ratio	Nm	Kg.
HE32ML20	32	ECX/ER32	7.9	127	96	55	100	105	92	6000	1:1	50	14

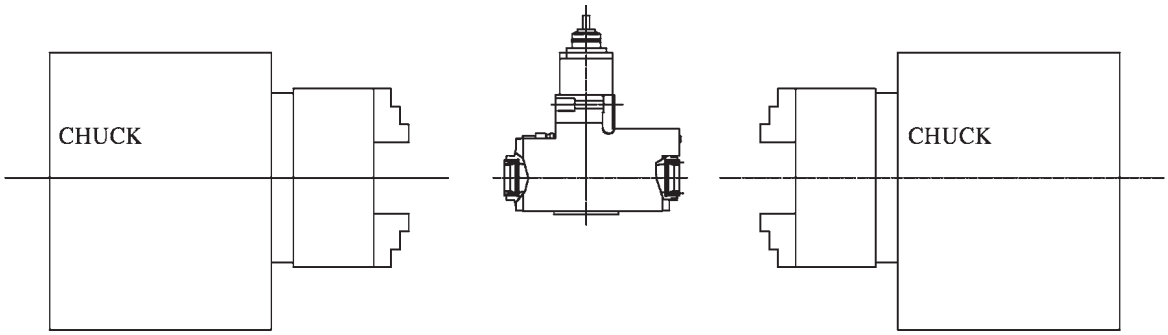

TECHLEADER® TOOLING INC.

MORI SEIKI SL 150-200-250-300

Universal Angle Drilling And Milling Heads

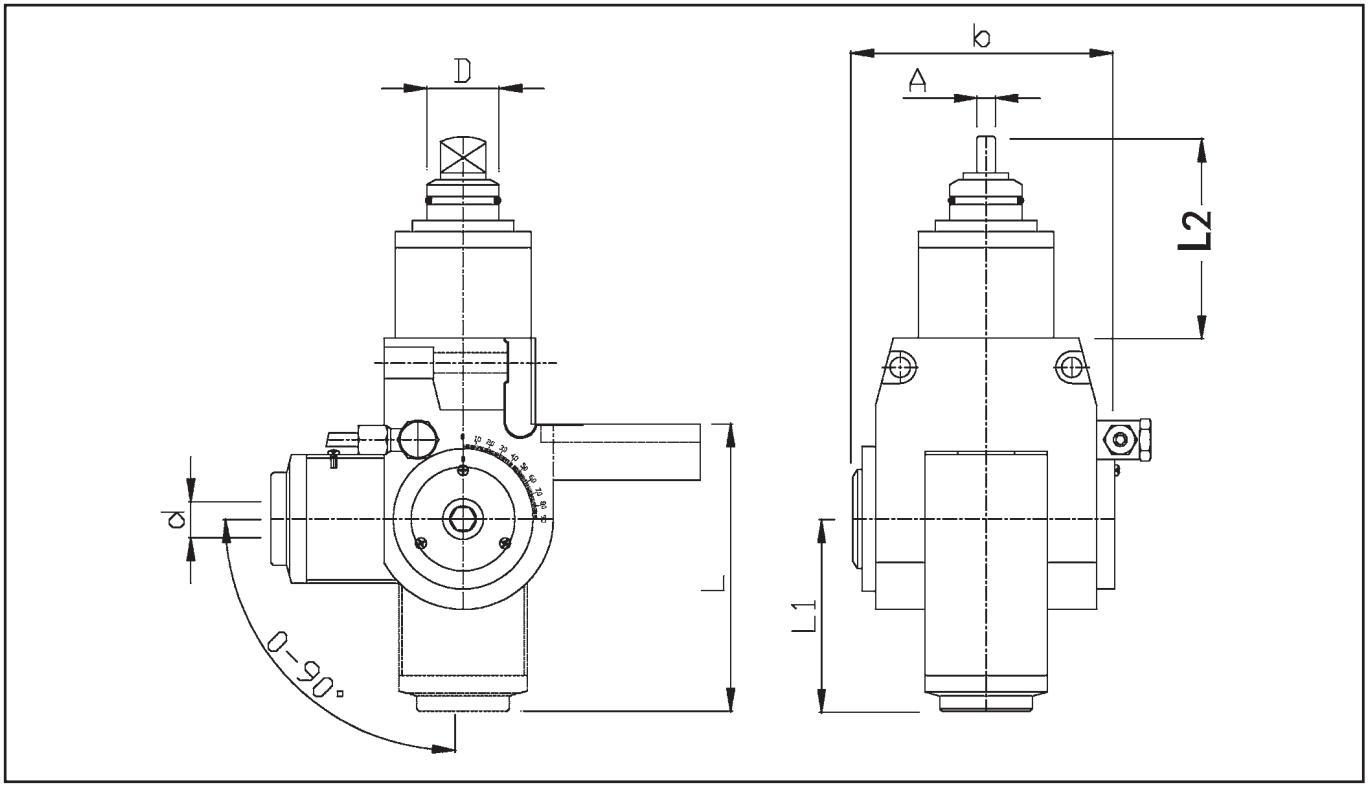

ORDER NO.	D (mm)	d	A (mm)	L2 (mm)	L (mm)	L1 (mm)	b (mm)	RPM Max	Ratio	Nm	Kg.
HE32ME16	**32**	ECX/ER25	7.9	127	130	85	116	6000	1:1	25	7.5

TECHLEADER® TOOLING INC.

MORI SEIKI NL SERIES

Axial Drilling And Milling Heads

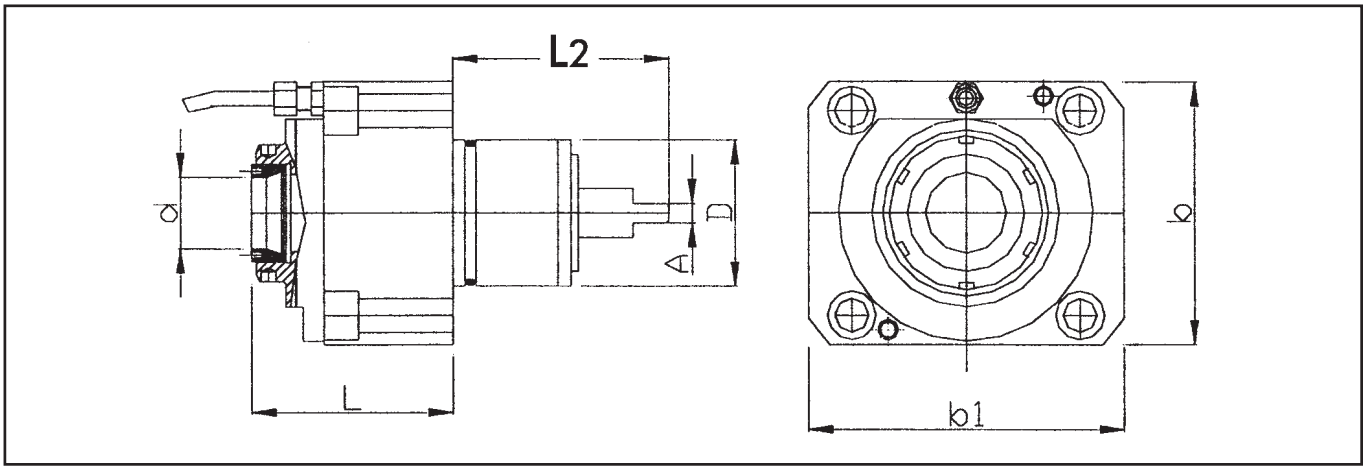

ORDER NO.	D (mm)	d	A (mm)	L2 (mm)	L (mm)	b (mm)	b1 (mm)	RPM Max	Ratio	Nm	Kg.
HE60MA20	60	ECX/ER32	7.9	91	82	130	108	6000	1:1	50	7.50
HE60MA26	60	ECX/ER40	7.9	91	97	130	108	6000	1:1	50	7.65

Axial Drilling And Milling Heads

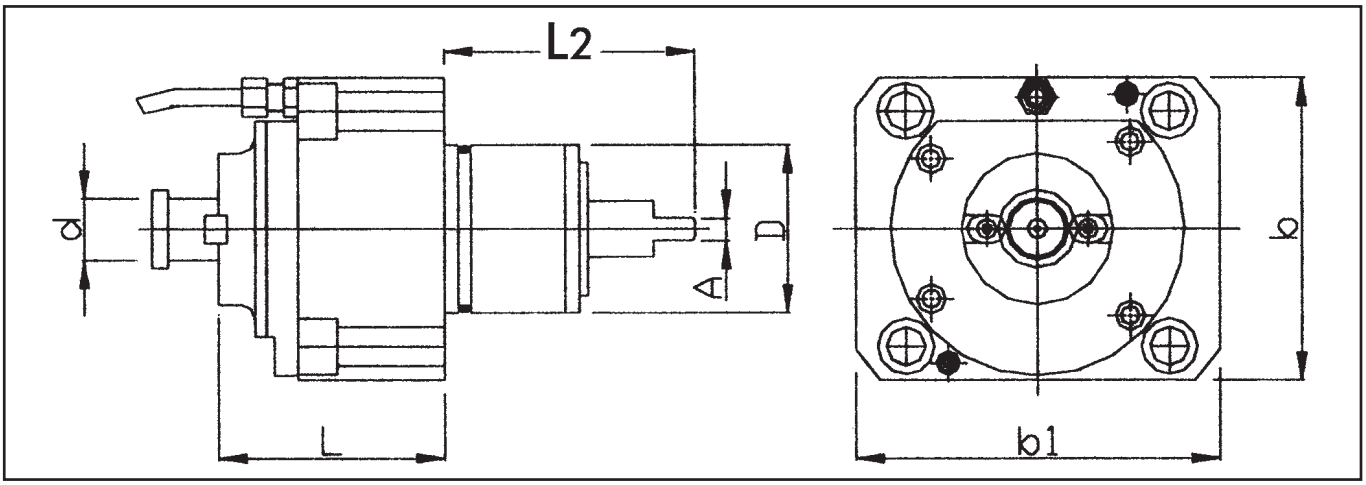

ORDER NO.	D (mm)	dh6	A (mm)	L2 (mm)	L (mm)	b (mm)	b1 (mm)	RPM Max	Ratio	Nm	Kg.
TF60MA22	60	Ø22	7.9	91	82	108	130	6000	1:1	50	7.8

MORI SEIKI NL SERIES

Radial Drilling And Milling Heads

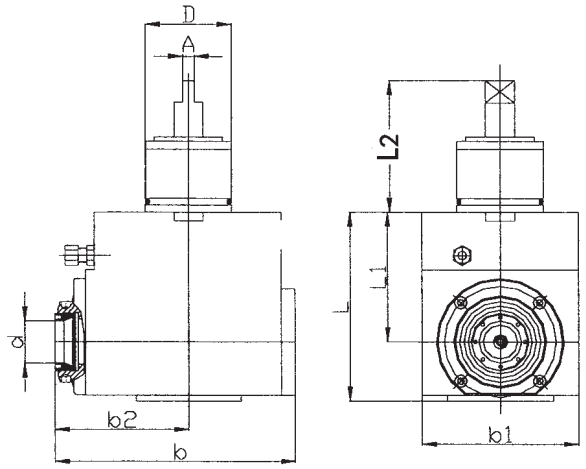

ORDER NO.	D (mm)	d	A (mm)	L2 (mm)	L (mm)	L1 (mm)	b (mm	b1 (mm	b1 (mm)	RPM Max	Ratio	Nm	Kg.
HE60MB20	60	ECX/ER32	7.9	91	131	90	167	108	92	6000	1:1	50	14.00
HE60MB26	60	ECX/ER40	7.9	91	131	90	182	108	107	6000	1:1	50	14.15

Radial Double Drilling And Milling Heads

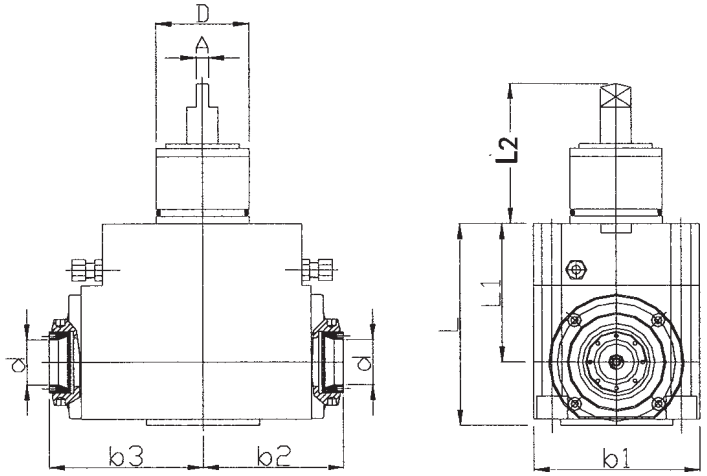

ORDER NO.	D (mm)	d	A (mm)	L2 (mm)	L (mm)	L1 (mm)	b1 (mm)	b2 (mm	b3 (mm	RPM Max	Ratio	Nm	Kg.
HE60ML20	60	ECX/ER32	7.9	91	131	90	108	92	100	6000	1:1	50	15.00
HE60ML26	60	ECX/ER40	7.9	91	97	90	108	107	115	6000	1:1	50	15.15

TECHLEADER® TOOLING INC.

MORI SEIKI NL SERIES
Universal Angle Drilling & Milling Heads

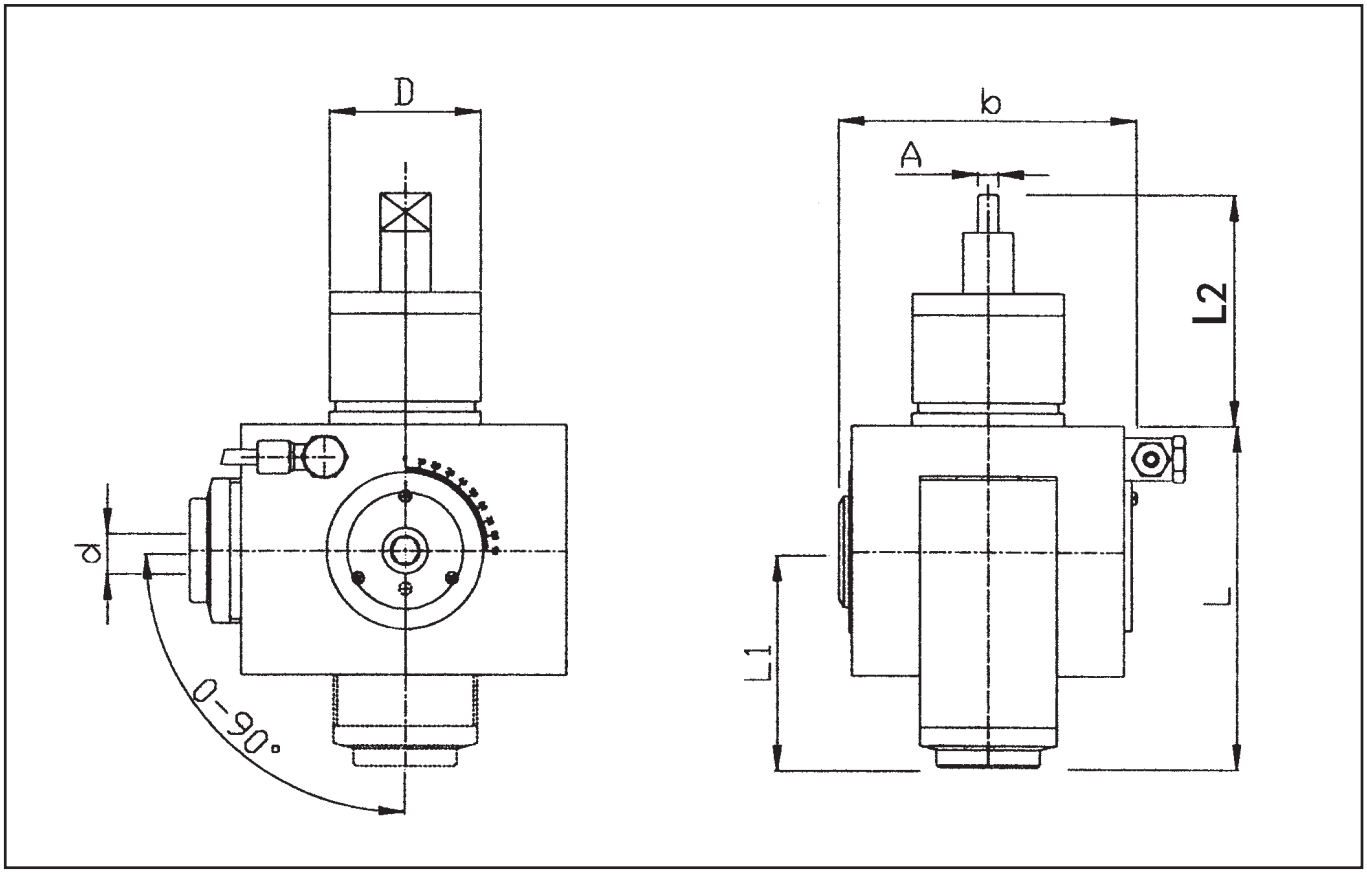

ORDER NO.	D (mm)	d	A (mm)	L2 (mm)	L (mm)	L1 (mm)	b (mm)	RPM Max	Ratio	Nm	Kg.
HE60ME16	**60**	ECX/ER25	7.9	91	140	85	116	6000	1:1	25	9.0

NAKAMURA

Axial Drilling And Milling Heads

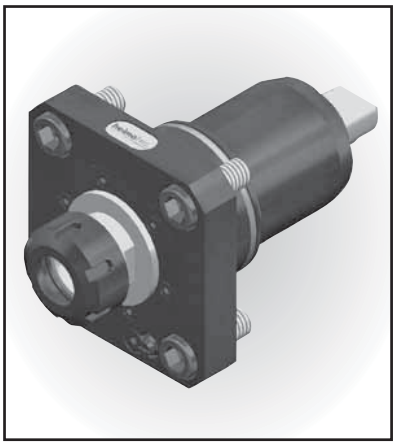

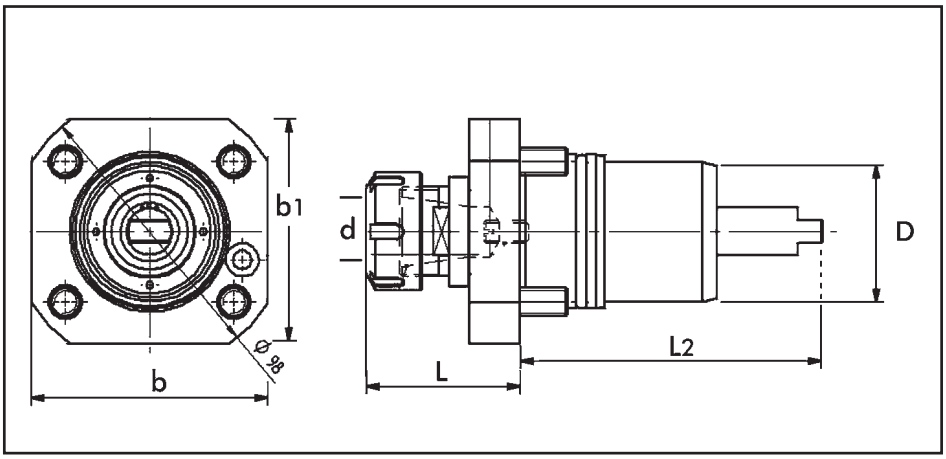

ORDER NO.	MODEL	D (mm)	d	L (mm)	b (mm)	b1 (mm)	RPM Max	Ratio	Nm
801055003	TW10, WTS150, SC150, SC250	55	ECX/ER25	55	80	84	6000	1:1	25
801066003	TW20, SC300	65	ECX/ER32	56	97	97	6000	1:1	50
801066011	TW30, SC450	75	ECX/ER32	73	100	115	4000	1:1	50

Radial Drilling And Milling Heads

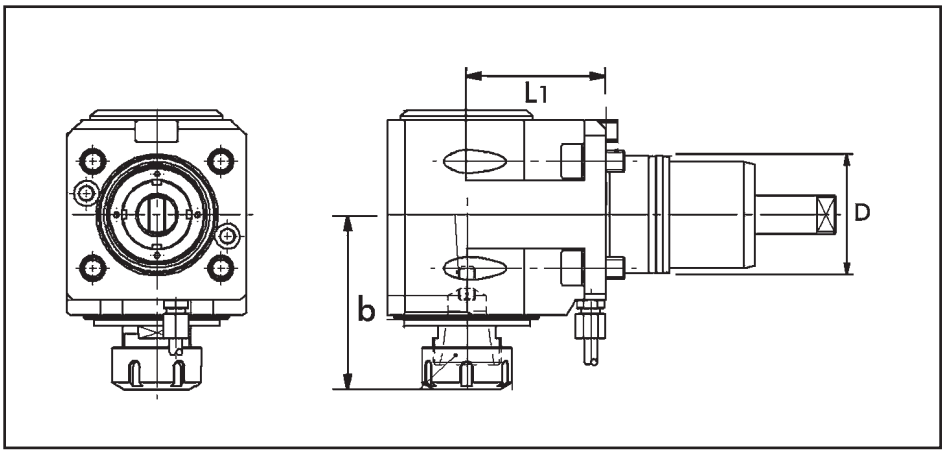

ORDER NO.	MODEL	D (mm)	d	L1 (mm)	b (mm)	RPM Max	Nm
803055037	TW10, WTS150, SC150, SC250	55	ECX/ER25	65	82	6000	50
803066002	TW20, SC300	65	ECX/ER32	65	83	6000	50
803066005	TW30, SC450	75	ECX/ER32	90	87	4000	50

TECHLEADER® TOOLING INC.

NAKAMURA
Radial Double Drilling & Milling Heads

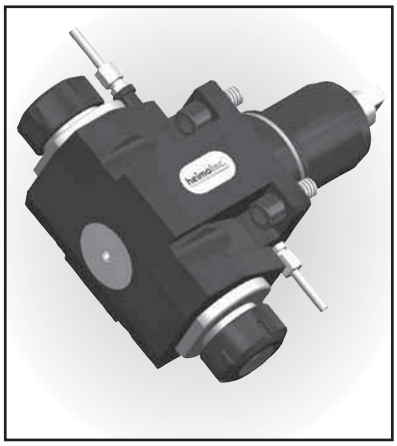

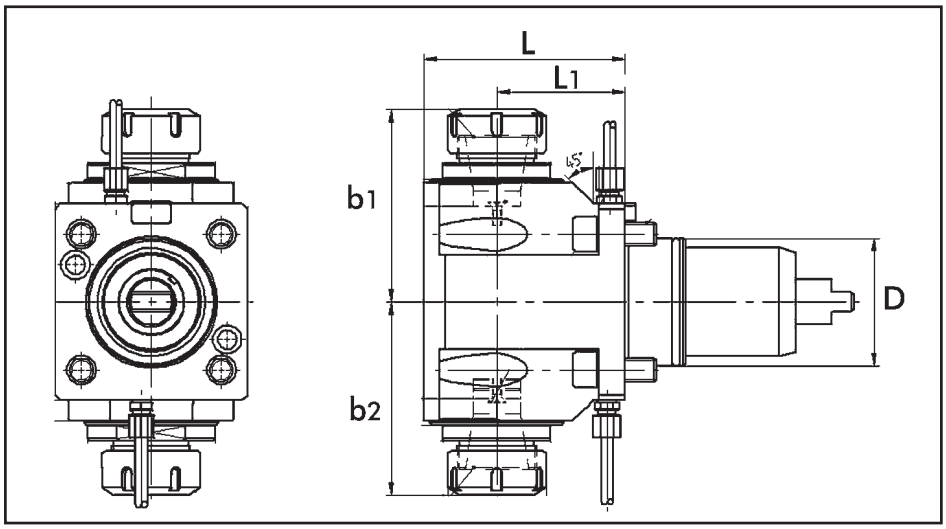

ORDER NO.	MODEL	D (mm)	d	L (mm)	L2 (mm)	b (mm)	b1 (mm)	RPM Max	Ratio	Nm
803955003	TW10, WTS150, SC150, SC250	55	ECX/ER25	80	55	77	77	6000	1:1	25
803966008	TW20, SC300	65	ECX/ER32	102	65	98	98	6000	1:1	50
803966012	TW30, SC450	75	ECX/ER32	127	90	98	98	6000	1:1	50

Universal Angle Drilling & Milling Heads

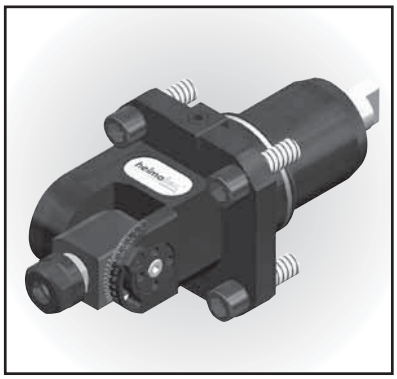

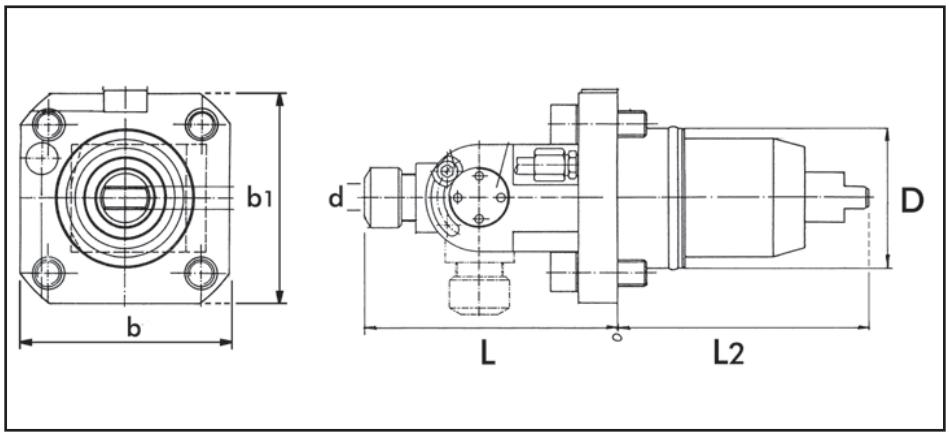

ORDER NO.	MODEL	L1 (mm)	d	L (mm)	L2 (mm)	b (mm)	b1 (mm)	RPM Max	Nm
804054002	TW10, WTS150, SC150, SC250	105	ECX/ER16	108	54	80	84	5000	50
804064000	TW20, SC300	116.3	ECX/ER16	116.3	54	97	97	4000	50
804065001	TW30, SC450	143.5	ECX/ER25	141.5	67	100	102	4000	50

TECHLEADER® TOOLING INC.

OKUMA

Type I & Type II Couplings

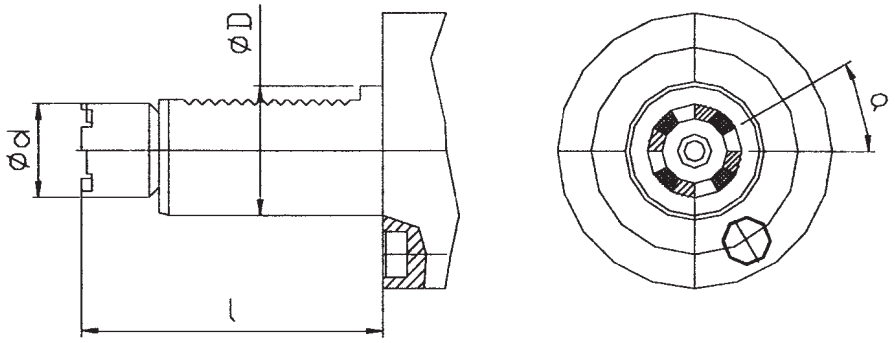

ØD (mm)		50		
1 (mm)		105		
Ød (mm)		42		
n (mm)		12		
a°		30		
Machine		LB3511M		
Code		...39		

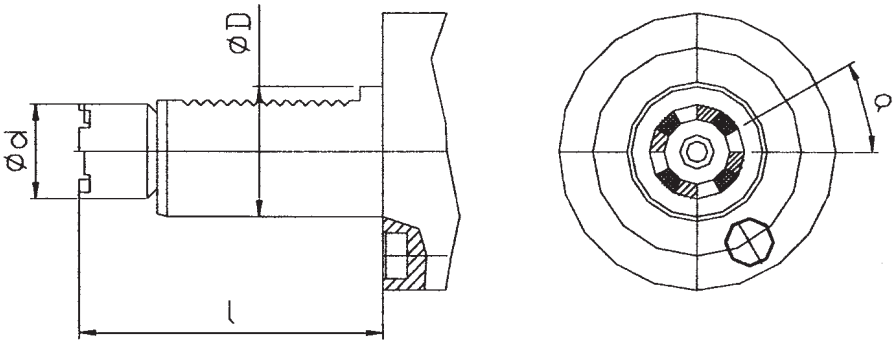

ØD (mm)	30	40	40	50
1 (mm)	69	93	101	105
Ød (mm)	24	29	35	42
n (mm)	8	8	8	8
a°	60	60	60	60
	30	30	30	30
Machine	LB10M LB1011M LR10M LB200M	LB15M LB1511M LB1511MY LU15M LB300M LB300MY LU300M L370M LVT300M LVT400M	LB25M LU25M LB251M LU400 L470M	LU35M LB45 LU45
Code	...35	...36	...37	...38

TECHLEADER® TOOLING INC.

OKUMA
Axial Drilling And Milling Heads

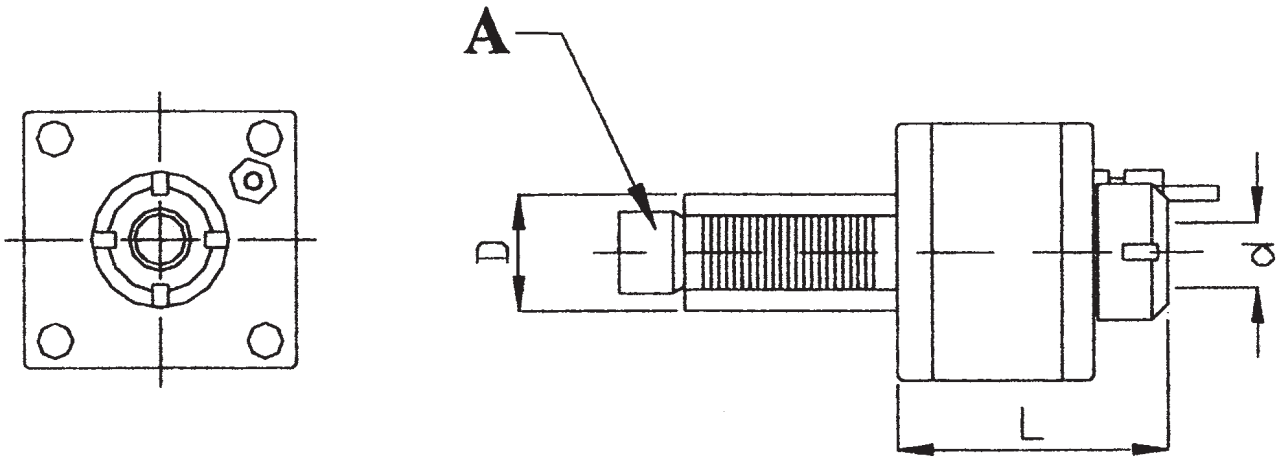

ORDER NO.	D (mm)	d	L (mm)	RPM Max	Ratio	Nm	Kg.
TE30A1335	**30**	ECX/ER20	100	6000	1:1	25	2.8
TE40A2036	**40**	ECX/ER32	110	6000	1:1	60	4.0
TE40A2037	**40**	ECX/ER32	110	6000	1:1	60	4.0

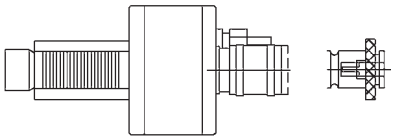

TAPPING HEAD (BLILZ)

Drive A** / D (mm)	TYPE II	TYPE I
30	–	...35 LB10M-LB1011M LR10M-LB200M
40	–	...36 LB15M-LB151M LB1511MY-LU15M
40	–	...37
50	...39 LB3511M	...38

TECHLEADER® TOOLING INC.

OKUMA
Radial Drilling And Milling Heads

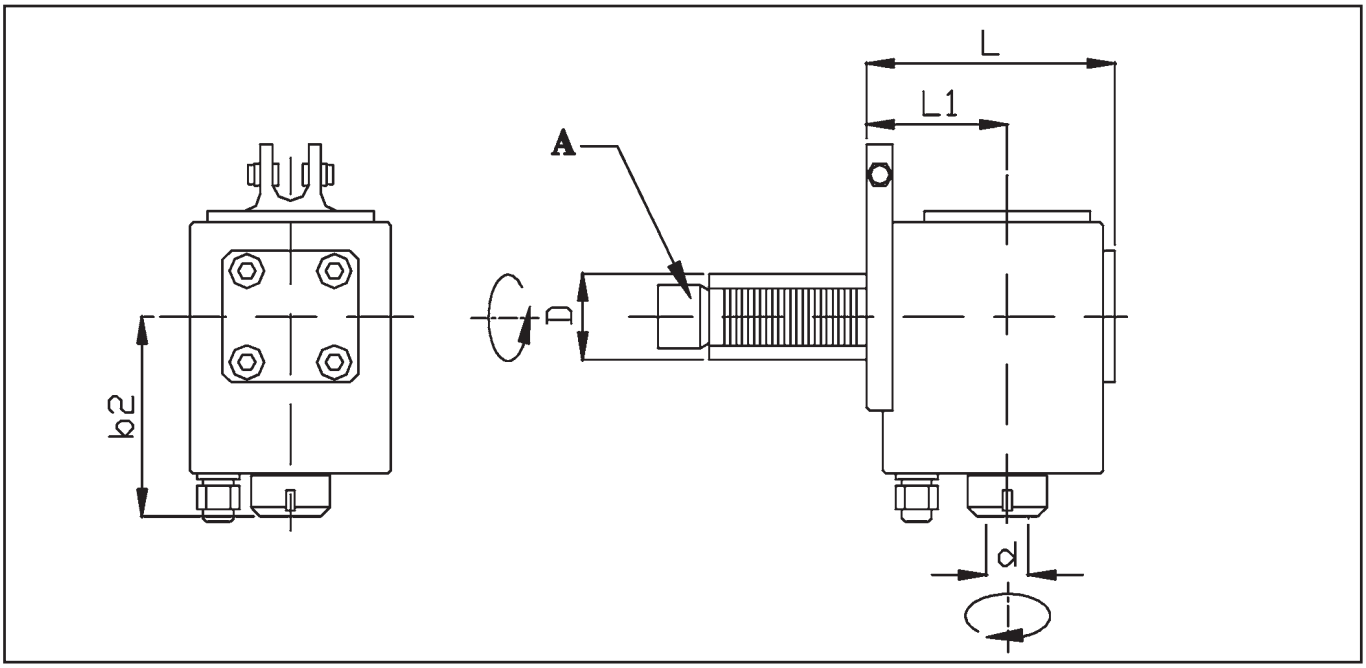

ORDER NO.	D (mm)	d	L (mm)	L1 (mm)	b2 (mm)	RPM Max	Ratio	Nm	Kg.
TE30B1335	**30**	ECX/ER20	102	53	90	6000	1:1	25	3.8
TE40B2036	**40**	ECX/ER32	109	64	98	6000	1:1	50	6.0
TE40B2037	**40**	ECX/ER32	109	64	98	6000	1:1	50	6.0

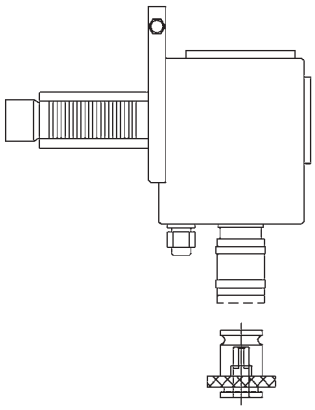

TAPPING HEAD (BLILZ)

Drive A** / D (mm)	TYPE II	TYPE I
30	–	...35 LB10M-LB1011M LR10M-LB200M
40	–	...36 LB15M-LB1511M LB1511MY-LU15M LB300M-LB300MY LU300M-L370M LVT300M-LVT400M
40	–	...37 LB25M-LU25M LB2511M-LU400 L470M
50	...39 LB3511M	...38 LU35M-LB45 LU45

TECHLEADER® TOOLING INC.

OKUMA
Radial (Short) Drilling And Milling Heads

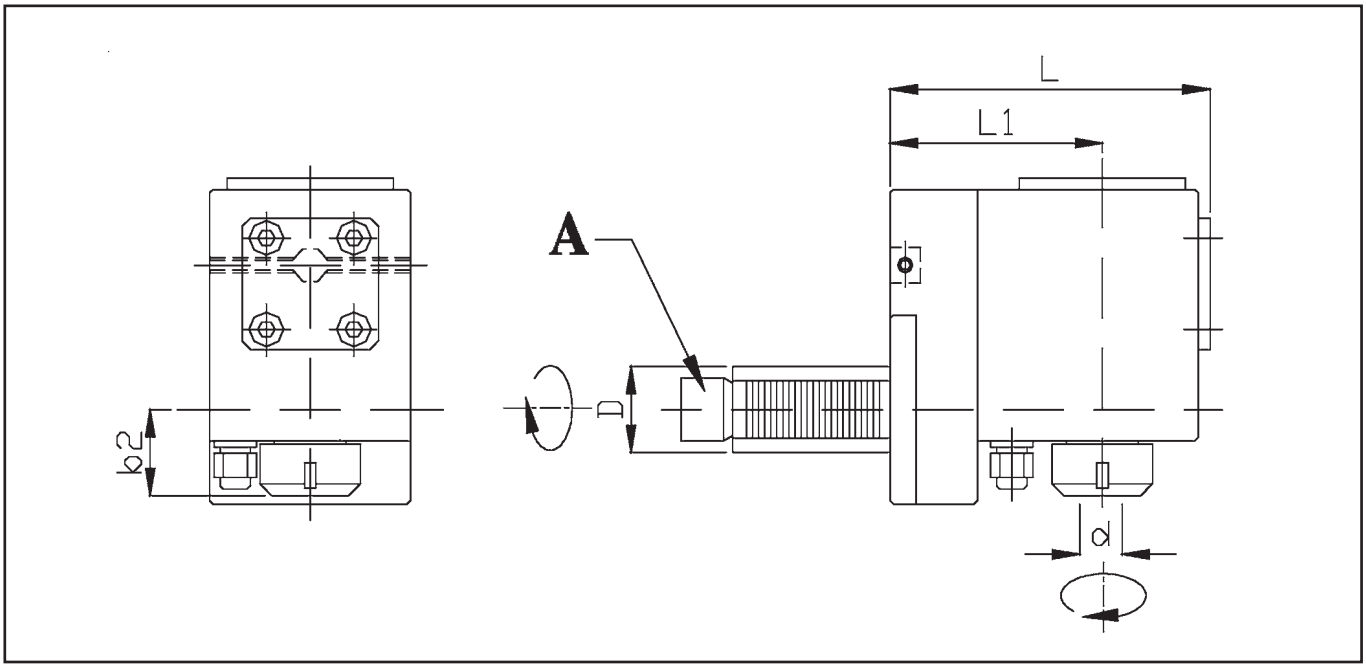

ORDER NO.	D (mm)	d	L (mm)	L1 (mm)	b2 (mm)	RPM Max	Ratio	Nm	Kg.
TE30C1335	**30**	ECX/ER20	106	70	48.5	6000	1:1	25	5.0
TE40C2036	**40**	ECX/ER32	130	86	40	6000	1:1	50	6.5
TE40C2037	**40**	ECX/ER32	130	86	40	6000	1:1	50	6.5

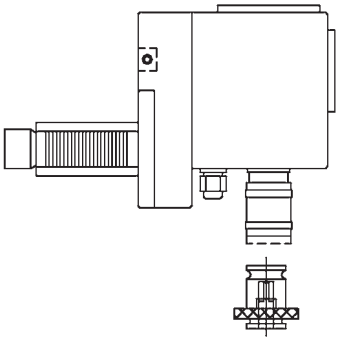

TAPPING HEAD (BLILZ)

Drive A** / D (mm)	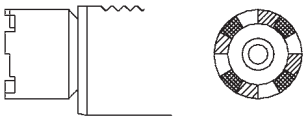 TYPE II	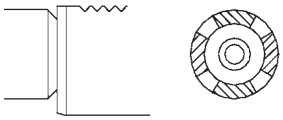 TYPE I
30	–	...35 LB10M-LB1011M LR10M-LB200M
40	–	...36 LB15M-LB1511M LB1511MY-LU15M LB300M-LB300MY LU300M-L370M LVT300M-LVT400M
40	–	...37 LB25M-LU25M LB2511M-LU400 L470M
50	...39 LB3511M	...38 LU35M-LB45 LU45

TECHLEADER® TOOLING INC.

OKUMA
Universal Angle Drilling-Milling Heads

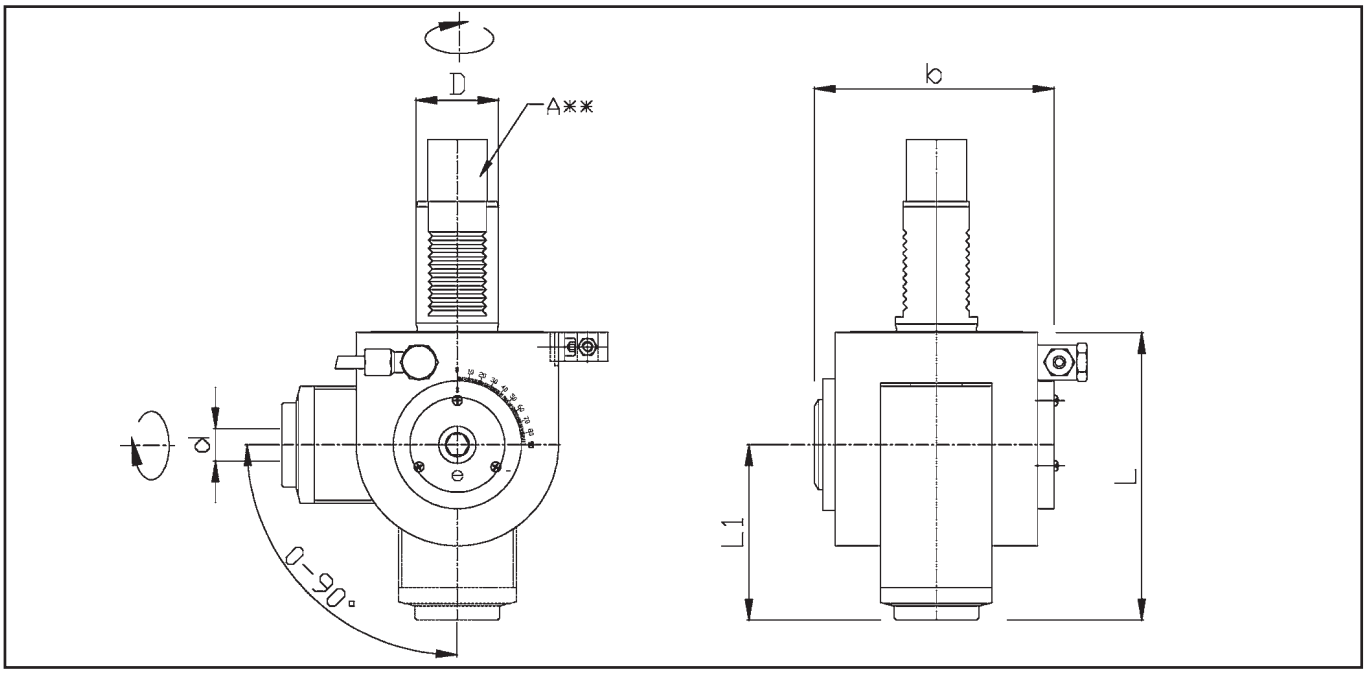

ORDER NO.	D (mm)	d	L (mm)	L1 (mm)	b2 (mm)	RPM Max	Ratio	Nm	Kg.
TE30E1035	**30**	ECX/ER16	120	76	92	6000	1:1	10	4.6
HE40E1636	**40**	ECX/ER25	140	85	116	6000	1:1	25	6.8
HE40E1637	**40**	ECX/ER25	140	85	116	6000	1:1	25	6.8

Drive A** / D (mm)	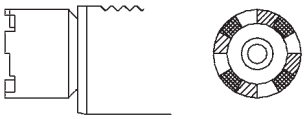 TYPE II	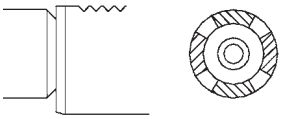 TYPE I
30	–	...35 LB10M-LB1011M LR10M-LB200M
40	–	...36 LB15M-LB1511M LB1511MY-LU15M LB300M-LB300MY LU300M-L370M LVT300M-LVT400M
40	–	...37 LB25M-LU25M LB2511M-LU400 L470M
50	...39 LB3511M	...38 LU35M-LB45 LU45

TECHLEADER® TOOLING INC.

OKUMA
Driven Tool For Slitting-Milling Cutters

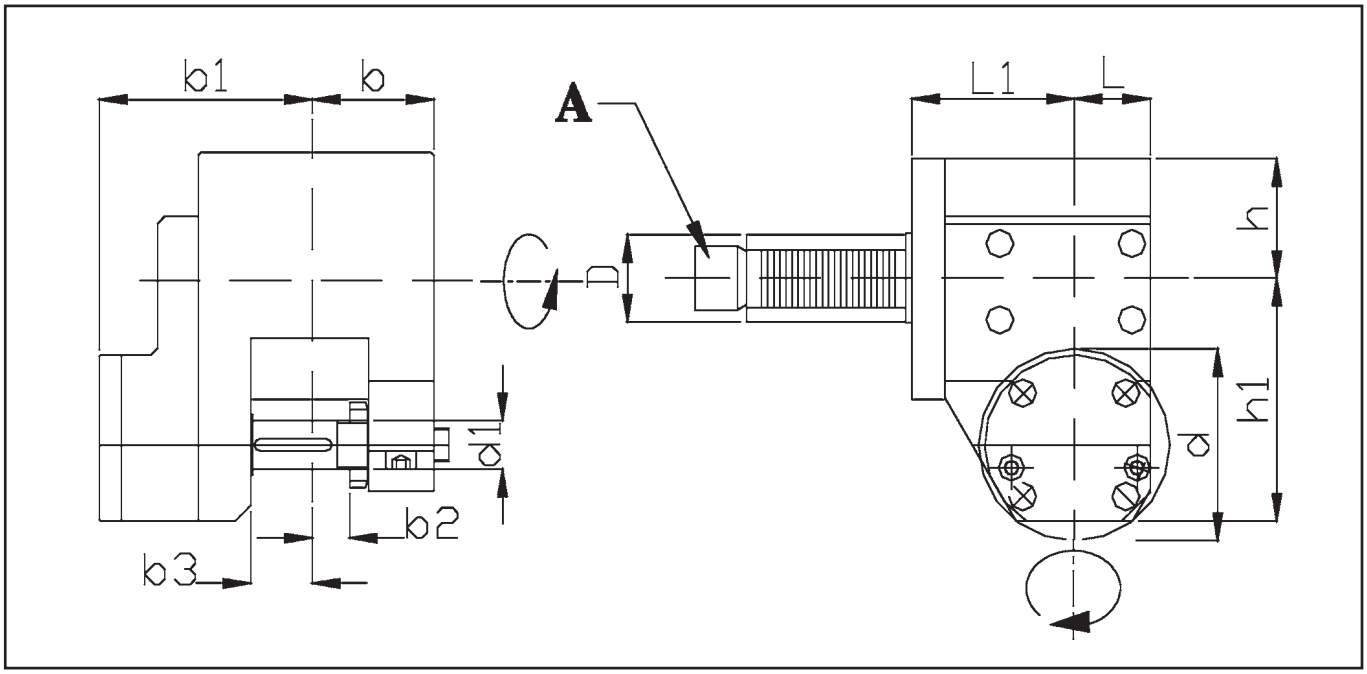

ORDER NO.	D (mm)	d	d1 (mm)	h (mm)	h1 (mm)	L (mm)	L1 (mm)	b (mm)	b1 (mm)	b2 (mm)	RPM Max	Ratio	Nm	Kg.
TD30V6335	30	ECX/ER63	16	42	80	25	54	40	70	18	2000	1:1	25	5.5
TD40V6336	40	ECX/ER63	16	42	80	25	54	40	70	18	2000	1:1	25	6.5
TD40V6337	40	ECX/ER63	16	42	80	25	54	40	70	18	2000	1:1	25	6.5

Drive A** / D (mm)	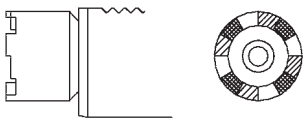 TYPE II	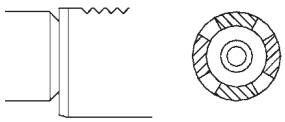 TYPE I
30	–	...35 LB10M-LB1011M LR10M-LB200M
40	–	...36 LB15M-LB1511M LB1511MY-LU15M LB300M-LB300MY LU300M-L370M LVT300M-LVT400M
40	–	...37 LB25M-LU25M LB2511M-LU400 L470M
50	...39 LB3511M	...38 LU35M-LB45 LU45

TECHLEADER® TOOLING INC.

OKUMA

Axial Adjustable Y-Axis Drilling & Milling Heads

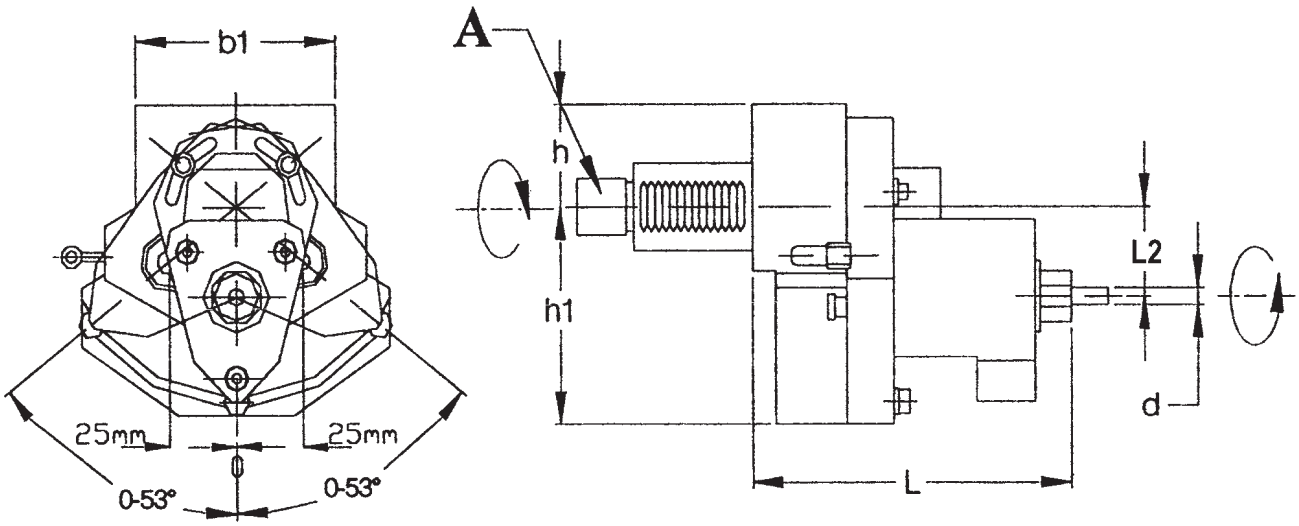

ORDER NO.	D (mm)	d	L2 (mm)	L (mm)	h (mm)	h1 (mm)	b1 (mm)	RPM Max	Ratio	Nm
TE30H1035	**30**	ECX/ER16	31.5	120	40	75	80	6000	1:1	25
TE40H1036	**40**	ECX/ER16	31.5	120	40	75	80	6000	1:1	25
TE40H1036	**40**	ECX/ER16	31.5	120	40	75	80	6000	1:1	25

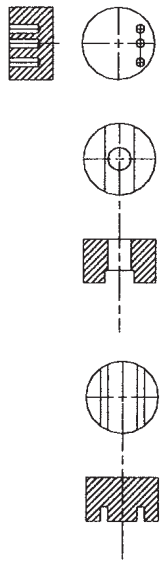

TAPPING HEAD (BLILZ)

Drive A** / D (mm)	TYPE II	TYPE I
30	–	...35 LB10M-LB1011M LR10M-LB200M
40	–	...36 LB15M-LB1511M LB1511MY-LU15M LB300M-LB300MY LU300M-L370M LVT300M-LVT400M
40	–	...37 LB25M-LU25M LB2511M-LU400 L470M
50	...39 LB3511M	...38 LU35M-LB45 LU45

TECHLEADER® TOOLING INC.

OKUMA
Radial Adjustable Y-Axis & Milling Heads

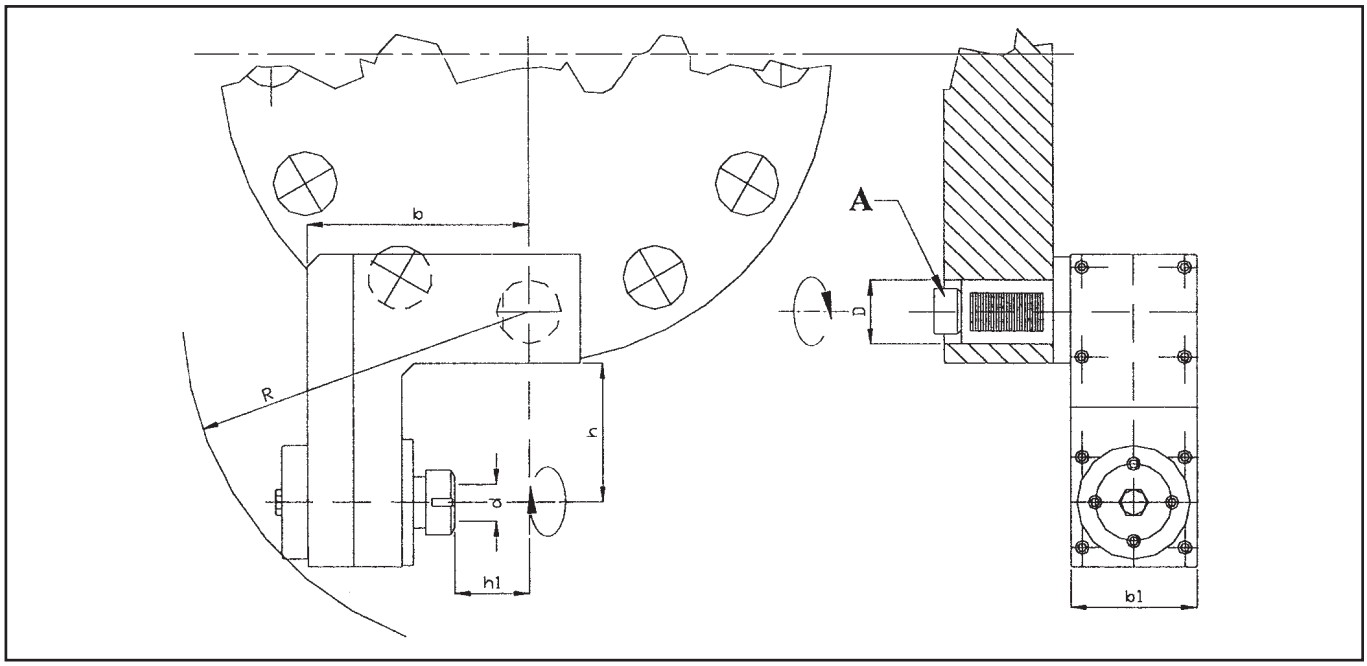

ORDER NO.	D (mm)	d	R (mm)	h (mm)	h1 (mm)	b (mm)	b1 (mm)	RPM Max	Ratio	Nm	Kg.
TE30D1035	**30**	ECX/ER20	170	45	25	140	70	4500	1:1	25	7.0
TE40D1036	**40**	ECX/ER32	200	80	30	140	80	4500	1:1	50	8.3
TE40D1036	**40**	ECX/ER32	200	80	30	140	80	4500	1:1	50	8.3

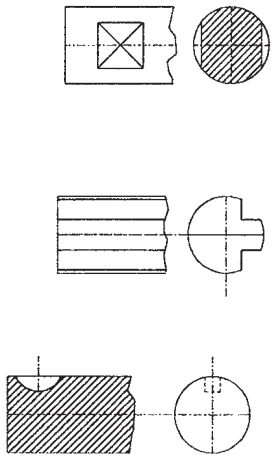

WORKING EXAMPLE

Drive A** / D (mm)	TYPE II	TYPE I
30	–	...35 LB10M-LB1011M LR10M-LB200M
40	–	...36 LB15M-LB1511M LB1511MY-LU15M LB300M-LB300MY LU300M-L370M LVT300M-LVT400M
40	–	...37 LB25M-LU25M LB2511M-LU400 L470M
50	...39 LB3511M	...38 LU35M-LB45 LU45

TECHLEADER® TOOLING INC.

Toolholders to Fit Mazak SQT & Multiplex CNC Lathes

Forward Turn

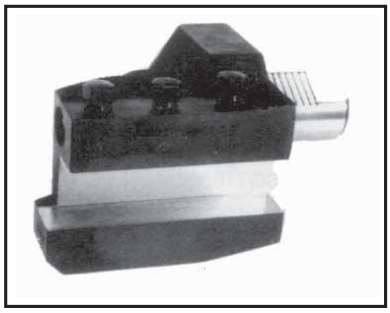

Machine Model	Description	Mazak No.	Order No.
SQT10/100	Forward Turn	53518010100	110-FTH40
SQT15/18/200/250	Forward Turn	53618010100	115-FTH40
SQT28	Forward Turn	53818010100	128-FTH50
MP420/620/6200	Forward Turn	53478005200	MP620-FTM
MP430/630	Forward Turn	53478006101	MP630-FTM

Reverse Turn

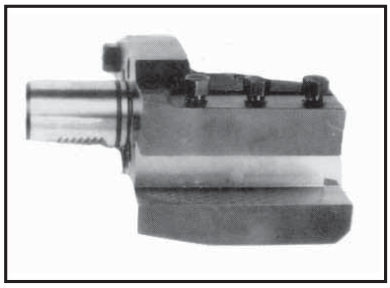

Machine Model	Description	Mazak No.	Order No.
SQT10/100	Reverse Turn	53518010700	110-RTH40
SQT15/18/200/250	Reverse Turn	53618010600	115-RTH40
SQT28	Reverse Turn	53818010600	128-RTH50
MP420/620/6200	Reverse Turn	53478005100	MP620-RTH
MP430/630	Reverse Turn	53488006001	MP630-RTH

Boring Bar

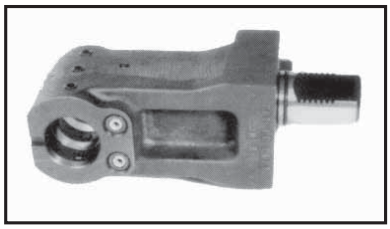

Machine Model	Description	Mazak No.	Order No.
SQT10/100	1-1/4” Boring Bar	53518010200	110-B0H40
SQT200/250	1-1/2” Boring Bar	53208015100	125-B0H40
SQT28	2” Boring Bar	53818010200	128-B0H50
MP420/620/6200	1-1/2” Boring Bar	53578005300	MP620-B0H
MP430/630	2” Boring Bar	53488006201	MP630-B0H

Facing Holder

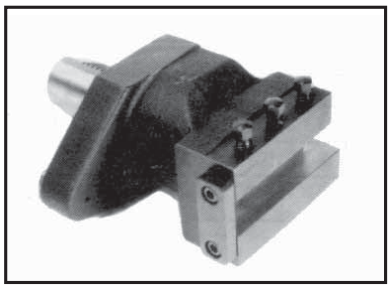

Machine Model	Description	Mazak No.	Order No.
SQT10/100	Facing Holder	53518010300	110-FAH40
SQT15/18/200/250	Facing Holder	53618010300	115-FAH40
SQT28	Facing Holder	53818010300	128-FAH50
MP420/620/6200	Facing Holder	53578005200	MP620-FAH
MP430/630	Facing Holder	53478806400	MP630-FAH

U-Drill Holder

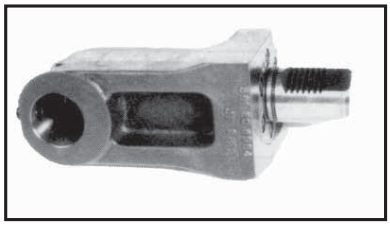

Machine Model	Description	Mazak No.	Order No.
SQT10/100	U-Drill Holder 32 mm	53518010500	110-UDH40
SQT15/18/200/250	U-Drill Holder 40mm	53208015200	115-UDH40
SQT28	U-Drill Holder 40mm	53818010500	128-UDH40
MP420/620/6200	U-Drill Holder 40mm	53478005700	MP620-UDH
MP430/630	U-Drill Holder 40mm	53488001801	MP630-UDH

Additional Mazak Toolholders available for other machines including Quick Turn (QT), Multiplex, and Dual Turn.

TECHLEADER® TOOLING INC.

Toolholders to Fit Mazak SQT CNC Lathes

Cut Off Holder

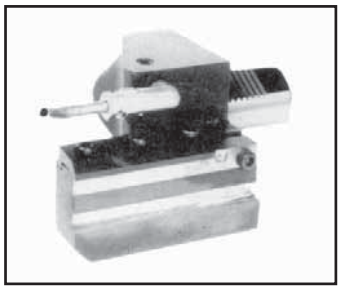

Machine Model	Description	Mazak No.	Order No.
SQT10/100	Cut off holder	53518000401	110-COH40
SQT15/18/200/250	Cut off holder	53618010400	115-COH40
SQT28	Cut off holder	53818000401	128-COH50
MP420/620-6200	Cut off holder	53478000900	MP620-COH
MP430/630	Cut off holder	53478001601	MP630-COH

Double Turn Holder

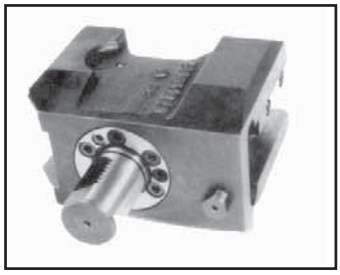

Machine Model	Description	Mazak No.	Order No.
SQT10/100	Double Turn	53538010100	110-DTH40
SQT15/18/200/250	Double Turn	53638010300	115-DTH40
SQT28	Double Turn	53838010800	128-DTH50

Double Boring Bar

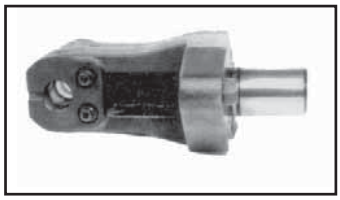

Machine Model	Description	Mazak No.	Order No.
SQT10/100	3/4” double boring	53538010200	110-SBH40
SQT15/18/200/250	1” double boring	53638010400	115-SBH40
SQT28	1” double boring	53838010900	128-SBH50

Turret Cap

Machine Model	Description	Mazak No.	Order No.
SQT10/100	Turret Cap	53518000600	110-CAP40
SQT15/18/200/250	Turret Cap	53618000600	115-CAP40
SQT28	Turret Cap	53818000700	128-CAP50

Turret Clamp Set

Machine Model	Description	Mazak No.	Order No.
SQT10/100	Turret Clamp Set	53518010700	110-TCS40
SQT15/18	Turret Clamp Set	53618010600	115-TCS40
SQT28	Turret Clamp Set		128-TCS50

Additional Mazak Toolholders available for other machines including Quick Turn (QT), Multiplex, and Dual Turn.

TECHLEADER® TOOLING INC.

Bushings/Parts for Mazak SQT Toolholders

Bushings

Order No.	Description	
	OD	ID
075-BS312	3/4”	5/16”
075-BS375	3/4”’	3/8”
075-BS500	3/4”	1/2”
075-BS625	3/4”	5/8”
100-BS312	1”	5/16”
100-BS375	1”	3/8”
100-BS500	1”	1/2”
100-BS625	1”	5/8”
100-BS750	1”	3/4”
110-BS312	1-1/4”	5/16”
110-BS375	1-1/4”	3/8”
110-BS500	1-1/4”	1/2”
110-BS625	1-1/4”	5/8”
110-BS750	1-1/4”	3/4”
110-BS1000	1-1/4”	1”
115-BS375	1-1/2”	3/8”
115-BS500	1-1/2”	1/2”
115-BS625	1-1/2”	5/8”
115-BS750	1-1/2”	3/4”
115-BS1000	1-1/2”	1”
115-BS1250	1-1/2”	1-1/4”
125-BS375	1-1/2”	3/8”
125-BS500	1-1/2”	1/2”
125-BS625	1-1/2”	5/8”
125-BS750	1-1/2”	3/4”
125-BS1000	1-1/2”	1”
125-BS1250	1-1/2”	1-1/4”
128-BS500	2”	1/2”
128-BS625	2”	5/8”
128-BS750	2”	3/4”
128-BS1000	2”	1”
128-BS1250	2”	1-1/4”
128-BS1750	2”	1-3/4”

Morse Taper Bushings

Order No.	Description	
	OD	M.T. No.
100-MT1	1”	1
100-MT2	1”	2
110-MT1	1-1/4”	1
110-MT2	1-1/4”	2
115-MT2	1-1/2”	2
115-MT3	1-1/2”	3
128-MT2	2”	2
128-MT3	2”	3
128-MT4	2”	4

U-Drill Bushing

Order No.	Description	
	OD	ID
010-US20	32mm	20mm
010-US25	32mm	25mm
015-US20	40mm	20mm
015-US25	40mm	25mm
015-US32	40mm	32mm

Parts

Description	Mazak No.	Order No.
SQT10		
Shank	3518066490	010-SHK40
Diamond Locator	3468048090	010-DML40
Nozzles	E00PBA6E020	00PBA6E020
Screw - Short	1411539851	1411539851
Screw - Long	3468048320	3468048320
SQT15/18/200/250		
Shank	3518066490	010-SHK40
Diamond Locator	1578010821	015-DML40
Nozzles	E00PBA6E020	00PBA6E020
Screw - Short	1421538641	1421538641
Screw - Long	3478047980	3478047980
SQT28		
Shank	CTA5990	028-SHK40
Diamond Locator	1578010821	028-DML40
Nozzles	E00PBA6E020	00PBA6E020
Screw - Short	1421538641	1421538641
Screw - Long	3478047980	3478047980

TECHLEADER® TOOLING INC.

Mazak Bolt-on Style Toolholders for Quick Turn (QT) Machines

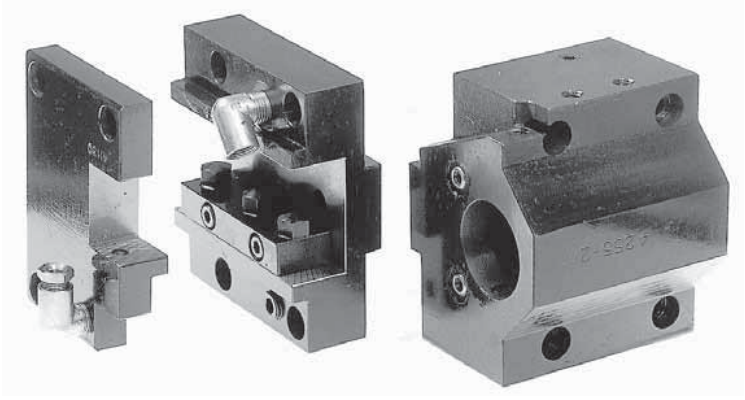

QT15 8D/QT 250-12D		
PART NO.	MAZAK PART NO.	DESCRIPTION
QT15-BOH	53418010403	Boring Bar Holder (1.500”)
QT15-FAH	53418010500	Facing Holder
QT15-FTH	53418010700	Forward Turning Holder
QT15-RTH	53418010800	Reverse Turning Holder
QT15-UDH	53418010600	U Drill Holder (40 mm)

QT15-12D		
PART NO.	MAZAK PART NO.	DESCRIPTION
QT12-12FAH	53418010201	Facing Holder

QT15 8D-16 Position		
PART NO.	MAZAK PART NO.	DESCRIPTION
QT15-16BOH	53418014600	Boring Bar Holder (1.500”)
QT15-16FAH	53418014800	Facing Holder
QT15-16FTH	53418015000	Forward Turning Holder
QT15-16UDH	53418015000	U-Drill Holder (40mm)

QT28 8D-16 Position / QT300		
PART NO.	MAZAK PART NO.	DESCRIPTION
QT28-BOH	53428004502	Boring Bar Holder (2.000”)
QT28-FAH	53428004402	Facing Holder
QT28-FTH	53428004300	Forward Turning Holder
QT28-UDH	53428004701	U-Drill Holder (2.000")

QT200-12D		
PART NO.	MAZAK PART NO.	DESCRIPTION
QT200-BOH	53258010500	Boring Bar Holder (1.250”)
QT200-FAH	53258010400	Facing Holder
QT200-FTH	53258010200	Forward Turning Holder
QT200-RTH	53258010300	Reverse Turning Holder

QTN100/12 Position		
PART NO.	MAZAK PART NO.	DESCRIPTION
QTN100-BOH	53108010400	Boring Bar Holder (1.250”)
QTN100-FAH	53108010300	Facing Holder
QTN100-FTH	53108010101	Forward Turning Holder
QTN100-RTH	53108010201	Reverse Turning Holder
QTN100-UDH	53108010500	U-Drill Holder (32mm)

QTN 200/250/300/350		
PART NO.	MAZAK PART NO.	DESCRIPTION
QTN200-BOH	53378010302	Boring Bar Holder (1.250”)
QTN350-BOH	MZK8007B	Boring Bar Holder (2.000”)
QTN200-FAH	53418010500	Facing Holder
QTN350-FAH	53208010300	Facing Holder
QTN200-DTH	53208010400	Turning Holder (Forward/Reverse)
QTN200-UDH	53208010100	U-Drill Holder (32mm)

QT350-12D		
PART NO.	MAZAK PART NO.	DESCRIPTION
QT350-BOH	51488000601	Boring Bar Holder (1.250”)
QT350-OBOH	51488000701	Offset Boring Bar Holder
QT350-FAH	51488000900	Facing Holder
QT350-TTH	MZK7227B	Tandem Turn Holder
QT350-UDH	51488001000	U-Drill Holder (2.000”)

The above is only an example of some of the toolholders we offer. Tools for other machine models are also available. Specials upon request.

It is critical to verify the number of stations on your machine turret or provide the eleven digit Mazak part number to insure the correct holder is being provided.

TECHLEADER® TOOLING INC.

Toolholder Bushings

This CNC Type C Bushing is designed for universal use on all CNC turning machines. To adapt a wide variety of Boring Bars, Drills, Reamers and Shank type tools. Precision machine hardened and ground concentric. Select the O.D. size that fits your machine and order from the accompanying chart.

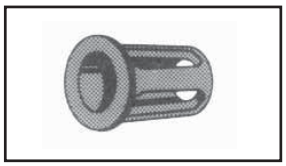

TYPE 'C'

Note:
Special bore sizes made to order

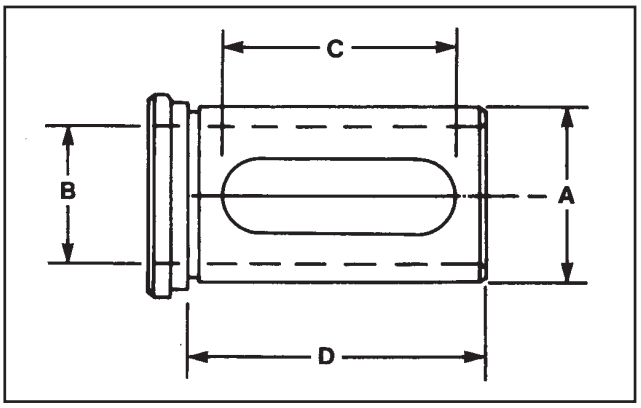

CNC Part Number	Bush Dia. A INCH	Bush Dia. A mm	Standard Bore Sizes Stocked B INCH	Standard Bore Sizes Stocked B mm	Length of Slot C	Length under head D	No. of Slots
CNC 86-10C	3/4	20	1/4 – 5/16 – 3/8 – 1/2	6, 8, 10, 12	1-1/2	2	1
CNC 86-11C	1	25	1/4 – 5/16 – 3/8 – 1/2 – 5/8 – 3/4	8, 10, 12, 16, 20	2-3/8	2-3/4	1
CNC 86-12C	1-1/4	32	3/8 – 1/2 – 5/8 – 3/4 – 7/8 – 1	10, 12, 16, 20, 25	2-3/4	3-1/4	1
CNC 86-13C	1-1/2	40	3/8 – 1/2 – 5/8 – 3/4 – 7/8 – 1 – 1-1/4	10, 12, 16, 20, 25, 32	3	3-3/8	1
CNC 86-14C	1-3/4	45	1/2 – 5/8 – 3/4 – 7/8 – 1 – 1-1/4 – 1-1/2	12, 16, 20, 25, 32, 40	3-1/8	3-1/2	1
CNC 86-15C	2	50	1/2 – 5/8 – 3/4 – 1 – 1-1/4 – 1-1/2 – 1-3/4	12, 16, 20, 25, 32, 40, 45	3-5/8	4	1
CNC 86-16C	2-1/2	65	3/4 – 1 – 1-1/4 – 1-1/2 – 1-3/4 – 2 – 2-1/4	20, 25, 32, 40, 45, 50	4-1/8	4-1/2	1 or 2*
CNC 86-17C	3	80	1 – 1-1/4 – 1-1/2 – 1-3/4 – 2 – 2-1/4 – 2-1/2	25, 32, 40, 50, 60, 65	4-5/8	5	1 or 2*
CNC 86-18C	3-1/2	90	1 – 1-1/4 – 1-1/2 – 1-3/4 – 2 – 2-1/4 – 2-1/2 – 3	25, 32, 40, 50, 60, 65	5	5-3/4	1 or 2*

* ID's larger than 1-1/2" have 2 slots.

The most flexible Toolholder Bushing for all types of NC-CNC Turret Lathes and Chuckers. The elongated slots give the user a complete inter-changeability with all brands of equipment. The bushings are hardened and precision ground concentric. Can be used also for preset tooling. Select the O.D. size that fits your machine and order from the accompanying chart.

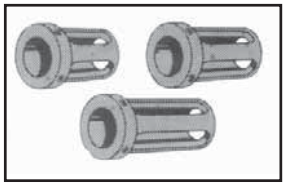

TYPE 'Z'

3 Lengths Available

Note:
Available in shorter and longer length under head

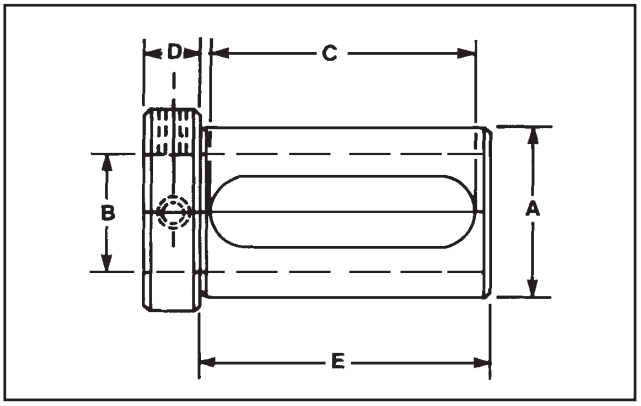

CNC Part Number	Bush Dia. A INCH	Bush Dia. A mm	Standard Bore Sizes Stocked B INCH	Standard Bore Sizes Stocked B mm	Length of Slot Style ZS	Length of Slot Style Z	Length of Slot Style ZL	Head Thickness	Length under head Style ZS	Length under head Style Z	Length under head Style ZL
					C			D	E		
CNC 86-40Z	¾	20	¼ - 5/16 - ⅜ - ½	6, 8,10,12		2⅜		½		2½	
CNC 86-41Z	1	25	¼ - 5/16 - ⅜ - ½ - ⅝ - ¾	8,10,12,16,20		2⅜		½		2¾	
CNC 86-42Z	1¼	32	⅜ - ½ - ⅝ - ¾ - ⅞ - 1	10,12,16,20,25	1⅞	2⅝	3⅜	⅝	2¼	3	3¾
CNC 86-43Z	1½	40	⅜ - ½ - ⅝ - ¾ - ⅞ - 1 - 1¼	10,12,16,20,25,32	2⅛	2⅞	3⅝	¾	2½	3¼	4
CNC 86-44Z	1¾	45	½ - ⅝ - ¾ - ⅞ - 1 - 1¼ - 1½ - 1¾	12,16,20,25,32,40	2⅜	3⅛	3⅞	¾	2¾	3½	4¼
CNC 86-45Z	2	50	½ - ⅝ - ¾ - ⅞ - 1 - 1¼ - 1½ - 1¾	12,16,20,25,32 40,45	2⅝	3½	4⅛	¾	3	3¾	4½
CNC 86-46Z	2½	65	⅝ - ¾ - ⅞ - 1 - 1¼ - 1½ - 1¾ - 2 - 2¼	16,20,25,32,40,45,50	3⅛	3⅞	4⅝	¾	3½	4¼	5
CNC 86-47Z	3	80	1 - 1¼ - 1½ - 1¾ - 2 - 2¼ - 2½	25,32,40,50,60,65	3⅜	4⅜	5⅜	¾	3¾	4¾	5¾
CNC 86-48Z	3½	90	1¼ - 1½ - 1¾ - 2 - 2¼ - 2½ - 3	32,40,50,60,65	3⅞	4⅞	5⅞	1	4½	5½	6½
CNC 86-49Z	4	100	1½ - 1¾ - 2 - 2¼ - 2½ - 3	40,50,60,65,80	4⅝	5⅝	7⅛	1	5	6¼	7½

TECHLEADER® TOOLING INC.

Toolholder Bushings

TYPE 'CS' Short Series

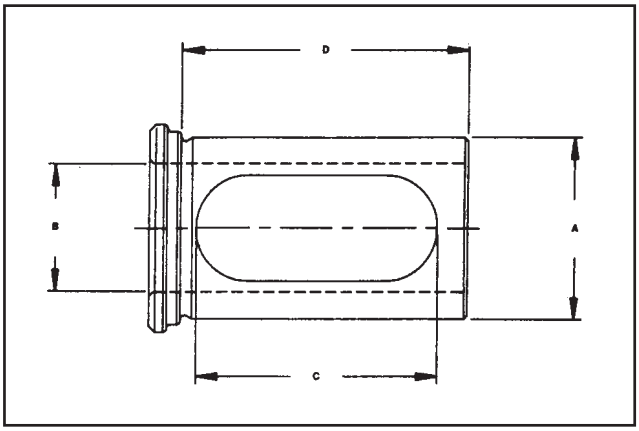

Note:
Special bore sizes made to order

Superior Design Premium Quality

Introducing the 'all-new' CNC Type CS Bushing designed for universal use on all CNC Turning machines. This toolholder is shorter than our standard C bushing for adaptation for a variety of Boring Bars, Drills, Reamers and Shank Type tools. The bushings are hardened & precision ground concentric. Select the O.D. size that fits your machine and order from accompanying chart

CNC Part Number	Bush Dia. A		Standard Bore Sizes Stocked B		Length of Slot	Length under head
	INCH	mm	INCH	mm	C	D
CNC 86-10CS	3/4	20	1/4 – 5/16 – 3/8 – 1/2	6, 8, 10, 12	1-1/8	1-1/2
CNC 86-11CS	1	25	1/4 – 5/16 – 3/8 – 1/2 – 5/8 – 3/4	8, 10, 12, 16, 20	1-3/8	1-3/4
CNC 86-12CS	1-1/4	32	3/8 – 1/2 – 5/8 – 3/4 – 7/8 – 1	10, 12, 16, 20, 25	1-3/4	2-1/8
CNC 86-13CS	1-1/2	40	3/8 – 1/2 – 5/8 – 3/4 – 7/8 – 1 – 1-1/4	10, 12, 16, 20, 25, 32	2-1/8	2-1/2
CNC 86-14CS	1-3/4	45	1/2 – 5/8 – 3/4 – 7/8 – 1 – 1-1/4 – 1-1/2	12, 16, 20, 25, 32, 40	2-5/8	3
CNC 86-15CS	2	50	1/2 – 5/8 – 3/4 – 1 – 1-1/4 – 1-1/2 – 1-3/4	12, 16, 20, 25, 32, 40, 45	3	3-1/2
CNC 86-16CS	2-1/2	65	3/4 – 1 – 1-1/4 – 1-1/2 – 1-3/4 – 2 – 2-1/4	20, 25, 32, 40, 45, 50	3-1/2	4
CNC 86-17CS	3	80	1 – 1-1/4 – 1-1/2 – 1-3/4 – 2 – 2-1/4 – 2-1/2	25, 32, 40, 45, 50, 60, 65	4-1/8	4-1/2
CNC 86-18CS	3-1/2	90	1 – 1-1/4 – 1-1/2 – 1-3/4 – 2 – 2-1/4 – 2-1/2 – 3	25, 32, 40, 45, 50, 60, 65	4-3/4	5-1/4

TYPE 'J'

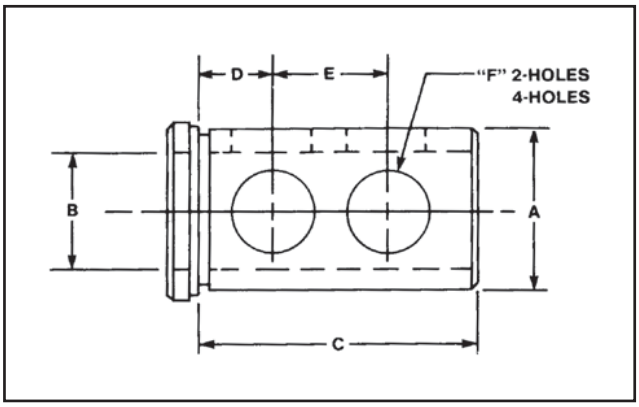

Note:
Special bore sizes made to order

MADE IN USA

This Type J Toolholder Bushing, with long solid body, has clearance holes so that you can clamp directly on the tool with set screws for positive alignment of the cutting edge of the tool. They are hardened and precision ground concentric. Select the O.D. size that fits your machine and order from the accompanying chart.

CNC Part Number	Bush Dia. A		Standard Bore Sizes Stocked B		Special Bore sizes avail.		Length under head	Length Dimensions		Hole Size	No. Holes
	INCH	mm	INCH	mm	MIN.	MAX.	C	D	E	F	
CNC 86-01J	3/4	20	1/4 - 5/16 - 3/8 - 1/2	6,8,10,12	3/16	3/8	1 1/2	3/8	13/16	3/8	2
CNC 86-02J	1	25	3/8 - 1/2 - 5/8 - 3/4	10,12,16,20	1/4	7/8	1 3/4	7/16	7/8	5/8	2
CNC 86-12J	1 1/4	32	3/8 - 1/2 - 5/8 - 3/4 - 7/8 - 1	10,12,16,20,25	1/4	1 1/8	2 1/8	5/8	1	3/4	2
CNC 86-03J	1 1/2	40	3/8 - 1/2 - 5/8 - 3/4 - 7/8 - 1 - 1 1/4	10,12,16,20,25,32	1/4	1 1/4	2 1/2	11/16	1 1/8	7/8	2
CNC 86-04J	1 3/4	45	1/2 - 5/8 - 3/4 - 7/8 - 1 - 1 1/4 - 1 1/2	12,16,20,25,32,40	1/4	1 1/2	3	3/4	1 1/4	7/8	2
CNC 86-05J	2	50	1/2 - 5/8 - 3/4 - 7/8 - 1 - 1 1/4 - 1 1/2 - 1 3/4	12,16,20,25,32 40,45	3/8	1 3/4	3 1/2	3/4	1 1/2	1	2
CNC 86-06J	2 1/2	65	3/4 - 7/8 - 1 - 1 1/4 - 1 1/2 - 1 3/4 -2-2 1/4	20,25,32,40,45,50	1/2	2 1/4	4	7/8	1 3/4	1 1/4	2
CNC 86-07J	3	80	1 - 1 1/4 - 1 1/2 - 1 3/4 - 2 - 2 1/4 - 2 1/2	25,32,40,45,50,60,65	1/2	2 1/2	4 1/2	1	2	1 1/4	4
CNC 86-08J	3 1/2	90	1 - 1 1/4 - 1 1/2 - 1 3/4 - 2 - 2 1/4 - 2 1/2 - 3	25,32,40,45,50,60,65	3/4	3	5 1/4	1 1/4	2 1/2	1 1/4	4

TECHLEADER® TOOLING INC.

Toolholder Bushings

TYPE 'LBF'

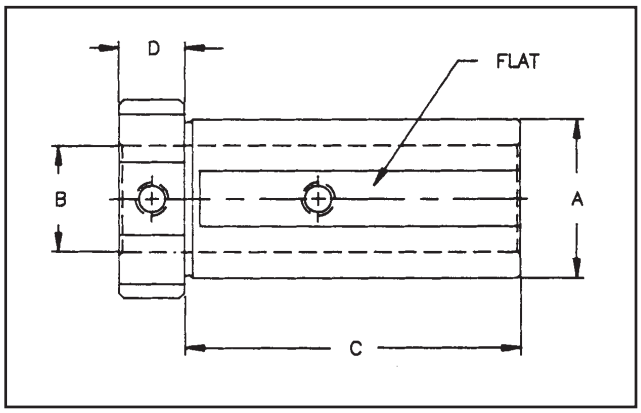

Note:
Special bore sizes made to order

Superior Design Premium Quality

These LBF Type Bushings are manufactured with a flat for clamping the Toolholder and two set screws for clamping a variety of drills, boring bars and other shank tools. Equipped with two clearance notches for coolant and are heat treated and precision ground concentric.

CNC Part Number	Bush Dia. A		Standard Bore Sizes Stocked B		Head Thickness	Length Under Head
	INCH	mm	INCH	mm	D	C
CNC 86-12LBF	1-1/4	32	¼ - ⅜ - ½ - ⅝ - ¾ - ⅞ - 1	8, 10, 12, 16, 20, 25	5/8	2-13/16
CNC 86-03LBF	1-1/2	40	¼ - ⅜ - ½ - ⅝ - ¾ - ⅞ - 1 - 1¼	10, 12, 16, 20, 25, 32	5/8	3-5/32
CNC 86-05LBF	2	50	½ - ⅝ - ¾ - ⅞ - 1 - 1¼ - 1½ - 1¾	12,16, 20, 25, 32, 40, 45	3/4	3-3/4

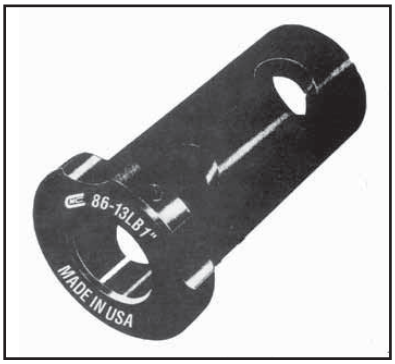

TYPE 'LB'

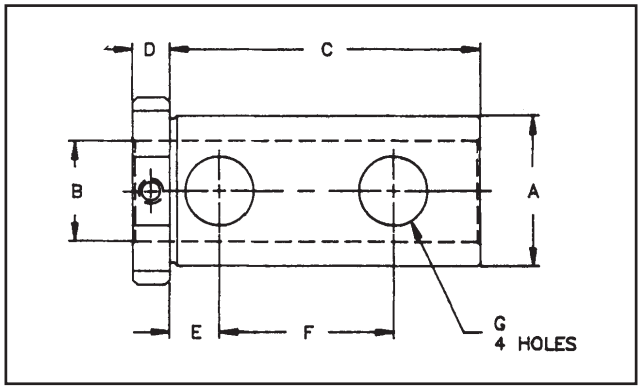

Note:
Special bore sizes made to order

Superior Design Premium Quality

This Type LB Toolholder Bushing with long solid body, has four clearance holes so that you can clamp directly on the tool with set screws for positive alignment of the cutting edge of the tool. Manufactured to include clearance notches for coolant. They are hardened and precision ground concentric.

CNC Part Number	Bush Dia. A		Standard Bore Sizes Stocked B		Head Thick-ness	Length Under Head	Length Dimensions		Hole Size
	INCH	mm	INCH	mm	D	C	E	F	G
CNC 86-13LB	1-1/2	40	¼ - ⅜ - ½ - ⅝ - ¾ - ⅞ - 1 - 1¼	10,12,16,20,25,32	3/8	3-1/8	1/2	1-3/4	5/8

TECHLEADER® TOOLING INC.

Toolholder Bushing

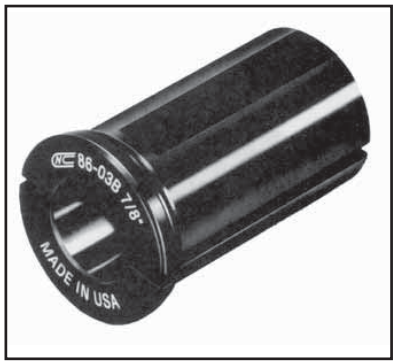

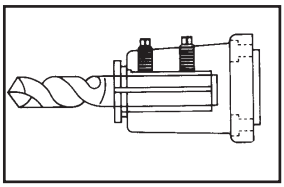

TYPE 'B'

Note:
Special bore sizes made to order

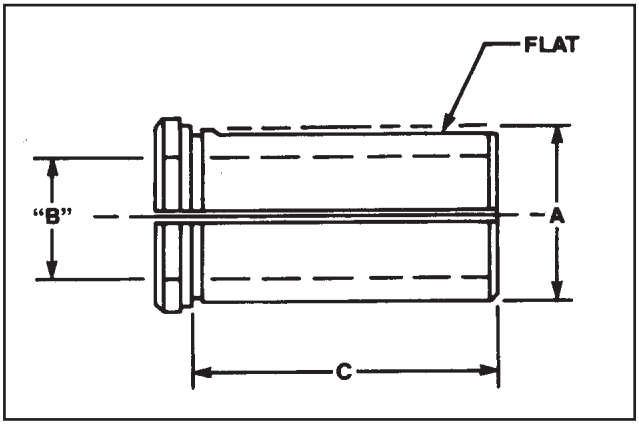

These split Type B Bushings are manufactured with flexible manufacturing systems, for all types and sizes of NC, CNC Lathes and Chuckers, are heat treated and precision ground concentric. It is used to adapt drills, boring bars, and other shank tools. Select the O.D. size that fits your machine and order from the accompanying chart.

Order Number	Bush Dia. A		Standard Bore Sizes Stocked B		Special Bore sizes avail.		Length Under Head
	INCH	mm	INCH	mm	MIN.	MAX.	C
8601B	3/4	20	¼ - 5/16 - ⅜ - ½	6, 8, 10, 12	3/16	5/8	1-1/2
8602B	1	25	⅜ - ½ - ⅝ - ¾	10, 12, 16, 20	3/16	7/8	1-3/4
8612B	1-1/4	32	⅜ - ½ - ⅝ - ¾ - ⅞ - 1	10, 12, 16, 20, 25	3/16	1	2-1/8
8603B	1-1/2	40	⅜ - ½ - ⅝ - ¾ - ⅞ - 1 - 1¼	10, 12,16, 20, 25, 32	3/16	1-1/4	2-1/2
8604B	1-3/4	45	½ - ⅝ - ¾ - ⅞ - 1 - 1¼ - 1½	10, 12,16, 20, 25, 32,40	1/4	1-1/2	3
8605B	2	50	½ - ⅝ - ¾ - ⅞ - 1 - 1¼ - 1½ - 1¾	12, 16, 20, 25, 32, 40	1/2	1-3/4	3-1/2
8606B	2-1/2	65	½ - ⅝ - ¾ - ⅞ - 1 - 1¼ - 1½ - 1¾ - 2 - 2¼	20, 25, 32, 40, 45, 50	1/2	2-1/4	4
8607B	3	80	1 - 1¼ - 1½ - 1¾ - 2 - 2¼ - 2½	25, 32, 40, 45, 50, 60, 65	5/8	2-1/2	4-1/2
8608B	3-1/2	90	1 - 1¼ - 1½ - 1¾ - 2 - 2¼ - 2½ - 3	25, 32, 40, 45, 50, 60, 65	5/8	3	5-1/4

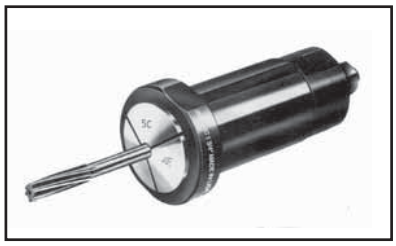

5C Collet Holder Bushing

Superior Design Premium Quality

This brand new 5C Collet Holder Bushing is used to adapt all kinds of Drills, Reamers, Counter Bores and End Mills to your CNC machines. Adds flexibility, versatility and reduces set-up time.

NEW PRODUCTS FROM OUR ENGINEERING DEPARTMENT...
TIME TO CUT DOWN ON YOUR TOOLING COST!!

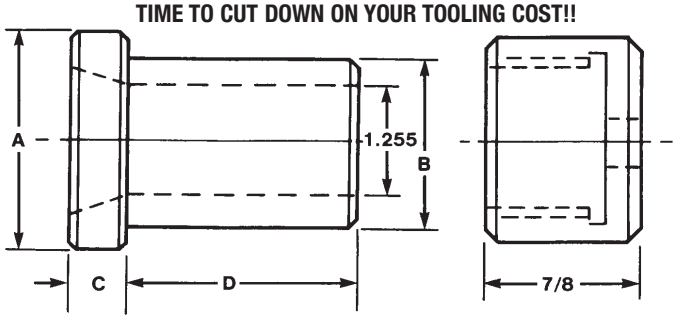

Order Number	DIMENSIONS A	B	C	D	O.D. Nut Size
885C-1500	2	1-1/2"	1/2	2-1/4	1-31/64
885C-40		40 mm			
885C-1750	2-1/4	1-3/4"	1/2	2-1/4	1-11/16
885C-45		45 mm			
885C-2000	2-1/2	2"	1/2	2-1/4	1-15/16
885C-50		50 mm			
885C-2500	3	2-1/2"	1/2	2-1/4	2-7/16
885C-65		65 mm			

TECHLEADER® TOOLING INC.

Boring Bar Sleeves

NOTE:
Special O.D. and I.D. sizes made to order.
1-1/4 diameter now available

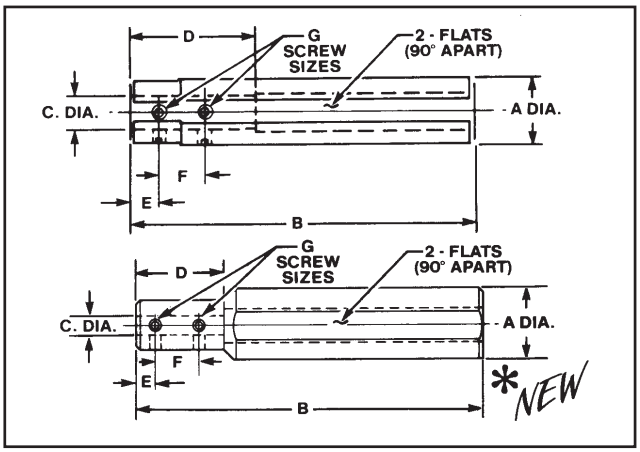

CNC boring bar sleeves are universally used to adapt all boring bar or shank type tools to any CNC turning machines and machining centers for extensions or hard to reach areas. They are hardened, precision ground, concentric, and black oxided for long lasting protection. Select the O.D. size, length and I.D. size from the accompanying chart

*** This new innovative design on the 1-1/2 O.D. boring bar sleeves helps the tools stay cool longer by projecting the coolant directly on the cutting edge.**

CNC Part Number	Dimensions								Screw Size
	A		B	C		D	E	F	
	INCH	mm		INCH	mm				
CNC 88-15	3/4	20	5	1/4	6	1-1/2	5/16	5/8	10-32
CNC 88-16	3/4	20	5	5/16	8	1-1/2	5/16	5/8	10-32
CNC 88-17	3/4	20	5	3/8	10	1-1/2	5/16	5/8	10-32
CNC 88-18	3/4	20	5	1/2	12	3	5/16	5/8	10-32
CNC 88-19	1	25	6	5/16	8	1-3/4	7/16	5/8	1/4-28
CNC 88-20	1	25	6	3/8	10	1-3/4	7/16	5/8	1/4-28
CNC 88-21	1	25	6	1/2	12	2	7/16	5/8	1/4-28
CNC 88-125	1-1/4	32	6-1/2	3/8	10	1-1/2	5/16	5/8	1/4-28
CNC 88-126	1-1/4	32	6-1/2	1/2	12	2-1/4	7/16	5/8	1/4-28
CNC 88-127	1-1/4	32	6-1/2	5/8	16	2-1/2	7/16	3/4	1/4-28
CNC 88-128	1-1/4	32	6-1/2	3/4	20	3	7/16	3/4	1/4-28
CNC 88-129	1-1/4	32	6-1/2	7/8	22	4	7/16	3/4	10-32
CNC 88-130	1-1/4	32	6-1/2	1	25	4	7/16	3/4	10-32
CNC 88-22*	1-1/2	40	7	3/8	10	2	5/16	5/8	1/4-28
CNC 88-23*	1-1/2	40	7	1/2	12	2-1/4	7/16	11/16	5/16-24
CNC 88-24*	1-1/2	40	7	5/8	16	2-1/4	7/16	3/4	5/16-24
CNC 88-25*	1-1/2	40	7	3/4	20	2-1/2	7/16	3/4	5/16-24
CNC 88-26*	1-1/2	40	8	7/8	22	3	7/16	3/4	1/4-28
CNC 88-27*	1-1/2	40	8	1	25	4	7/16	7/8	1/4-28
CNC 88-28	1-3/4	45	8	1/2	12	2-1/2	5/16	5/8	5/16-24
CNC 88-29	1-3/4	45	8	5/8	16	2-1/2	7/16	1	5/16-24
CNC 88-30	1-3/4	45	8	3/4	20	2-1/2	7/16	1	3/8-24
CNC 88-31	1-3/4	45	8	7/8	22	2-1/2	7/16	1	3/8-24
CNC 88-32	1-3/4	45	8	1	25	2-1/2	7/16	1	3/8-24
CNC 88-34	2	50	9	5/8	16	2	7/16	1	7/16-20
CNC 88-35	2	50	9	3/4	20	2-3/4	7/16	1	7/16-20
CNC 88-33	2	50	9	7/8	22	2	7/16	1	7/16-20
CNC 88-36	2	50	9	1	25	3-1/2	7/16	1	1/2-20
CNC 88-37	2	50	9	1-1/4	32	3	5/8	1	1/2-20
CNC 88-38	2-1/2	65	10	5/8	16	3-1/2	7/16	1	1/2-20
CNC 88-39	2-1/2	65	10	3/4	20	3-1/2	7/16	1	1/2-20
CNC 88-40	2-1/2	65	10	1	25	4	7/16	1	1/2-20
CNC 88-41	2-1/2	65	10	1-1/4	32	4	5/8	1	1/2-20
CNC 88-42	2-1/2	65	10	1-1/2	40	3-1/2	1/2	1	1/2-20
CNC 88-45	3	80	11-1/2	1	25	4	1/2	1	1/2-20
CNC 88-43	3	80	11-1/2	1-1/4	32	3-1/2	1/2	1	1/2-20
CNC 88-44	3	80	11-1/2	1-1/2	40	4-1/2	1/2	1	1/2-20
CNC 88-47	3	80	11-1/2	1-3/4	45	3-3/4	5/8	1-1/4	1/2-20
CNC 88-46	3	80	11-1/2	2	50	4-1/2	1/2	1	1/2-20
CNC 88-50	4	100	14	1-1/2	40	3-3/4	19/32	1-7/8	5/8-18
CNC 88-51	4	100	14	1-3/4	45	3-3/4	5/8	1-7/8	5/8-18
CNC 88-52	4	100	14	2	50	3-3/4	19/32	1-3/4	5/8-18
CNC 88-53	4	100	14	2-1/2	65	4	5/8	2	5/8-18
CNC 88-54	4	100	14	3	80	4	3/4	1-1/4	5/8-18

TECHLEADER® TOOLING INC.

Taper Drill Sockets

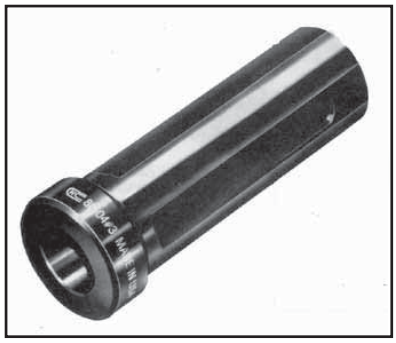

Taper Drill Sockets

Superior Design Premium Quality

The straight shank style "A" taper drill sockets are manufactured in limited quantities and sizes. Please contact our courteous sales staff for availability and pricing information. Select the O.D. size that fits your machine and order from the accompanying chart.

THE NEW HEADED SERIES:

All of our taper drill sockets have been redesigned with a shoulder, as a "B" style, to further insure correct depth of the drilling operation. This new style also provides safety for secondary operations such as boring and reaming. It is held with set screws on two flats, so that it will never push back or turn. Our taper drill sockets are hardened, precision ground, and concentric within .0002 of an inch. They fit directly into toolholders and turrets to positively drive all morse taper shank tools, drills, reamers, and counterbores.

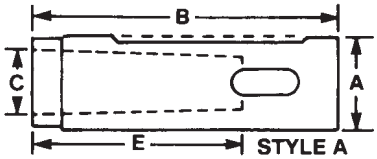

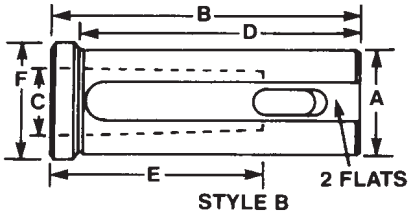

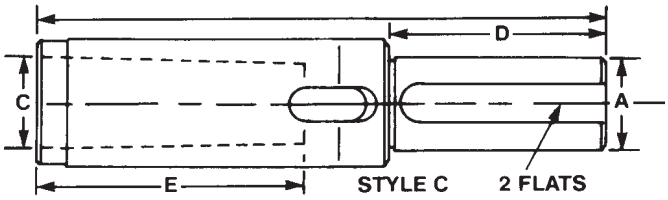

NOTE: Specials made to order

CNC Part Number	Style	Shank Dia A IN.	Shank Dia A mm	B	Morse Taper C	D	E	F
CNC 86-01-1	A	3/4	20	3-1/4	No. 1	2-5/16	2-3/16	1
CNC 86-02-1	B	1	25	3-3/4	No. 1	3-1/8	2-3/16	1-1/4
CNC 86-02-2	B	1	25	3-3/4	No. 2	3-1/8	2-5/8	1-1/4
CNC 86-03-1	B	1-1/4	32	4	No. 1	3-3/8	2-3/16	1-1/2
CNC 86-03-2	B	1-1/4	32	4	No. 2	3-3/8	2-5/8	1-1/2
CNC 86-03-3	B	1-1/4	32	4	No. 3	4	3-1/4	1-1/2
CNC 86-04-1	B	1-1/2	40	5	No. 1	4-3/8	2-3/16	1-3/4
CNC 86-04-2	B	1-1/2	40	5	No. 2	4-3/8	2-5/8	1-3/4
CNC 86-04-3	B	1-1/2	40	5	No. 3	4-3/8	3-1/4	1-3/4
CNC 86-04-4	B	1-1/2	40	5-3/4	No. 4	4-3/8	4-1/8	1-3/4
CNC 86-05-1	B	1-3/4	45	5-3/4	No. 1	5-1/8	2-3/16	2
CNC 86-05-2	B	1-3/4	45	5-3/4	No. 2	5-1/8	2-5/8	2
CNC 86-05-3	B	1-3/4	45	5-3/4	No. 3	5-1/8	3-1/4	2
CNC 86-05-4	B	1-3/4	45	5-3/4	No. 4	4-3/8	4-1/8	2
CNC 86-06-5	C	1-3/4	45	11-1/8	No. 5	4-1/4	5-1/4	1-3/8
CNC 86-07-2	B	2	50	6-1/8	No. 2	5-1/2	2-5/8	2-1/4
CNC 86-07-3	B	2	50	6-1/8	No. 3	5-1/2	3-1/4	2-1/4
CNC 86-07-4	B	2	50	6-1/8	No. 4	5-1/2	4-1/8	2-1/4
CNC 86-08-5	C	2	50	11-1/8	No. 5	4-1/4	5-1/4	2-3/8
CNC 86-09-2	B	2-1/2	65	5-3/4	No. 2	5-1/8	2-5/8	2-3/4
CNC 86-09-3	B	2-1/2	65	6-5/8	No. 3	6	3-1/4	2-3/4
CNC 86-09-4	B	2-1/2	65	6-5/8	No. 4	6	4-1/8	2-3/4
CNC 86-09-5	B	2-1/2	65	7-5/8	No. 5	7	5-1/4	2-3/4
CNC 86-11-4	B	3	80	6-5/8	No. 4	6	4-1/8	3-3/8
CNC 86-12-5	B	3	80	7-5/8	No. 5	7	5-1/4	3-3/8
CNC 86-13-4	B	2-1/4	60	6-5/8	No. 4	6	4-1/8	2-1/2
CNC 86-14-5	B	2-1/4	60	7-5/8	No. 5	7	5-1/4	2-1/2
CNC 86-15-4	B	2-3/4	70	6-5/8	No. 4	6	4-1/8	3
CNC 86-16-5	B	2-3/4	70	7-5/8	No. 5	7	5-1/4	3

TECHLEADER® TOOLING INC. LLAMBRICH

Revolving Lathe Centers

- For Accurate work holding in conventional or CNC lathes.
- Needle roller bearings in the head and at rotary shaft end, and precision axial bearings allow heavy loads with compact body dimensions.
- Capable to hold up to 1,000 kg. workpiece, and speeds up to 5,000 rpm.
- High precision accurate to 0.004 mm/0.00016” T.I.R.
- Fully hardened and precision ground.
- Standard or extended spindle configurations.
- Maintenance free.

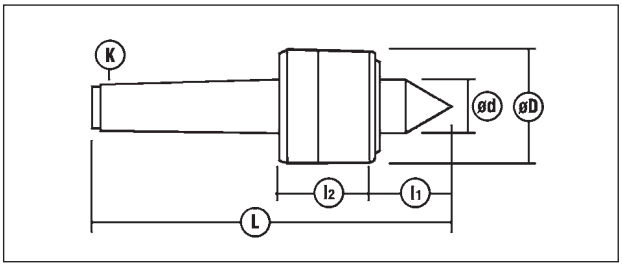

Model RN

Designed for wide range of general turning work

Order No.	Model	Morse Taper K	Load Factor kg/lbs	Sizes in mm D	d	l1	l2	L	Weight kgs	Maximum Eccentricity
570-002	R-200N	2	180/396	42	18	24	35	128	0.430	0.003 mm / 0.00012”
570-003	R-300N	3	400/880	49	22	29	47	163	0.875	0.003 mm / 0.00012”
570-004	R-400N	4	800/1760	63	25	35	52	196	1.505	0.003 mm / 0.00012”
570-005	R-500N	5	1750/3850	85	35	48	64	250	3.955	0.004 mm / 0.00016”

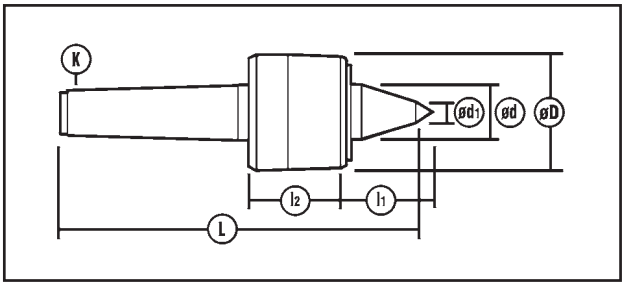

Order No.	Model	Morse Taper K	Load Factor kg/lbs	Sizes in mm D	d	d1	l1	l2	L	Weight kgs	Maximum Eccentricity
570-023	R-300C	3	400/880	49	22	49	38	47	174	0.875	0.003 mm / 0.00012”
570-024	R-400C	4	800/1760	63	30	63	46	52	207	1.505	0.003 mm / 0.00012”
570-025	R-500C	5	1750/3850	85	35	85	64	64	266	3.955	0.004 mm / 0.00016”

Model RC

Increases tool clearance and operator visibility for work on small parts or machining close to workpiece end.

SECTION 5

Soft & Hard Top Jaws, Samchully & Kitagawa Power Chucks, Collet Chucks, Tombstones & Vises

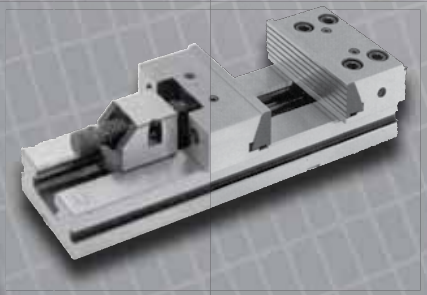

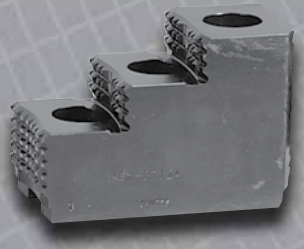

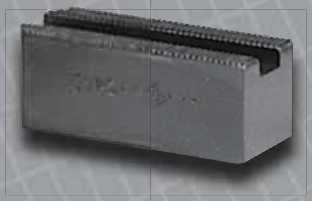

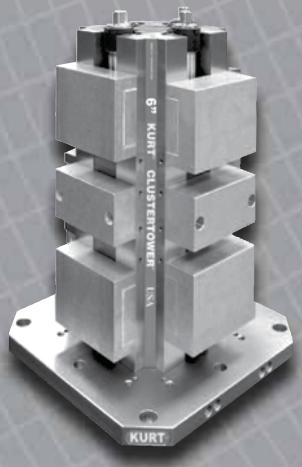

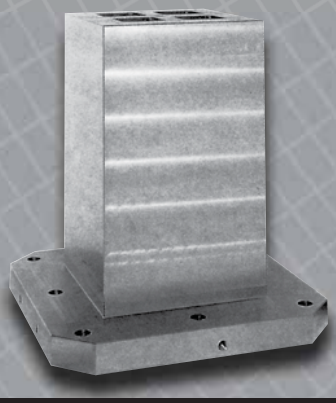

Soft & Hard Top Jaws, Samchully & Kitagawa Power Chucks, Collet Chucks, Tombstones & Vises

Techleader offers a complete range of soft and hard top jaws for virtually all makes of power chucks manufactured in the USA, Italy, Japan, the UK and Germany.

We carry a full stock of standard soft jaws, extra high soft jaws, and jaw nuts. We also offer a complete design and engineering service for customers requiring custom-engineered jaws.

Several of our products are unique. These include:

- A line of diamond jaws designed to clamp the entire circumference of the workpiece, eliminating any distortion.
- Adjustagrip hard jaws, offering superior gripping for higher metal removal rates. These are used in place of standard and special hard jaws.
- A Trueborer fixture for boring out soft jaws. This fixture is adjustable for various diameter, so that only one fixture is required for a range of different chuck sizes.

The following section also details other products for workholding, such as our new power chucks from Samchully, new manual chucks from TdeG, our new quick change dead length collet chucks from DEL/Kitagawa, Eron 5 axis vices, Techleader/Auto Super precision vises, and two and four face tombstones.

TECHLEADER® TOOLING INC.

Top Jaws
Technical Information

Materials

Most *Techleader* standard jaws are manufactured from either 080M15 (En 32) low carbon steel or 590M17 (16MnCr5) alloy steel which can be case-hardened for long-term durability. Other materials can of course be used, for example more exotic steels, aluminums, plastics and composites and these are all available as specials. T-nuts are manufactured from En24 heat-treated to the 'T' condition.

Below is a simple table showing British Standard and corresponding German reference numbers for various steels used in the production of Techleader products.

MATERIAL	BS 970/83	BS 970/55	GERMAN
Steel	080M15	En32	C15
Steel	665M17	En34	
Steel	080M40	En8	C45
Steel	590M17		16MnCr5
Steel	817M40	En24T	40NiCrMo6

Unless otherwise stated, all special jaws will be manufactured using material specified on the drawings supplied by the customer.

Heat Treatment

All Techleader standard soft jaws can be case-hardened using heat treatment. See chart for guidelines.

		MATERIAL TYPE	
		080M15 (EN32)	590M17 (16MnCr5)
	Depth of Case	Rockwell Hardness 'C'	
Thin Section	0.38 - 0.5 mm	54 - 56	57 - 59
Normal Section	0.63 - 0.75 mm	56 - 58	58 - 60
Thick Section	0.76- 1 mm	57 - 59	59 - 61

Top Jaw Weights

Careful consideration must be given when fitting oversized top jaws to a rotating chuck because the safety and performance of the chuck may be compromised. Although the calculations given in the chart below can establish approximate theoretical grip loss, the most accurate method is to establish the actual performance of the jaws on the machine, this can usually be carried out by use of a grip meter.

Techleader offers grip meter equipment for sale or hire and in either case full instructions for use and any advice required are included. Please contact our sales office for further details.

Jaw Location Dimensions

Chuck manufacturers occasionally change specifications on location details so it is important to check that the dimensions listed (right) correspond with your existing top jaws, master jaws and chuck.

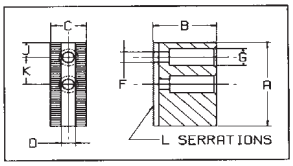

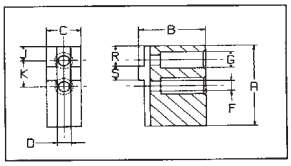

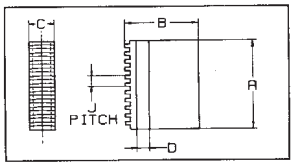

L = Pitch & angle of serrations
1.5 mm x 60°; 1/16" x 90°
3 mm x 60°; 3/32" x 90°
D = slot width (locates on T-nut)
K = hole Center spacing
G = bolt nut (see note below)

D = slot width
S = tenon width
K = hole Center spacing
G = bolt hole (see note below)

C = jaw width
D = slot width
J = tooth pitch

Note: Remember the bolt hole will have clearance on the bolt. It is important that these dimensions are measured accurately. The use of a vernier or micrometer is recommended.

Warning

While every effort is made to make sure the information relating to technical data is correct, manufacturers do change specifications of their products and subsequently *Techleader* shall not be liable for any loss or consequential damage whatsoever that may arise from the use of the products, the use of information or particulars or any error or omission in this catalogue. The responsibility of correct fit and use lies with the user and the information in this catalogue should be used only as a guide.

Soft Scroll Jaws

Techleader soft scroll jaws have been manufactured to allow for a small degree of wear in the chuck guideway, therefore the slots are slightly undersized and the width slightly oversized. A minor amount of adjustment may be required to obtain a correct fit, particularly if the chuck is new.

Concentricity

Techleader manufactured standard hard jaws are made to a 0.05 - 0.07mm (0.002"-0.003") micron concentricity tolerance using our purpose made fixtures. For optimum concentricity jaws must be ground on the chuck in the correct position on the machine.

Please Note: The condition of the chuck has a great bearing on concentricity and repeatability of jaw sets. Regular servicing of chucks will prolong their life and maintain a higher level of operating accuracy. For unparalleled concentricity when boring standard soft jaws a Techleader Trueborer is available.

TECHLEADER® TOOLING INC.

Top Jaws
Technical Information

Grip Loss Due to Centrifugal Forces

The following chart shows the typical grip loss for different types of standard jaws on a 200 dia wedge type chuck

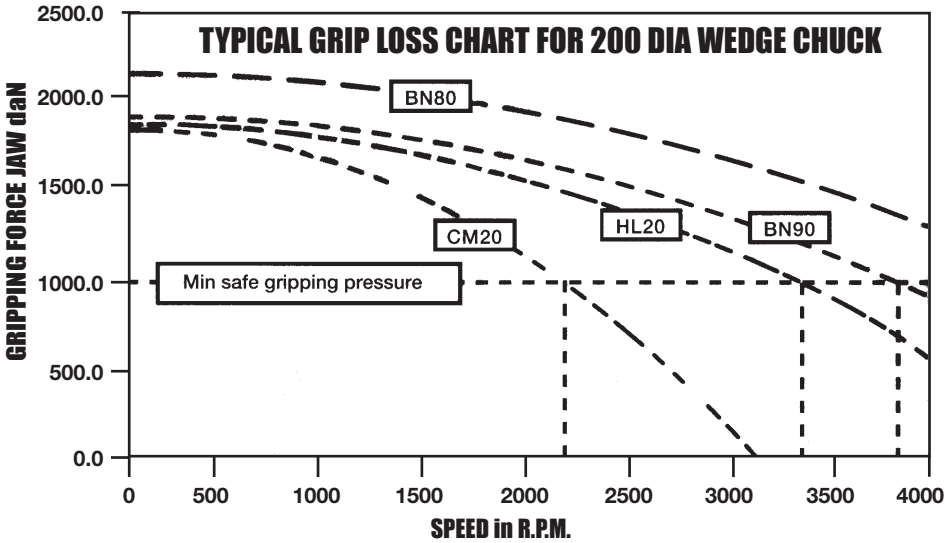

Jaw Code	Jaw Type	Jaw Material	Weight per Jaw
BN80	Std. Soft Jaw	Mild Steel	0.93 Kg
BN90	Tall Soft Jaw	Mild Steel	1.23 Kg
CM20	Diamond Jaw	Mild Steel	4.66 Kg
HL20	Diamond Jaw	Aluminum	1.66 Kg

Conversion Factors: 1KN = 100daN 1kgf = 9.806 N

Typical Gripping forces (for external gripping) can be calculated using the following formula

For drawtube/bar operated chucks: $G_f = S_f F_o / (1 + J_h G_h) - G_i S^2 (MR+B_j)$

For pneumatically operated chucks: $G_f = S_f P_o / (1 + J_h G_h) - G_i S^2 (MR+B_j)$

Where G_f = Chuck Gripping Force (daN)
F_o = Operating Force of drawtube actuated chucks in daN
P_o = Operating Pressure of pneumatically actuated chucks in bar
S = Speed of chuck in thousandths of R.P.M. (ie. 6000 R.P.M. = 6)
M = Mass of top jaw in Kg
R = Radius of grip in cm
G_h = Height of top jaw in cm

Note: For internal gripping the centrifugal force is additive, the minus sign in the above formula therefore becomes a plus sign.

AND S_f, G_i, B_j, J_h, & P_f, are constant values associated with specific chuck types and typical values are found in tables A, B & C below.

Table A
For standard wedge type chucks

Chuck Size	160	200	250	305	380
S_f	0.80	0.80	0.80	0.80	0.80
G_i	7.5	7.5	7.5	7.5	7.5
B_j	2.3	5.2	8.9	15.9	34.0
J_h	0.08	0.06	0.05	0.04	0.03

Table B
For Compensating chucks

Chuck Size	160	200	250	305	380
S_f	0.75	0.77	0.91	0.91	0.80
G_i	8.0	8.0	8.0	8.0	8.0
B_j	-1.5	-4.2	-6.0	-11.5	-22.0
J_h	0.08	0.06	0.05	0.04	0.03

Table C
For Pneumatic chucks

Chuck Size	160	200	250	305	380
P_f	173	256	380	462	473
G_i	6.2	6.2	6.2	6.2	6.2
B_j	2.8	5.3	10.2	15.9	19.6
J_h	0.075	0.070	0.055	0.040	0.045

Note: These charts are typical examples only and should not be applied without consultation with chuck manufacturer or chuck manual.

TECHLEADER® TOOLING INC.

Application Flowchart for Selection of TECHLEADER Top Jaws for Power Chucks

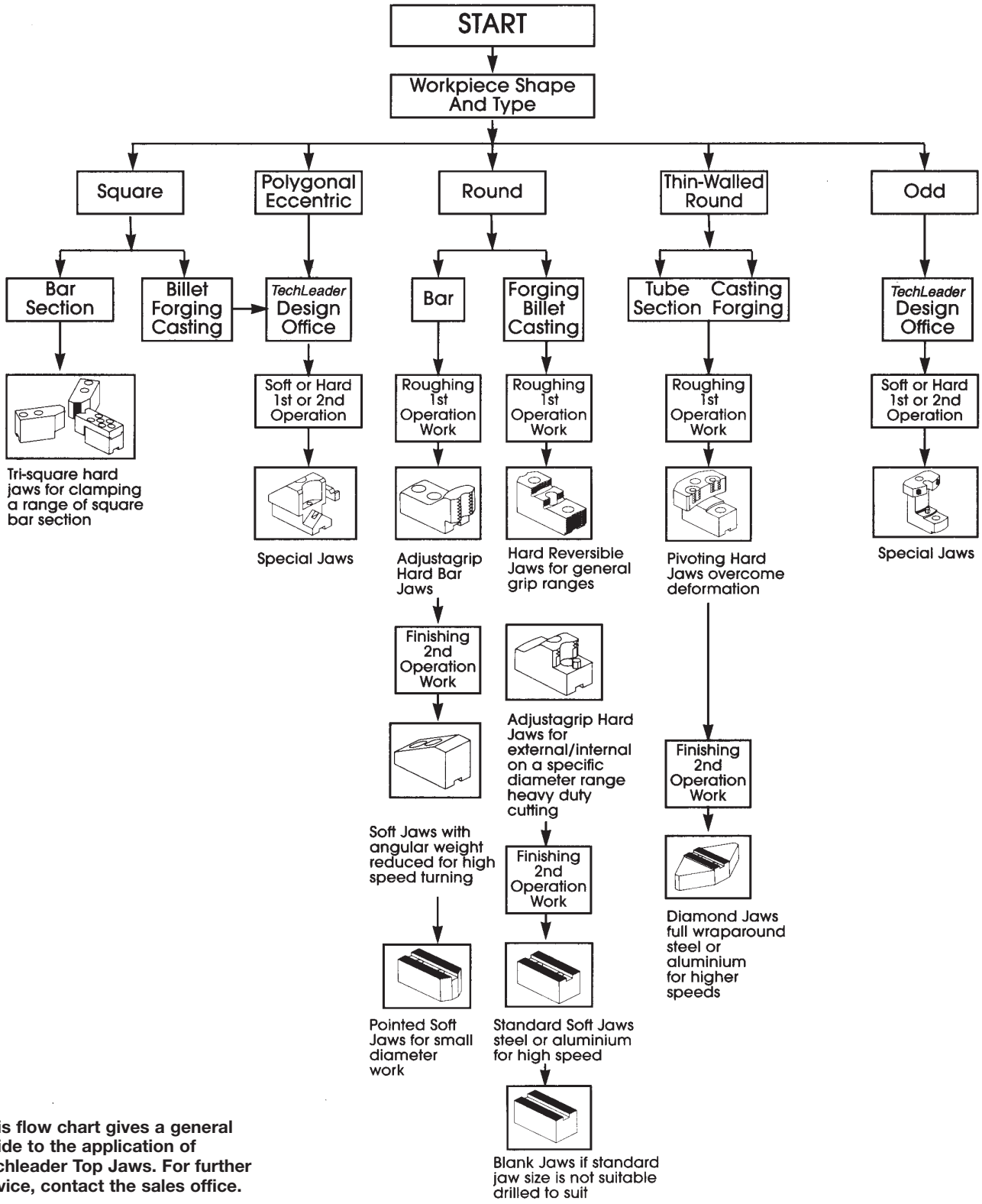

This flow chart gives a general guide to the application of Techleader Top Jaws. For further advice, contact the sales office.

TECHLEADER® TOOLING INC.

Serrated Soft Top Jaws

To Suit Hardinge, Howa, Kitagawa, Matsumoto, Pratt Burnerd, Röhm, Schunk & SMW-Autoblok Power Chucks

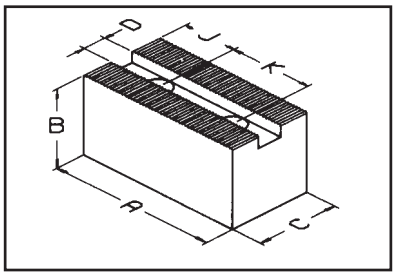

TYPE A

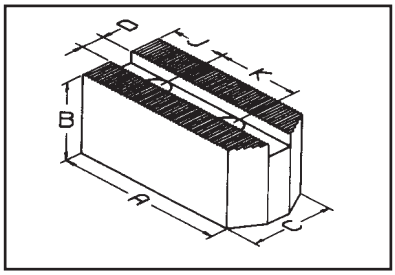

TYPE B

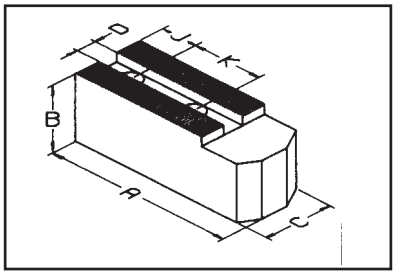

TYPE C

1.5m x 60˚ Serrations

Material: 080M15 (En32)
Black Finish

Techleader Part No.	A	B	C	D	K + J Bolt	Serrations	Type	Weight Kg/Set
BO 04	48	25	20	8	15 + 8 M6	1.5 mm x 60˚	A	0.5
BR 05	55	25	25	10	14 + 10 M8	1.5 mm x 60˚	B	0.5
BB 05	55	40	25				B	
DK 05	55	50	25				A	1.1
BH 05	55	60	25				B	
BO 05	57	35	25	10	18 + 10 M8	1.5 mm x 60˚	B	0.8
DJ 05	57	50	25	10			A	1.3
CK 05	62	25	25	10	19 + 8 M8	1.5 mm x 60˚	B	0.9
DU 05	48	25	25	11	16 + 9.5 M8	1.5 mm x 60˚	A	0.7
CK 06	80	35	30	11	25 + 14 M8	1.5 mm x 60˚	C	1.4
BO 06	72	38	30	12	20 + 15 M10	1.5 mm x 60˚	A	1.6
BB 06	72	40	30				A	
BC 06	72	50	30				A	3.5
DJ 06	72	60	30				A	1.3
PT 06	82	32	30				B	
BP 06	72	38	32	12	20 + 15 M10	3 mm x 60˚	A	1.6
BO 08	95	44	35	14	25 + 25 M12	1.5 mm x 60˚	A	2.7
BB 08	95	50	35					
DJ 08	95	80	35		25 + 25 M12		A	4.0
					25 + 20 M12		C	2.2
CK 09	95	44	32	14			C	2.7
PT 08	102	40	35				B	2.9
BP 08	95	44	32	14	25 + 25 M12	3 mm x 60˚	A	2.7
DU 08	85	40	40	16	25 + 20 M12	1.5 mm x 60˚	A	2.8
DU 09	85	60	40				A	4.0
BO 10	110	40	40	16	30 + 30 M12	1.5 mm x 60˚	A	3.4
BO 10L	4.5”	2”	1.50”				A	5.0
DJ 10	110	80	40				A	6.5
BD 10	110	100	40				A	
PT 10	125	40	40				B	4.5
				16	30 + 21 M12			4.2
DK11	110	60	40				C	5.2
BP 10	110	40	40	16	30 + 30 M12	3 mm x 60˚	A	3.4

TECHLEADER® TOOLING INC.

Serrated Soft Top Jaws

To Suit Hardinge, Howa, Kitagawa, Matsumoto, Pratt Burnerd, Röhm, Schunk & SMW-Autoblok Power Chucks

CHUCK Ø	HARDINGE	HOWA	KITAGAWA	MATSUMOTO (MMK)	PRATT BURNERD	RöHM	SAMCHULLY	SCHUNK AUTOBLOK	SMW
110			B-04 HOB-4						
105 110 135	4" SURE-GRIP 5" SURE-GRIP	HO1MA4 HO24M5	B204 AS110 N-04 HJ-4 B205	H-4-21		KFD-HE 130 KFN 105	H505		
135			HOB-5 B-05						
135		HO1MA5	HJA-4 N-05	HXA5-6-34 HHXA 5-6 SA 5-6-40					
110 135		HO27M4 HO27M5							
165				HA5-6 HH-6 HX-6 HJ-6 H-6 STC-6 ZA-5-6					
165 170 210	6" SURE-GRIP	HO7MA6 HO15MA6 HO22M6 HO24M6 HO27M6 HO37M6 HO47M6 HO23M8	HJA5-6 N-06 AS-165 B206 B-160 HO-6 B-06 NL-06 HOH-160 BT206 HOH-06 HOH206 N-160 B-07,BB06 BL206 B-106 HOS-6 HG738 165 HOB-6		INTERNATIONAL 9821-31723 9821-21723 HIGH SPEED QUICK CHANGE 9121-21723 9121-31723	KFD-HE 170	HC06 HS06 HST06 HH-206	ROTA NCK 165 HSL 165 ROTA NC165 ROTA NCF 165	BBM 175
165		HO1MA6							
210	8" SURE-GRIP	HO7MA8 HO15M8	B200 B208 B-08 HOB-8 N-200 HOH-200 AS-210 NL-08 HOS-8 BT208 HJA6-8 HOH208 HO-8 HOH108 B-108 BB-08 HOH-8 BL208 N-08 NL200 HG715-210	HA6-8 HX-8 H-8 HJ-8 HHJ-8 STC-8 ZA6-8-52 ZA6-8-66 N-08	INTERNATIONAL 9821-32123 9821-42123 9827-TORNADO HIGH SPEED QUICK CHANGE 9121-32123 9121-42123	KDF-HE 210 210 KB	HC08 HS08 HST08 HH208 HHF208 HSF08	ROTA NCK 210 HSL 210 ROTA NC210 ROTA NCF 210	BBM 210
210		HO1MA8							
210 254		HO27M8 HO47M8 HO24M8 HO22M8 HO37M8 HO7MA10 HO23M10 HO15M10							
250 254 265	10" SURE-GRIP		B250 B-10 HOH-250 HOH-10 B210 HOB-10 AS-250 N-250 N-10 HJA6-10 HJA8-10 HOS-10 HO-10 NL-10 BT210 B-110 UVE-K200 HOH110 UVE-K250 HOH210 BL210 HG730-254	HA6-10 HA8-10 ZA6-10-75 H-10 HX-10 HHL-10 HH-10 HHJ-10 HJ-10 HA8-11 STC-10	INTERNATIONAL 9821-42623 9821-52623 9827-TORNADO HIGH SPEED QUICK CHANGE 9121-42623 9121-52623 265 KB	KFD-HE 254	HC10 HS10 HST10 HSF10	ROTA NCK 250 HSL 250 ROTA NC 250 ROTA NCF 250	BBM 250
254		HO1MA10							

TECHLEADER® TOOLING INC.

Serrated Soft Top Jaws

To Suit Howa, Kitagawa, Matsumoto, Pratt Burnerd, Röhm, Schunk & SMW-Autoblok Power Chucks

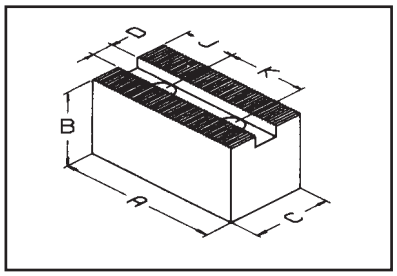

TYPE A

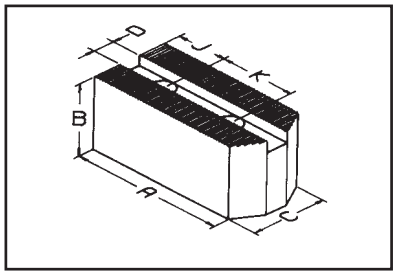

TYPE B

60° Serrations

Material: 080M15 (En32)
Black Finnish

Techleader Part No.	A	B	C	D	K + J Bolt	Serrations	Type	Weight Kg/Set
DU 10	105	40	40	18	30 + 24 M14	1.5 mm x 60°	A	4.4
DU 11	105	60	40				A	6.6
BO 12	130	50	50	18	30 + 40 M14	1.5 mm x 60°	A	6.8
DJ 12	130	80	50				A	10.9
DJ 14	130	100	50				A	13.6
PT 12	145	50	50				B	7.3
BP 12	130	50	50	18	30 + 40 M14	3 mm x 60°	A	6.8
BR 13	130	50	50	21	30 + 40 M16	1.5 mm x 60°	A	6.5
DJ 13	130	80	50				A	
BD 13	130	100	50				A	11.0
PT 13	145	50	50				B	7.3
DU12	111	65	50	21	35 + 25 M16	1.5 mm x 60°	A	7.1
BO 15	165	76	64	22	43 + 37 M20	1.5 mm x 60°	A	15.2
DJ 15	165	127	64				A	25.0
BR 15	135	60	50	25.5	43 + 26 M20	1.5 mm x 60°	A	8.2
CK 15	150	76	64	22	50 + 30 M20	3 mm x 60°	A	13.8
BO 18	180	76	64	25	60 + 40 M20	3 mm x 60°	A	16.5
DJ 18	180	127	64					29.0
BO 24	210	102	76	25	80 + 40 M20	3 mm x 60°	A	32.3

TECHLEADER® TOOLING INC.

Serrated Soft Top Jaws

To Suit Howa, Kitagawa, Matsumoto, Pratt Burnerd, Röhm, Schunk & SMW-Autoblok Power Chucks

CHUCK Ø	HOWA	KITAGAWA	MATSUMOTO (MMK)	PRATT BURNERD	RÖHM	SAMCHULLY	SCHUNK AUTOBLOK	SMW
254 304	HO22M10 HO37M10 HO24M10 HO27M10 HO47M10 HO7MA12 HO23M12 HO15M12							
304 305 381		B300 B-12 HOH-300 HOH-12 N-300 N-12 HOS-12 HO-12 HJA8-12 HOB-12 HJA6-12 HLA6-12 NL-12 HLA8-15 HLA6-15	HA8-12 HX-12 H-12 SH-12 HH-12 HHL-12 HJ-12 HHJ-12 ZA8-12-78 ZA8-12-85	INTERNATIONAL 9821-53123 9821-63123 9827-TORNADO HIGH SPEED QC 9121-53123 9121-63123 305KB		HC12 HCF12	HSL 315 ROTA NCK 315 ROTA NC 315 ROTA NCF 315	
304	HO1MA12							
304 315		B212 BT212 BL212			KFD-HE315	HS12 HST12 HH212 HSF12		BBM 315
304	HO27M12 HO37M12							
380 450		B380 B-15 HOH-380 HOB-15 HOH-15 B-450 B-18 HOB-18		INTERNATIONAL 9821-53823 9821-63823 HIGH SPEED QC 9121-53823 9121-63823		HAH15 HCHF15 HC15 HCF15 HAH18 HCHF18 HC18	ROTA NC 400 ROTA NCF 400	
380		B215, N15, N18						
380 450 450			HA11-15 HHL-15 H-15 HH-15 HA11-18 H-18 HH-18 ZA-15-120				HSL 400	
454 530 610		HJ-450 HJ18 B-530 B-21 HJ-530 HJ-21 HOB-21 N21 B-600 B-24 HJ-610 HJ24 N24 HOB24 UVE-LB500/630				HAH21 HAH24 HC21 HC24 HCHF21 HCHF24		
610		HOB24 HJA24 HJ24 UVE-LB800						

TECHLEADER® TOOLING INC.

Serrated Top Jaw and Chuck Data Sheet

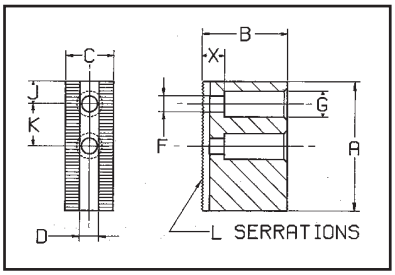

		2 JAW CHUCK DATA	3 JAW CHUCK DATA	REMARKS
Chuck Manufacturer / Model No.				
Chuck Ø / Type	ø1			
Maximum Swing Ø	ø2			
Chuck Bore Ø	ø3			
Base Jaw Width	C1			
T-Nut Minimum Position	Tmin			
T-Nut Maximum Position	Tmax			
T-Nuts Minimum Hole Pitch	Pmin			
Are Base Jaw Serrations Above Chuck Face	Yes No			
Are T-Nuts Single or Double	Single Double			
Slot Width	D			
Hole Center Spacing	K			
Hole Center To Back of Jaw	J			
Counterbore / Hole Ø	G/F			
Depth Under Bolt Head	X			
Serration Pitch & Angle	L			
Length Of Jaw	A			
Height Of Jaw	B			
Width Of Jaw	C			

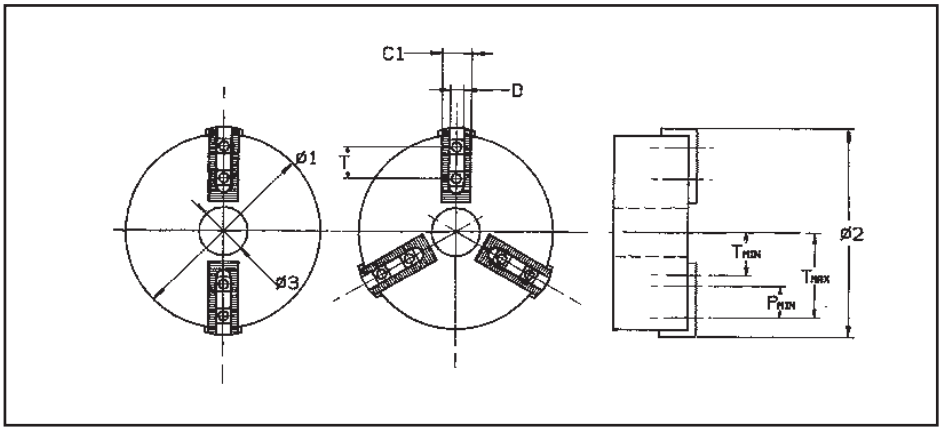

TECHLEADER® TOOLING INC.

Serrated Soft Top Jaws

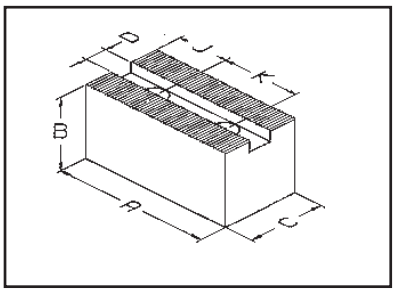

90˚ Serrations

Material: 080M15 (En32)
Black Finish

To suit Berg KH power chucks

Techleader Part No.	A	B	C	D	K + J Bolt	Serrations	Weight Kg/Set	Berg Chuck Type
CS 14	55	35	22	8	14 +-11 M8	1/16" X90˚	0.7	KH 110
CS 16	70	45	25	10	20 +-15 M10	1/16" X90˚	1.4	KH 140-36 / KH 140-45 / KH 160
CS 18	80	57	32	12	21 +-15 M12	1/16" X90˚	3.6	KH 175-56 / KH 200-68
CS 20	90	57	32	12	21 +-15 M12	1/16" X90˚	3.8	KH 175-56 / KH 200-68
CS 25	111	60	40	16	29 +-18 M16	1/16" X90˚	4.7	KH 250-91/ KH 315-117
CS 40	150	80	50	20	38 +-31 M20	3/32"X90˚	8.4	KH 400 / KH 500 / KH 630

To suit Schunk & SMW-Autoblok pneumatic power chucks

Techleader Part No.	A	B	C	D	K+J Bolt	Serrations	Weight Kg/Set	Chuck Type	
								SMW-Autoblok	Schunk
CO 13	68	40	30	11	18 +21 M8	1/16" X90˚	1.6	SP 125 / STP 125 / STWP 125	TP 125
CO 16	88	51	32	14	25+25 M10	1/16" X90˚	2.9	SP 160 / STP 160 / STWP 160	TP 160
CO 20	98	50	40	17	29+25 M12	1/16" X90˚	4.0	SP 200 / STP 200 / LP 205 / STWP 200	TP 200
CO 25	108	70	50	21	30+28 M14*	1/16" X90˚	8.0	SP 250 / STP 250 / LP 250 / STWP 250 SP 315 / STP 315 / LP 305	TP 250 / STWP 315
CO 32	120	70	50	21	30+28 M14*	1/16" X90˚	10.1	SP 315 / STP 315 / LP 305 / STWP 315	TP 315
CO 35	132	70	50	21	30+28 M14*	1/16" X90˚	11.5	SP 315 / STP 315 / STWP 315	

* Please note, for 250mm Chucks upwards after mid 1997 bolt sizes changed to M16. Please specify.

To suit Schunk & SMW-Autoblok big bore power chucks

Techleader Part No.	A	B	C	D	K+J Bolt	Serrations	Weight Kg/Set	Chuck Type	
								SMW-Autoblok	Schunk
CP 40	158	76	64	25.5	40+35 M18*	3/32" X90˚	15.0	BB400 / BB400-ES / STP 400/ LP 380-460	TB 400
CP 50	185	76	64	25.5	40+35 M18*	3/32" X90˚	18.0	BB500 / BB500-ES / BB630-ES265 STP 500 / LP 500	TB 500
CP 63	240	102	76	30	64+40 M24	3/32" X90˚	35.0	BB630 / BB630-ES-ES325 / STP 630	TB 630
CP 80	300	102	76	30	64+40 M24	3/32" X90˚	43.0	BB800 / BB1000 / STP 800	TB 800 TB 1000

* Please note, after mid 1997 M18 bolt sizes change to M20. Please specify.

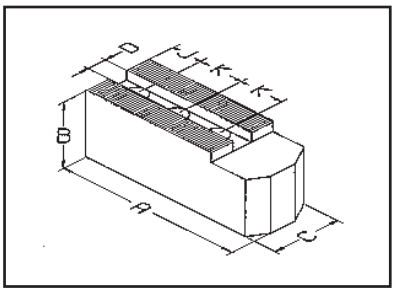

90˚ Serrations
Material: 080M15 (En32)
Black Finish

To suit Gamet power chucks

Techleader Part No.	A	B	C	D	K + J Bolt	Serrations	Weight Kg/Set	Gamet Chuck Type
BU 06	77	35	30	11	20 +-9 M8	1/16" X90˚	1.3	160 N / 160 MO / 160 GP
BU 08	102	44	32	14	22 +-10 M10	1/16" X90˚	2.6	215 N / 215 MO / 215 GP
BU 11	130	51	44	20	30 +-13 M12	1/16" X90˚	5.4	250/280 N / 280 MO / 280 GP
BU 14	170	65	50	21	40 +-22 M16	1/16" X90˚	10.0	350 N / 350 MO / 350GP

TECHLEADER® TOOLING INC.

Serrated Soft Top Jaws

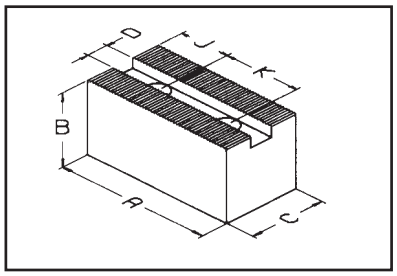

TYPE A

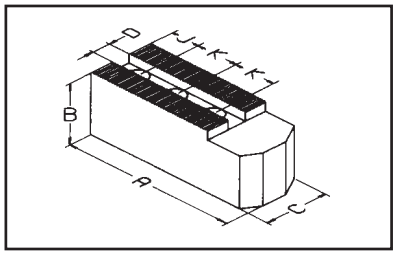

TYPE B

60° Serrations

Material: 080M15 (En32)
Black Finish

To suit Gamet, Nikko and Röhm Power Chucks

Techleader Part No.	A	B	C	D	K + J Bolt	SERRATIONS	TYPE	WEIGHT KG/set	GAMET	NIKKO	RÖHM
DL10	53	30	20	10	15+9 M8	1.5 x 60°	A	0.6	105 N 105 MO	HF-4	KFD-HE 130 KFN 105
DL 16 BT06	67 77	40 35	30 30	11	20+17 M8 20+9 M8	1.5 x 60°	A B	1.6 1.3	140 DE 160 GO 160 N 170 MF 160 MO 130 N 130 MO	GO-6 HDM-165 HF-6AB D-170 HG-6AB MO 6	KFN 160 KFM 160 KFG 160 KFE 170
DL 22 BT 08	89 102	57 44	32 32	14	26+18 M10 22+10 M10	1.5 x 60°	A B	3.1 2.6	170 DE 215 MF 215 N 215 MO 215 GO	GO-8 MO-8 HF-8 MAC 165 HG-8 HDM 215	KFN 215 KFM 215 KFG 215 KFE 215
DL 28 BT 10 BT 11	89 117 130	57 51 51	44 44 44	20	26+18 M12 30+13 M12 30+13 M12	1.5 x 60°	A B B	4.1 4.9 5.4	250 N 280 N 280 MO 280 GO 280 MF	GO-10 HDM 250 GO-12 HDM 300 HF-10 MO-10 HF-12 MO-12 HG-10	KFN 250/280 KFM 280 KFG 280 KFE 280
DL 35 BT 14	120 170	80 65	50 50	21	28+25 M16 40+22 M16	1.5 x 60°	A B	9.4 10.0	350 N 350 MO 350 GO 350 MF	HF-14 MAC 250 HF-16 MAC 315 HDM 250 MO-14 HDM 380	KFN 350 KFM 350 KFG 350 KFE 350

Pointed or Weight Reduced Soft Jaws

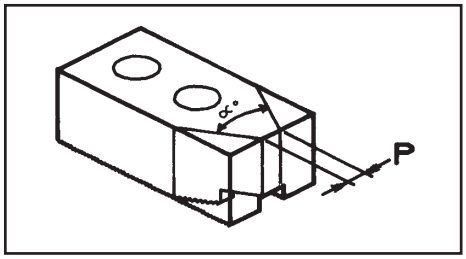

A. Pointed 60° or 120° Inclusive oc°

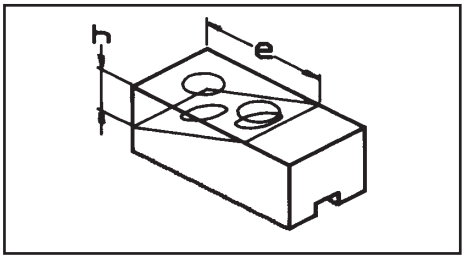

B. Rectangular Weight Reduced

Any standard soft jaw can be pointed or weight reduced, please give the following information:
1. Quantity of sets required. **2.** Techleader Part No. **3.** Modification required. **4.** Relevant dimensions.

Conversion Plates

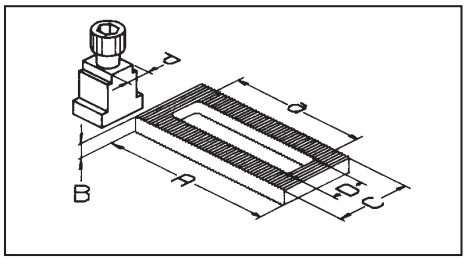

A. Serration to Serration

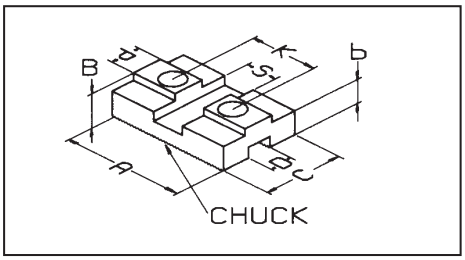

B. Serration to Slot/Tenon

Allows different top jaws to be used with base jaws of another configuration. Please contact our sales office for a quotation.

TECHLEADER® TOOLING INC.

Serrated Soft Top Jaws

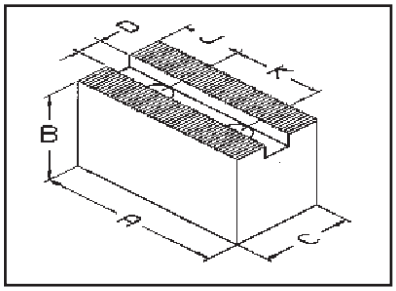

90˚ Serrations

Material: 080M15 (En32)
Black Finish

To suit SMW-Autoblok large & extra large open Center power chucks

Techleader Part No.	A	B	C	D	K + J Bolt	Serrations	Weight Kg/Set	Autoblok Chuck Type Pratt
CL 12	60	32	32	12	16 +-15 M8	1/16" X90˚	1.0	130 BHD 140 BBD 125 ALD 125AND
CH 17	70	38	32	14	16.5+16 M10	1/16" X90˚	1.3	165 BHD, BHD/FC 175BBD RCD 165 165 ALD 165 AND
CH 21	90	40	40	17	23 +-20 M12	1/16" X90˚	2.8	210 BHD, BHD/FC 210 BBD RCD 210 210 ALD 210 AND
CH 25	110	44	44	21	30 +-20 M16	1/16" X90˚	3.8	250 BHD, BHD/FC 250 BBD RCD 250 250 ALD 250 AND
CH 32	125	50	50	21	30 +-20 M16	1/16" X90˚	5.5	315 BHD, BND/FC 315 BBD RCD 315 315 ALD 315 AND

To suit Pratt Burnerd closed/open Center wedge power chucks

Techleader Part No.	A	B	C	D	K+J Bolt	Serrations	Weight Kg/Set	Pratt Chuck Type
BJ 16	62	32	25	12.7	17.5+14 M8	1/16" X90˚	1.2	160 TYPES 1160-/ 1140-/ 1141-/ 1180-
BJ 20	71	44	32	14.3	20.6+16 M10	1/16" X90˚	2.1	200 TYPES 1160-/ 1140-/ 1141-/ 1180-
BJ 25	83	50	40	15.9	23.8+17 M12	1/16" X90˚	3.0	250 TYPES 1160-/ 1140-/ 1141-/ 1180-
BJ 32	108	57	44	17.4	31.8+24 M14	1/16" X90˚	5.2	315 TYPES 1160-/ 1140-/ 1141-/ 1180-
BJ 40	124	65	50	20.6	38.1+24 M16	1/16" X90˚	8.3	400 TYPES 1160-/ 1140-/ 1141-/ 1180-
BJ 50	146	80	50	25.4	44.5+29 M20	3/32" X90˚	12.6	500/630 TYPES 1160-/1140-/1141-/1180-

To suit Pratt Burnerd constant grip power chucks

Techleader Part No.	A	B	C	D	K + J Bolt	Serrations	Weight Kg/Set	Pratt Chuck Type
BL 16	50	38	32	15	20.6-+11 M10	1/16" X90˚	1.0	160 TYPES 1770-/ 1771-/ 1772-
BL 20	64	40	40	17	25.4-+13 M12	1/16" X90˚	1.6	200 TYPES 1770-/ 1771-/ 1772-
BL 25	80	50	40	17	25.4-+13 M12	1/16" X90˚	2.8	250 TYPES 1770-/ 1771-/ 1772-
BL 32	105	57	44	21	31.8-+17 M16	1/16" X90˚	5.0	315 TYPES 1770-/ 1771-/ 1772-
BL 40	124	65	50	21	31.8-+17 M16	3/32"X90˚	8.4	380 TYPES 1770-/ 1771-/ 1772-

To suit Pratt Burnerd self contained (up to 89) power chucks

Techleader Part No.	A	B	C	D	K + J Bolt	Serrations	Weight Kg/Set	Pratt Chuck Type
BK 16	62	40	25	13	18-+14 M8	1/16" X90˚	1.1	160 TYPES 1740-/1730-/1742-/1744-/ 1157-
BK 20	76	44	32	17	22-+16 M10	1/16" X90˚	2.2	200TYPES 1740-/1730-/1742-/1744-/ 1157-
BK 25	89	60	40	21	25-+19 M12	1/16" X90˚	3.7	250 TYPES 1740-/1730-/1742-/1744-/ 1157-
BK 32	105	60	40	21	30-+22 M12	1/16" X90˚	4.5	315 TYPES 1740-/1730-/1742-/1744-/ 1157-

TECHLEADER® TOOLING INC.

Serrated Soft Top Jaws

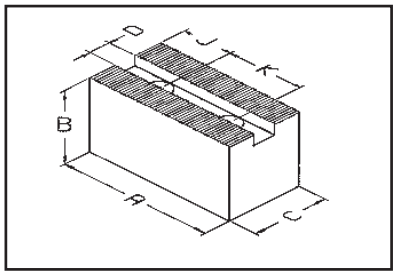

TYPE A

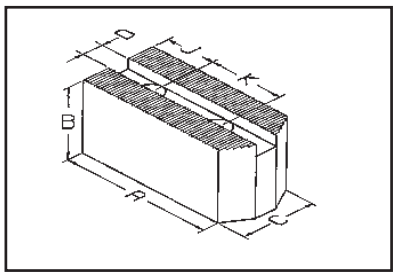

TYPE B

90˚ Serrations

Material: 080M15 (En32)
Black Finish

Techleader Part No.	A	B	C	D	K + J Bolt	Serrations	Type	Weight Kg/Set
BV 13	52	25	25	12	14 + 8 M8	1/16 x 90˚	A	1.0
RD 13	55	38	32	12	16 + 10 M8	1/16 x 90˚	A	1.2
CL12	60	32	32		16 + 15 M8		A	1.0
BV 16	72	38	32	12	20 + 10 M10	1/16 x 90˚	A	1.4
CL 17	80	38	32	14	20 + 19 M10	1/16 x 90˚	A	2.2
BM 16	65	40	40	17	22 + 15 M12	1/16 x 90˚	A	1.3
BN 70	70	60	40				A	2.7
BN 75	80	40	40				B	2.5
BL 20	64	40	40	17	25.4 + 13 M12	1/16 x 90˚	A	1.6
BL 25	80	50	40				A	2.8
BN 80	90	40	40		22 + 15 M12		A	2.8
BN 85	90	40	40				B	2.7
BN 90	90	60	40				A	3.7
BL 32	105	57	44	21	31.8 + 16 M16	1/16 x 90˚	A	5.0
BM 32	116	65	50				A	7.6
BN 10	120	50	50		28 + 20 M16		A	5.4
BN 11	120	50	50				B	5.3
BN 12	120	80	50		28 + 20 M16		A	9.4
BN 14	140	50	50				A	6.3
BN 15	140	50	50				B	6.2
BN 13	140	89	64	25.5	35 + 30 M20	1/16 x 90˚	A	15.0
BM 40	152	76	64	25.5	44.5 + 20 M20	3/32 x 90˚	A	14.3
BN 23	155	89	64		35 + 30 M20		A	17.4
BJ 50	146	80	50	25.4	44.5 + 29 M20	3/32 x 90˚	A	12.6
CL 50	160	76	64	28	38 + 25 M20	3/32 x 90˚	A	14.5

TECHLEADER® TOOLING INC.

Serrated Soft Top Jaws

To suit Autoblok, Forkardt, Gamet, Pratt Burnerd, Röhm, Schunk, SMW-Autoblok & SMW Power Chucks

AUTOBLOK & SMW-AUTOBLOK	FORKARDT	GAMET	PRATT BURNERD	ROHM	SCHUNK	SMW
			125 INTERNATIONAL 150 KB INTERNATIONAL			
IND 125 AND 125 ALD 125 GHDN 125	KTH 130/140		170 KB INTERNATIONAL	KFD 130 KFH 140	HSG 160-46	KDV 130 KMA 140 KMAF 140
			135 HYD, FRONT END 165 INTERNATIONAL 165 HIGH SPEED Q.C.			
IDN 170, HDB 170 IDL 170 HDN 170 GHDN 165 GHD/FC 165 AND 165, ALD 165		MAC 165/170 DE 170 GA 160/170			TP 160	SP 160
IDN 200/220 IDL 200 HDN 200/220 HDL 200 GHDN 210 CD 200 GHD/FC 210 HDB 220 AND 210 ALD 210	3KGH 160/175/200 KTG 160/200 KTN 160/200 3KGHF 160/175/200 KS 160/200/250 KL 160/200 KSPS 160/200 KSF 175/200 3KTGF 200 KSHF 200 UVE 160/200/250 KP 200 KG 200 3NHF 200 3NH 200 KSH 160/200 KLNC 200 KT 160/200 KTF 200 KTH 200/250/315 QLC 175	MAC 200 MAC 220 DE 210 GA 210	160 INTERNATIONAL (UP TO 89) 160 HIGH SPEED Q.C. (UP TO 89) 165 HYD, FRONT END 210 INTERNATIONAL 210 HIGH SPEED Q.C. 210 KB INTERNATIONAL 210 KB HIGH SPEED Q.C.	KFH 160/200 KFH-NC 160/200 KFH-F 160/200 KFH-G 160/200 KFD-HF 160/200 KFD-HE 160/200 KFD-HS 200 KFD 160/200 SPD 160/200 SPO 160/215 KFD-AF 160	THF 165-37 TH 165-37 HGS 200-66 HSL 165-37 ROTA NC 165 ROTA NCF 160 ROTA NCO 165	HFKS 160/200 KDV 160/200/250 KDVG 160/200/250 KDM 160/200 KDMF 160/200/250 KMA 160/200/250 KMAF 160/200/250 KFV 160/200 SP 200 KFMF 160/200 HFK 160/200
IDN 200/220 IDL 200 HDN 200/220 HDL 200 GHDN 210 CD 200 GHD/FC 210 HDB 220 AND 210 ALD 210	3KGH 200 KTG 200 3KGHF 200 KTN 200 KS 200/250 KSH 200 KL 200 KSF 200 3KTGF 200 KSHF 200 UVE 200/250 KG 200 KSPS 200 3NHF 200 KSHF 250-55 (INDEX) 3NH200 3NHF 250-65 (INDEX) 3NHF 290-104 (INDEX) KL 250 MO KS 250 MO KLNC 200 KP 200 KT 200 KTH 200/250/315 QLC 210	MAC 200 MAC 220 DE 210 GA 210	200 INTERNATIONAL (UP TO 89) 200 HIGH SPEED Q.C. (UP TO 89) 210 HYD, FRONT END 250 HIGH SPEED Q.C. (UP TO 89) 254 INTERNATIONAL 265 HIGH SPEED Q.C. 265 KB INTERNATIONAL 265 KB HIGH SPEED Q.C.	KFH 200 KFH-NC 200 KFH-F 200 KFH-G-200 KFH-HF 200 KFD-HE-200 KFD-HS 250 KFD-AF 200 SPO 215 SPD 215 KFD 200/250	THF 210-52 TH 210-52 HSG 250-91 HSL 210-52 ROTA NC 210 ROTA NCD 210 ROTA NCF 200 ROTA NCO 200 TP 200	HFKS 200 KDV 200/250 KDVG 200/250 KDM 200 KDM-F 200/250 KMA 200/250 KMA-F 200/250 KFV 200 KFMF 200 HFK 200
IDN 250/315/400 IDL 250/315/400 HDN 250/315/400 HDL 250/315/400 GHDN 250/315/400 CD 250/315 GHD/FC 250/305/400 HDB 300 AND 250 ALD 250 AND 315 ALD 315	KS 315/400 KSH 250/315/400 KG 250/315 KP 250/315 3KTGF 250/315 KT 250/315 UVE 315 KSHF 250/315/400 KTG 250/315 KLNC 250/315 KTN 250/315 KTF 250/315 3NHF 250/315 3NH 250/315 3NHF 290 3NHF 400 (INDEX) KL 250 KSPS 250/300 QLC 250/315	MAC 250 MAC 315 DE 250/260/320 GA 250/315	250 INTERNATIONAL (UP TO 89) 254 HYD, FRONT END 305 HYD, FRONT END 305 INTERNATIONAL 305 HIGH SPEED Q.C. 315 INTERNATIONAL (UP TO 89) 400 HIGH SPEED Q.C. (UP TO 89) 305 KB INTERNATIONAL 305 KB HIGH SPEED Q.C.	KFH 250/315 KFH-NC 250/315 KFH-F 250/315 KFH-G 250/315 KFH HF 250/315 KFD 250/315 KFD-HF 250/315 KFD-HE 250/315 KFD-HS 315 KFD-AF 250/315 LVE 305 SPO 300 SPD 300	THF 250-71 TH 250-71 THF 315-86 TH 315-86 HSG 315-108 HSL 250-71 HSL 315-91 ROTA NC 250/ 315 ROTA NCD 250/ 315 ROTA NCF 250/ 315 ROTA NCO 250/ 315 TP 250/315	HFK 250/315 HFKS 250/315 KDV 315/400 KDVG 315/400 KDM 250/315/400 KDM-F 315/400 KMA 315/400 KMA-F 315
	KL 300 KSHF 560	MAC 380				
IDN 500/630/800 IDL 500/630/800 GHDN 500/610/640/800 ALD 400 AND 400	KS 500/620 KSH 500 KSL 630 KSHF 630 3KTFG 400/500 UVE 400/500/630/800 KTG 400/500 KTN 400/500 KG 400/500 3NHF 400/500/630 3NH 400/500/630 KL 400/500 KLNC 400/500 KP 400 KT 400/800 KTF 400/500 QLC 400	DE 400	400 INTERNATIONAL (UP TO 89) 400 HYD, FRONT END 500 HYD, FRONT END	KFH 400/500 KFH-F 400/500 KFH-G 400/500 KFH-NC 400/500 KFD 400/500/630/800 KFD-H 400/500 KFD-HF 400/500 KFD-HS 400/500 LVE 400/500/630/1000 KFL 500/630	THF 400-120 TH 400-120 THF 500-160 TH 500-160 TH 630-180 HSG 400-176 HSG 500-165 HSL 400-120 ROTA NC 400 ROTA NCD 400 ROTA NCF 400 ROTA NCO 400	HFK 400/500 HFKS 400/500 KDV 500 KDVG 500 KDM 500 KFV 400/500/630/800
			380 INTERNATIONAL 380 HIGH SPEED Q.C.			
IDN 500/630/800 IDL 500/630/800 GHDN 500/610/640/800 HDL 500/630/800 HDW/FC 500/630						

TECHLEADER® TOOLING INC.

Serrated Diamond Soft Top Jaws

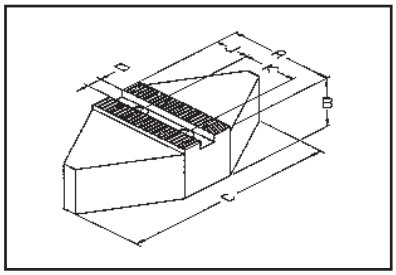

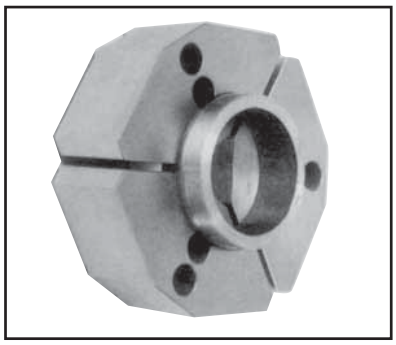

90˚ Serrations

Material: 080M15 (En32)
Material: Aluminum HE30TF
Black Finish

Techleader Part No.	A	B	C	D	K + J Bolt	Serrations	Weight Kg/Set
CM 16 STEEL	60	60	120	17	22 + 15 M12	1/16 X 90˚	9.0
HL 16 ALUMINUM	64	64	120				3.2
CM 20 STEEL	76	64	150	17	22 + 15 M12	1/16 X 90˚	14.0
HL 20 ALUMINUM	76	64	150				5.0
CM 25 STEEL	89	64	170	17	22 + 20 M12	1/16 X 90˚	20.0
HL 25 ALUMINUM	89	64	170				7.0
CM 26 STEEL	89	64	170	21	28 + 20 M16	1/16 X 90˚	20.0
HL 26 ALUMINUM	89	64	170				7.0
CM 32 STEEL	118	76	240	21	28 + 30 M16	1/16 X 90˚	28.0
HL 32 ALUMINUM	118	76	240				10.0
CM 40 STEEL	152	76	280	25.5	M20		
HL 40 ALUMINUM	152	76	280				

TECHLEADER® TOOLING INC.

Serrated Diamond Soft Top Jaws

To suit Autobok, Forkardt, Gamet, Pratt Burnerd, Röhm, Schunk, SMW-Autoblok & SMW power chucks

AUTOBLOK	FORKARDT	GAMET	PRATT BURNERD	ROHM	SCHUNK	SMW
	3KGH 160/175 KL 160, KSH 160 3KGHF 160/175 KS 160, KSPS 160 KG 160, KSF 175 UVE 160 KTG 160, KTN 160 3KTH 160-46/175-46 QLC 175		160 INTERNATIONAL (UP TO 89) 160 HIGH SPEED Q.C. (UP TO 89) 165 HYD. FRONT END	KFH 160, KFD 160 KFH-NC 160 KFH-F 160 KFH-G 160 KFD-HF 160 SPD 160 SPO 160	THF 165-37 TH 165-37 HSL 165-37 ROTA NC 165 ROTA NCF 160 ROTA NCO 165	HFS 160 HFKS 160 KDV 160 KDVG 160 KFV 160
IDN 200/220 IDL 200 HDN 200/220 HDL 200 GHDN 210 CD 200 GHD/FC 210 HDB 220	3KGH 200, KL 200 3KGHF 200, KSF 200 KS 200, KSH 200 3KTGF 200, KSPS 200 UVE 200, KSHF 200 KG 200, KLNC 200 3NHF 200, KP 200 3NH 200 KTG 200, KTN 200 3KTH 200-66	MAC 200 MAC 220 DE 210	210 NEW INTERNATIONAL 210 NEW HIGH SPEED Q.C. 200 INTERNATIONAL (UP TO 89) 210 HYD. FRONT END 200 HIGH SPEED Q.C. (UP TO 89) 210 KB INTERNATIONAL 210 KB HIGH SPEED Q.C.	KFH 200 KFH-NC 200 KFH-F 200 KFH-G 200 KFH-HF 200 KDF 200 SPD 215 SPO 215	THF 210-52 TH 210-52 HSG 200-66 HSL 210-52 ROTA NC 210 ROTA NCF 210 ROTA NCD 210 ROTA NCO 200 TP 200	HFK 200 HFKS 200 KDV 200 KDVG 200 KFV 200
	QLC 210 KS 250 UVE 250 3NHF 250-65 3NHF 290-104 KL250 MO KS250 MO KSHF 250-55		254/265 NEW INTERNATIONAL 254 NEW HIGH SPEED Q.C. 250 HIGH SPEED Q.C. (UP TO 89) 265 KB INTERNATIONAL 265 KB HIGH SPEED Q.C.	KFL 250	HSG 250-91	KDV 250 KDVG 250
IDN 250 IDL 250 HDN 250 HDL 250 GHDN 250 GHD/FC 250 HDB 300 CD 250	KTG 250, KTN 250 3KTGF 250, KSH 250 KG 250, KP 250 3NHG 250, 3NH 250 3NHF 290, KLNC 250 KSHF 250, KL 250 KSPS 250 QLC 250	MAC 250 DE 250/260	250 INTERNATIONAL (UP TO 89) 254/305 HYD. FRONT END 305 NEW INTERNATIONAL 305 NEW HIGH SPEED Q.C. 305 KB INTERNATIONAL 305 KB HIGH SPEED Q.C	KFH 250 KFH-NC 250 KFH-F 250 KFH-G 250 KFD 250 KFD-HF 250	THF 250-71 TH 250-71 HSL 250-71 ROTA NC 250 ROTA NCF 250 ROTA NCD 250 ROTA NCO 250 TP 250	HFK 250/270 HFKS 250 KDV 250 KDVG 250 KFV 250
IDN 315/400 IDL 315/400 HDN 315/400 HDL 315/400 GHDN 315/400 CD 315 GHD/FC 305/400	KS 315/400 KTG 315, KTN 315 3KTGF 315, KP 315 UVE 315, KSPS 300 KG 315, KLNC 315 3NHF 315, 3NH 315 KSH 315/400 KSHF 315/400 3NHF 400	MAC 315 DE 320	315 INTERNATIONAL (UP TO 89) 315/400 HIGH SPEED Q.C. (UP TO 89)	KFH 315 KFH-NC 315 KFH-F 315 KFH-G 315 KFD-HF 315 KFD-315 KFL 315 SPD 300 SPO 315	THF 315-86 TH 315-86 HSG 315-108 HSL 315-91 ROTA NC 315 ROTA NCD 315 ROTA NCF 315 ROTA NCO 315 TP 315	HFK 315 HFKS 315 KDV 315/400 KDVG 315/400 KFV 315/400
IDN 500/630/800 IDL 500/630/800 GHDN 500/610/640/800 ALD 400 AND 400	QLC315 KS 500/620 KSH 500 KTG 630, KSJHF 630 3KTGF 400/500 UVE 400/500/630/800 KTG 400/500 KTN 400/500 KG 400/500 3NHF 400/500/630 3NH 400/500/630 KL 400/500 KLNC 400/500/ KP 400 KT 400/800 KTF 400/500 QLC 400	DE 400	400 INTERNATIONAL (UP TO 89) 400 HYD FRONT END 500 HYD FRONT END	KFH 400/500 KFH-F 400/500 KFH-G 400/500 KFH-NC 400/500 KFD 400/500/630/800 KFD-H 400/500 KFD-HF 400/500 KKFD-HS 400/500 LVE 400/500/630/1000 KFL 500/630	THF 400-120 TH 400-120 THF 500-160 TH 500-160 TH 630-180 HSG 400-176 HSG 500-165 HSL 400-120 ROTA NC 400 ROTA NCD 400 ROTA NCF 400 ROTA NC0 400	HFK 400/500 HFKS 400/500 KDV 500 KDVG 500 KDM 500 KFV 400/500/630/800

TECHLEADER® TOOLING INC.

Serrated Diamond Soft Top Jaws

To suit Howa, Kitagawa, Matsumoto, Pratt Burnerd, Röhm & Schunk Power Chucks

Techleader Part No.	A	B	C	D	K + J Bolt	SERRATIONS	WEIGHT KG/set	HOWA	KITAGAWA	MATSUMOTO MMK	PR11 BURNRED	Röhm	SCHUNK
CN 16 STEEL HN16 ALUMINUM *AKT6FG ALUMINUM	60 64	60 64 2"	120 120	12	20+15 M10	1.5 X 60°	9.0 3.2	HO1MA6 HO7MA6 HO15M6 HO22M6 HO27M6 HO37M6	AS-65 B-160 B-06 HOB-6 HOS 6 N-160 BB-06 HG738-165 B206 HO-6 HOH-160 HOH-6 HJA5-6 N-6 BL-206		INTERNATIONAL 9821-21723 9821-31723 HIGH SPEED QUICK CHANGE 9121-21723 9121-31723	KFD-HE 170	HSL 165-37 ROTA NCK 165 ROTA NC 165 ROTA NCK 165
CN 20 STEEL HN 20 ALUMINUM *AKT8FG ALUMINUM	76 76	64 64 2"	150 150	14	25+15 M12	1.5 X 60°	14.0 5.0	HO7MA8 HO15M8	B200 B-08 N-200 N-08 AS-210 HOS-8 HJA6-8 HO-8 B208 HOB-8 HOH-200 HOH-8 NL-08 HOH 208 BB-08 BL-208 HG-715-210	HA6-8 HX-8 H-8 HH-8 HJ-8 HHJ-8 STC-8 ZA-6-8-52	INTERNATIONAL 9821-32123 9821-42123 HIGH SPEED QUICK CHANGE 9121-32123 9121-42123 210 KB	KFD-HE 210	HSL 210-52 ROTA NCK 210 ROTA NC 210 ROTA NCF 210
CN 25 STEEL HN 25 ALUMINUM *AKT10FG ALUMINUM	89 89	64 64 2"	170 170	16	30+20 M12	1.5 X 60°	20.0 7.0	HO7MA10 HO15M10	B250 HOH-250 B210 AS-250 N-10 HJA8-10 HO-10 HG730 254 B-10 BL 210 HOH-10 H0B-10 N-250 HJA6-10 HOS-10 NL-10	HA6-10 ZA-6-10-75 H-10 HHL-10 HHJ-10 HA8-11 HA8-10 HX-10 HH-10 HJ-10 STC-10	INTERNATIONAL 9821-42623 9821-52623 HIGH SPEED QUICK CHANGE 9121-42623 9121-52623 265 KB	KFD-HE 254	HSL 250-71 ROTA NCK 250 ROTA NC 250 ROTA NCF 250
CN 32 STEEL HN 32 ALUMINUM *AKT12FG ALUMINUM	118 118	76 76 2.5"	240 240	18	30+30 M14	1.5 X 60°	28.0 10.0	HO7MA12 HO15M12 HO27M10 HO37M10	B300 HOH-300 N-300 HOS-12 HJA8-12 HJA6-12 HLA6-12 NL-12 B-12 HOH-12 N-12 HO-12 HOB-12 HLA8-15 HLA6-16	HA8-12 H-12 HH-12 HJ-12 ZA8-12-72 ZA8-12-85 HX-12 SH-12 HHL-12 HHJ-12	INTERNATIONAL 9821-53123 9821-63123 HIGH SPEED QUICK CHANGE 9121-53123 9121-63123 305 KB		HSL 315-91
CN 33 STEEL HN 33 ALUMINUM *AKT212FG ALUMINUM	118 118	76 76 2.5"	240 240	21	30+30 M16	1.5 X 60°	28.0 10.0		B212			KFD-HE 315	ROTA NCK 315 ROTA NC 315 ROTA NCF 315
CN 38 STEEL HN 38 ALUMINUM	152 152	76 76	280 280	22	43+37 M20	1.5 X 60°	48.0 16.0		B15 B18				ROTA NC 400 ROTA NCF 400

***THESE JAWS ARE ALUMINUM PIE JAW, MADE FROM A ROUND EXTRUSION.**
IMPORTANT: Allow for weight of Diamond Jaws at high R.PM.'s as the grip loss due to the effect of centrifugal forces will be greater.

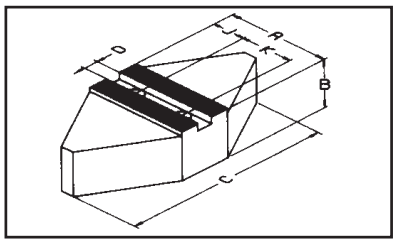

60° Serrations
Material: Steel: 080M15 (En32)
Aluminum: HE30TF

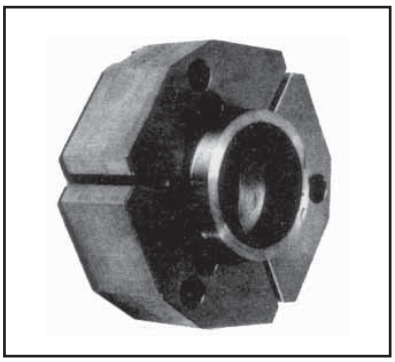

- Can be turned or bored to clamp entire circumference of workpiece
- Choice of steel or aluminum types
- Greater flexibility than pie jaws, can be reversed
- Aluminum diamond jaws - less weight for higher spindle speeds
- Helps stop distortion of thin walled components
- Can be machined to suit irregular parts

TECHLEADER® TOOLING INC.

Adjustagrip Hard Top Jaws

To Suit Howa, Kitagawa & Matsumoto Power Chucks

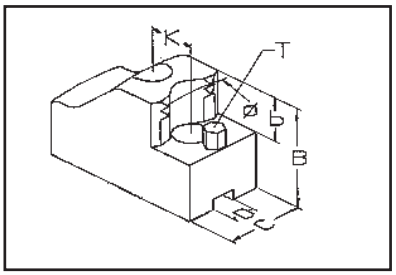

To suit power chucks
60° Serrations
External Ø Clamping Type
Material: Steel: 590M17

Techleader Part No.	B	C	D	K	b	T	Serrations	Weight Kg/Set	Chuck Ø	CHUCK TYPES – GRIPPING RANGE								
										HOWA			KITAGAWA				MATSUMOTO (MMK)	
										HO7MA	HO27M	HO37M	BA/HOB/HOH	B200	NL	N/NA	H/HA	ZA
LA 03	49	40	12	20	20	M6	1.5 X 60°	1.7	165	26-49	26-44	26-44		26-47	30-46	26-46		
LA 04								1.4		39-69	32-63	41-63	31-62	37-67	46-65	45-65		
LA 06								1.4		52-83	50-77	55-77	50-77	50-81	63-80	59-79		
LA 07								1.4		66-98	64-92	69-92	64-91	64-96	77-94	73-94		
LA 09								1.2		82-114	74-108	85-108	73-108	80-112	93-111	90-110		
LB 03	49	40	14	25	20	M6	1.5 X 60°	1.9	210	37-75	*26-71	*28-71	25-65	31-68	44-67	42-69	40-71	31-74
LB 06								1.8		66-102	*55-99	*57-99	54-93	60-96	72-98	69-97	69-99	60-101
LB 09								1.7		94-132	*82-128	*85-128	81-121	87-125	97-125	97-126	97-128	88-130
LB 12								1.7		121-159	*108-155	*111-155	108-149	114-152	125-151	125-152	124-155	115-158
LC 04	59	40	16	30	25	M8	1.5 X 60°	2.9	254/	40-100	*41-90	*48-86	41-81	44-85	43-83	42-91	52-92	43-88
LC 08								2.7	305	77-141	*78-130	*86-128	78-121	82-125	80-123	79-131	89-132	80-128
LC 13								2.6		120-185	*121-174	*128-172	121-165	125-169	123-167	122-175	133-176	123-171
LC 17								2.6		163-229	*164-218	*172-214	164-209	168-212	166-211	165-219	176-220	166-215
LD 05	59	50	18	30	25	M8	1.5 X 60°	4.5	304	53-128	*44-119	*54-119	46-114		55-119	51-117	50-126	55-127
LD 11								3.5		109-188	*97-179	*111-179	102-174		112-179	107-177	107-186	112-187
LD 17								3.1		173-253	*160-244	*175-244	165-239		176-244	171-241	170-251	176-252
LD 23								3.5		236-316	*223-307	*238-307	228-302		239-307	234-305	233-314	239-315
LE 05	59	50	21	30	25	M8	1.5 X 60°	4.4	304		†43-114	†50-114		48-112				
LE 10								3.4			†91-171	†104-171		102-168				
LE 16								3.0			†154-236	†167-236		165-233				
LE 23								3.4			†221-303	†234-303		232-300				
LF 05	79	60	22	43	33	M8	1.5 X 60°	9.3	380				50-108					
LF 10								8.3					99-162					
LF 16								6.0					160-224					
LF 22								5.6					220-285					
LF 28								6.0					279-345					
LF 34								7.8					339-404					

* For the jaws in these ranges to fit, special T-Nuts are required. Types GA08, GA10 & GA12.
† For the jaws in these ranges, standard T-Nuts must be split

Adjustagrip Jaws are available on request in special sizes or to suit other chuck types.

TECHLEADER® TOOLING INC.

Adjustagrip Hard Top Jaws

To Suit Pratt Burnerd, Schunk & SMW-Autoblok Power Chucks

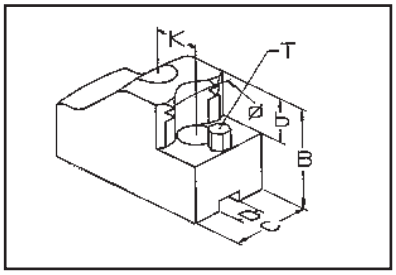

To suit power chucks
60° Serrations
External Ø Clamping Type
Material: Steel: 590M17

Techleader Part No.	B	C	D	K	b	T	Serrations	Weight Kg/Set	Chuck Ø	CHUCK TYPES – GRIPPING RANGE: PRATT BURNERD INT'L. KB	PRATT BURNERD HSQC KB	PRATT BURNERD INTERNATIONAL	PRATT BURNERD HSQC	SCHUNK HSL	SCHUNK ROTA NCK	SMW - AUTOBLOK BB-M	SMW - AUTOBLOK BH-M	SMW - AUTOBLOK AL-M	SMW - AUTOBLOK AN-M
LA 03	49	40	12	20	20	M6	1.5 X 60°	1.7	150	27-37									
LA 04								1.4		36-56									
LA 06								1.4		50-71									
LA 07								1.4		64-85									
LA 09								1.2		80-102									
LA 03	49	40	12	20	20	M6	1.5 X 60°	1.7	165/	34-49		24-46		34-59	26-47	33-64	27-52	27-54	27-52
LA 04								1.4	170/	53-68		41-65	30-64	53-78	35-67	52-83	41-71	45-79	43-71
LA 06								1.4	175	67-83		55-80	50-78	67-93	50-81	66-98	55-86	58-88	56-86
LA 07								1.4		82-98		69-94	64-92	81-108	71-96	80-112	69-101	73-103	70-100
LA 09								1.2		97-114		85-111	72-109	98-124	80-112	97-129	85-117	89-119	87-117
LA 03	49	40	12	20	20	M6	1.5 X 60°	1.7	210	62-88									
LA04								1.4		82-107									
LA 06								1.4		96-122									
LA 07								1.4		111-137									
LA 09								1.2		127-153									
LB 03	49	40	14	25	20	M6	1.5 X 60°	1.9	210		38-68	39-69	25-72	45-79	33-98	46-76	32-75	45-77	42-74
LB 06								1.8			66-96	68-97	50-100	73-106	62-125	74-103	60-102	74-105	70-101
LB 09								1.7			94-125	96-126	75-129	101-135	90-154	102-132	88-132	102-134	98-130
LB 12								1.7			121-153	123-153	102-157	129-163	116-182	130-160	115-159	129-162	125-158
LC 04	59	40	16	30	25	M8	1.5 X 60°	2.9	254/	58-100	39-103	43-84	38-91	49-98	45-117	58-83	48-82	53-87	49-83
LC 06								2.9	265/							78-103	68-102	73-107	69-103
LC 08								2.7	305	97-140	69-143	80-124	60-131	87-138	82-158	97-123	86-122	92-128	87-123
LC 10								2.7								117-143	106-142	112-148	107-143
LC 13								2.6		140-185	112-188	123-168	102-175	131-183	125-202	140-167	130-166	135-172	131-167
LC 15								2.6								160-187	150-186	155-192	151-187
LC 17								2.6		184-228	155-231	166-212	145-219	174-226	168-246	184-210	173-209	179-215	174-210
LD 05	59	50	18	30	25	M8	1.5 X 60°	4.5	304/	61-118	44-125	57-124		67-138	61-160				
LD 11								3.5	305/	118-180	88-185	114-184		125-198	119-220				
LD 17								3.1	315	180-245	147-250	178-249		189-263	183-286				
LD 23								3.5		245-307	210-314	241-312		252-327	246-349				
LE 05	59	50	21	30	25	M8	1.5 X 60°	4.4	304/							89-125	60-126	54-131	49-124
LE 07								4.0	315							117-153			
LE 10								3.4								145-181	115-182	109-187	103-181
LE 13								3.2								175-211			
LE 16								3.0								210-246	179-246	172-252	166-246
LE 20								3.2								243-279			
LE 23								3.4								277-314	246-315	239-320	233-313
LF 05	79	60	22	43	33	M8	1.5 X 60°	9.3	380			59-117	47-117						
LF 10								8.3				110-171	82-171						
LF 16								6.0				171-234	137-234						
LF 22								5.6				232-295	197-295						
LF 28								6.0				291-354	255-354						
LF 34								7.8				350-414	315-414						

TECHLEADER® TOOLING INC.

Adjustagrip Hard Top Jaws

To Suit Howa, Kitagawa & Matsumoto Power Chucks

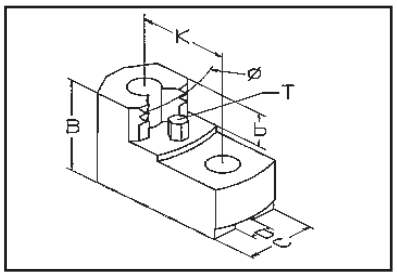

To suit power chucks
60° Serrations
Internal Ø Clamping Type
Material: Steel: 590M17

Techleader Part No.	B	C	D	K	b	T	Serrations	Weight Kg/Set	Chuck Ø	CHUCK TYPES – GRIPPING RANGE: HOWA H07MA	HOWA H027M	HOWA H037M	KITAGAWA BA/HOB/HOH	KITAGAWA B200	KITAGAWA NL	KITAGAWA N/NA	MATSUMOTO (MMK) H/HA	MATSUMOTO (MMK) ZA
MA 05	49	40	12	20	20	M6	1.5 X 60°	1.5	165	45-71		45-65		45-69	51-67	47-67		
MA 06								1.4		51-82	47-76	54-76	47-76	49-80	62-80	58-78		
MA 07								1.3		70-102	67-96	72-96	67-95	68-99	80-101	77-99		
MA 09								1.1		92-124	83-118	95-118	83-117	90-122	101-121	99-120		
MB 06	49	40	14	25	20	M6	1.5 X 60°	1.9	210	55-92	*50-88	*50-88	50-82	50-85	61-89	59-89	58-88	50-91
MB 08								1.8		84-122	*72-118	*75-118	72-112	78-115	89-120	80-120	87-120	78-120
MB 11								1.7		117-155	*105-151	*108-151	104-145	110-148	120-152	120-151	120-151	111-155
MB 14								1.7		146-185	*134-181	*137-181	133-174	139-178	152-177	151-177	149-181	140-184
MC 06	59	40	16	30	25	M8	1.5 X 60°	2.7	254/	56-119	*57-109	*65-105	57-100	61-103	59-102	58-109	68-111	59-107
MC 10								2.5	265/	95-159	*96-149	*104-145	96-140	100-143	98-142	97-149	108-151	98-147
MC 14								2.3	305	136-201	*137-190	*145-186	137-181	140-185	139-183	138-191	149-192	139-188
MC 18								2.2		175-240	*176-230	*184-226	176-221	180-224	178-223	177-231	188-232	178-228
MD 08	59	50	18	30	25	M8	1.5 X 60°	3.9	304	81-159	*74-150	*83-150	74-145		84-150	79-148	79-157	83-158
MD 14								3.0		142-221	*129-212	*144-212	134-207		145-212	140-210	139-219	144-220
MD 20								3.0		203-283	*189-273	*204-273	195-269		205-274	200-271	200-280	205-281
ME 08	59	50	21	30	25	M8	1.5 X 60°	3.9	304		†74-148	†80-148		78-145				
ME 14								3.0			†131-212	†144-212		142-209				
ME 20								3.0			†189-271	†203-271		201-269				
MF 10	79	60	22	43	33	M8	1.5 X 60°	8.8	380				100-162					
MF 16								7.1					160-224					
MF 22								4.1					222-287					
MF 28								4.1					280-345					

* For the jaws in these ranges to fit, special T-Nuts are required. Types GA08, GA10 & GA12.
† For the jaws in these ranges, standard T-Nuts must be split

Adjustagrip Jaws are available on request in special sizes or to suit other chuck types.

TECHLEADER® TOOLING INC.

Adjustagrip Hard Top Jaws

To Suit Pratt Burnerd, Schunk & SMW-Autoblok Power Chucks

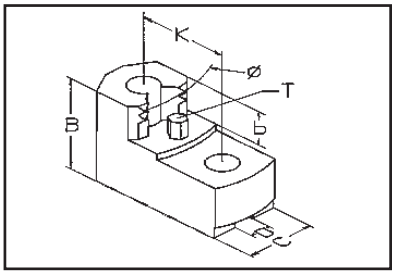

To suit power chucks
60° Serrations
Internal Ø Clamping Type
Material: Steel: 590M17

Techleader Part No.	B	C	D	K	b	T	Serrations	Weight Kg/Set	Chuck Ø	CHUCK TYPES – GRIPPING RANGE									
										PRATT BURNERD				SCHUNK		SMW - AUTOBLOK			
										INT'L. KB	HSQC KB	INTERNATIONAL	HSQC	HSL	ROTA NCK	BB-M	BH-M	AL-M	AN-M
MA 05	49	40	12	20	20	M6	1.5 X 60°	1.5	150	46-58									
MA 06								1.4		48-70									
MA 07								1.3		68-89									
MA 09								1.1		89-111									
MA 05	49	40	12	20	20	M6	1.5 X 60°	1.5	165/	55-70		45-67		55-80		54-85	46-73	47-75	46-73
MA 06								1.4	170/	66-83		54-79	47-77	66-92	47-80	65-97	54-85	58-87	55-85
MA 07								1.3	175	83-101		73-98	67-96	85-111	68-99	84-116	72-104	76-107	74-104
MA 09								1.1		108-124		95-120	82-119	107-134	75-122	104-139	95-127	99-129	96-126
MA 05	49	40	12	20	20	M6	1.5 X 60°	1.5	210	84-109									
MA 06								1.4		95-121									
MA 07								1.3		115-141									
MA 09								1.1		137-163									
MB 06	49	40	14	25	20	M6	1.5 X 60°	1.9	210		55-85	57-86	50-89	62-96	51-114	63-93	51-92	63-94	59-90
MB 08								1.8			85-115	86-119	68-119	92-126	80-144	93-123	79-122	92-125	89-121
MB 11								1.7			115-149	119-149	98-153	125-159	113-178	126-155	111-155	125-158	121-154
MB 14								1.7			147-178	148-179	127-182	154-189	142-207	155-186	140-185	155-187	151-183
MC 06	59	40	16	30	25	M8	1.5 X 60°	2.7	250/	75-119	54-122	59-103	54-110	66-117	62.137	75-101	65-100	71-106	66-101
MC 08								2.5	254/	115-159	87-162	98-143	77-150	105-157	100-177	95-121	85-120	91-126	86-121
MC 10								2.5	265	156-201	128-203	139-184	117-191	146-198	142-218	115-141	104-140	110-146	105-141
MC 12								2.4		195-240	167-243	178-224	157-231	186-238	181-258	135-161	124-160	130-161	125-162
MC 14								2.3								155-183	145-182	151-188	146-183
MC 16								2.3								175-201	165-200	171-195	166-201
MC 18								2.2								196-222	185-221	191-227	186-222
MD 08	59	50	18	30	25	M8	1.5 X 60°	3.9	304/	91-151	74-156	86-155		97-170	90-192				
MD 14								3.0	305/	151-212	116-218	147-217		158-232	151-254				
MD 20								3.0	315	212-273	176-280	207-278		219-293	212-316				
ME 08	59	50	21	30	25	M8	1.5 X 60°	3.9	315						122-158	92-159	85-164	79-158	
ME 10								3.5							154-190				
ME 14								3.0							186-222	156-223	149-228	143-222	
ME 18								3.0							215-251				
ME 20								3.0							245-282	215-283	208-288	201-282	
ME 24								3.1							275-312				
MF 10	79	60	22	43	33	M8	1.5 X 60°	8.8	380			101-171	96-171						
MF 16								7.1				171-234	137-234						
MF 22								4.1				234-297	199-299						
MF 28								4.1				291-354	256-355						

TECHLEADER® TOOLING INC.

Adjustagrip Hard Top Jaws

To Suit Autoblok Power Chucks

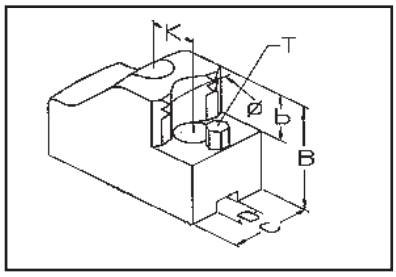

To suit power chucks
90˚ Serrations
External Ø Clamping Type
Material: Steel: 590M17

										CHUCK TYPES – GRIPPING RANGE				
										AUTOBLOK				
Techleader Part No.	B	C	D	K	b	T	Serrations	Weight Kg/Set	Chuck Ø	IDN/HDN	GHDN	GHD/FC	BHD	BBD
IB 03	49	40	17	22	20	M6	1/16"X90˚	2.7	200/210					
IB 04								2.3		33-68	34-71	34-71	34-70	41-73
IB 05								2.1		59-96	60-98	60-98	55-97	68-100
IB 08								2.1		86-125	88-127	88-127	82-126	96-129
IB 11								2.0		115-154	116-157	116-157	111-156	125-158
IB 14								1.9		144-184	146-186	146-186	140-185	155-188
IB 03	49	40	17	22	20	M6	1/16"X90˚	2.7	220/250					
IB 04								2.3		37-85				
IB 05								2.1		64-113				
IB 08								2.1		92-142				
IB 11								2.0		121-172				
IB 14								1.9		150-202				
IC 04	59	50	21	25	25	M8	1/16"X90˚	3.9	250					
IC 05								3.3		45-98	44-96	44-96	45-94	54-98
IC 08								2.7		88-143	87-141	87-141	89-139	98-140
IC 13								2.4		137-194	136-191	136-191	138-189	147-190
IC 18								2.8		188-245	187-243	187-243	188-241	198-242
IC 04	59	50	21	25	25	M8	1/16"X90˚	3.9	250/305			50-110		
IC 05								3.3			52-97			
IC 08								2.7			96-145	105-190		
IC 13								2.4			145-195	155-242		
IC 18								2.8			195-244	206-293		
IC 04	59	50	21	25	25	M8	1/16"X90˚	3.9	315	50-125	50-120		50-118	66-117
IC 05								3.3						100-152
IC 08								2.7		110-206	115-200		117-198	146-197
IC 13								2.4		160-257	165-252		167-250	196-249
IC 18								2.8		211-309	216-303		218-301	248-300
IC 04	59	50	21	25	25	M8	1/16"X90˚	3.9	400	65-208		65-208		
IC 05								3.3						
IC 08								2.7		145-288		145-288		
IC 13								2.4		195-340		195-340		
IC 18								2.8		247-392		247-392		
ID 06	79	60	25.5	35	33	M8	3/32"X90˚	9.0	500			90-244		
ID 13								6.3				175-333		
ID 21								4.8				261-420		
ID 30								6.6				350-509		
ID 06	79	60	25.5	35	33	M8	3/32"X90˚	9.0	630			91-246		
ID 13								6.3				175-462		
ID 21								4.8				261-549		
ID 30								6.6				350-639		

TECHLEADER® TOOLING INC.

Adjustagrip Hard Top Jaws

To Suit Schunk & SMW-Autoblok Power Chucks

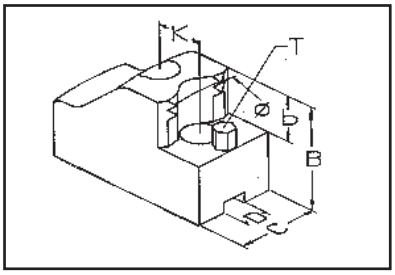

To suit power chucks
90° Serrations
External Ø Clamping Type
Material: Steel: 590M17

Techleader Part No.	B	C	D	K	b	T	Serrations	Weight Kg/Set	Chuck Ø	CHUCK TYPES – GRIPPING RANGE						
										SCHUNK				SMW - AUTOBLOK		
										TH-THF	HGS	HSL	ROTA NC/INCF	HFK/HFKS	AN-D	AL-D
IA 03	49	40	17	19	20	M6	1/16" X 90°	1.8	160/165/200	41-76	67-113	45-72	36-64	39-63		
IA 05								1.4		60-95	86-132	64-91	55-83	58-82		
IA 07								1.5		81-118	109-154	86-114	76-106	79-104		
IA 09								1.6		103-140	131-177	108-136	89-128	101-126		
IA 11								1.5		125-162	153-200	130-158	120-150	123-149		
IA 03	49	40	17	19	20	M6	1/16" X 90°	1.8	200/210/250		95-142	59-104		47-97		
IA 05								1.4			114-161	78-123		66-116		
IA 07								1.5			136-183	100-146		88-138		
IA 09								1.6			158-206	122-168		110-161		
IA 11								1.5			181-228	145-191		132-183		
IB 03	49	40	17	22	20	M6	1/16" X 90°	2.7	200/210	34-77			35-69	35-59	35-62	
IB 04								2.3		39-89			44-81	38-70	41-74	
IB 05								2.1		66-116			71-108	65-97	68-101	
IB 08								2.1		94-145			99-137	92-126	96-130	
IB 11								2.0		123-175			128-166	121-156	125-160	
IB 14								1.9		152-205			158-196	151-185	155-189	
IC 04	59	50	21	25	25	M8	1/16" X 90°	3.9	250	34-83		35-75	35-75	34-63	35-60	35-65
IC 05								3.3		52-118		51-110	49-110	51-97	51-94	55-99
IC 08								2.7		96-163		95-155	93-155	95-142	94-139	99-144
IC 11								2.5						120-167	120-164	125-169
IC 13								2.4		145-214		144-206	142-206	144-193	144-190	149-195
IC 16								2.6						170-219	170-216	175-220
IC 18								2.8		196-265		195-257	193-257	195-244	195-241	200-246
IC 04	59	50	21	25	25	M8	1/16" X 90°	3.9	315	49-136	60-135	46-126	41-135	37-126	35-116	39-122
IC 05								3.3		82-172	94-170	78-161	72-170	68-161	64-151	70-158
IC 08								2.7		127-217	139-216	123-206	117-215	113-206	108-197	114-203
IC 13								2.4		177-268	190-267	174-257	167-267	163-257	158-248	165-254
IC 18								2.8		229-320	241-319	225-309	218-318	214-309	209-299	216-306
ID 06	79	60	25.5	35	33	M8	3/32" X 90°	9.0	400	69-154	64-157		60-162	61-155	62-134	66-139
ID 08								7.4							105-177	109-182
ID 13								6.3		153-242	148-245		143-249	144-243	145-221	150-227
ID 18								5.4							187-263	192-269
ID 21								4.8		238-329	233-332		228-336	229-330	230-308	236-314
ID 25								5.2							275-353	280-360
ID 30								6.6		327-418	322-421		317-426	318-419	319-397	324-403
ID 06	79	60	25.5	35	33	M8	3/32" X 90°	9.0	500	115-272	96-247		111-259	98-249		
ID 13								6.3		202-360	182-336		198-347	185-337		
ID 21								4.8		289-447	268-423		284-435	271-424		
ID 30								6.6		378-537	357-512		373-524	360-514		

TECHLEADER® TOOLING INC.

Adjustagrip Hard Top Jaws

To Suit Autoblok Power Chucks

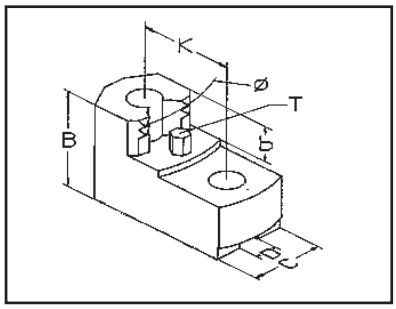

To suit power chucks
90˚ Serrations
Internal Ø Clamping Type
Material: Steel: 590M17

										CHUCK TYPES – GRIPPING RANGE				
										AUTOBLOK				
Techleader Part No.	B	C	D	K	b	T	Serrations	Weight Kg/Set	Chuck Ø	IDN/HDN	GHDN	GHD/FC	BHD	BBD
JB 06	49	40	17	22	20	M6	1/16"X90˚	1.8	200/210	62-101	64-103	64-103	58-102	72-105
JB 09								1.8		94-133	95-135	95-135	89-134	104-137
JB 12								1.7		125-164	126-166	126-166	120-165	135-168
JB 06	49	40	17	22	20	M6	1/16"X90˚	1.8	220/250	68-118				
JB 09								1.8		100-150				
JB 12								1.7		131-182				
JC 08	59	50	21	25	25	M8	1/16"X90˚	3.9	250	81-117	81-114	81-114	81-114	81-113
JC 10								2.8		114-170	113-168	113-168	114-166	124-167
JC 15								2.6		165-222	163-219	163-219	165-217	175-218
JC 08	59	50	21	25	25	M8	1/16"X90˚	3.9	250/305		81-115	81-164		
JC 10								2.8			122-169	132-218		
JC 15								2.6			173-220	183-269		
JC 08	59	50	21	25	25	M8	1/16"X90˚	3.9	315	83-180	88-174		89-172	119-173
JC 10								2.8		137-233	142-228		144-226	173-225
JC 15								2.6		188-285	192-279		194-277	224-276
JC 08	59	50	21	25	25	M8	1/16"X90˚	3.9	400	118-263		118-263		
JC 10								2.8		172-316		172-316		
JC 15								2.6		223-368		223-368		
JD 10	79	60	25.5	35	33	M8	3/32"X90˚	8.6	500			135-291		
JD 17								6.7				212-370		
JD 25								4.0				291-450		
JD 10	79	60	25.5	35	33	M8	3/32"X90˚	8.6	630			135-420		
JD 17								6.7				212-499		
JD 25								4.0				291-579		

TECHLEADER® TOOLING INC.

Adjustagrip Hard Top Jaws

To Suit Schunk & SMW-Autoblok Power Chucks

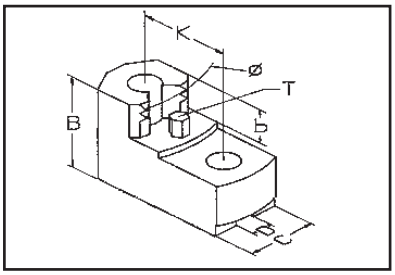

To suit power chucks
90° Serrations
Internal Ø Clamping Type
Material: Steel: 590M17

Techleader Part No.	B	C	D	K	b	T	Serrations	Weight Kg/Set	Chuck Ø	CHUCK TYPES – GRIPPING RANGE						
										SCHUNK				SMW - AUTOBLOK		
										TH-THF	HGS	HSL	ROTA NC/INCF	HFK/HFKS	AN-D	AL-D
JA 05	49	40	17	19	20	M6	1/16" X 90°	1.7	160/165/200	61-97	88-134	66-93	57-85	59-84		
JA 07								1.6		83-120	110-156	88-115	78-107	81-106		
JA 09								1.5		104-141	132-178	109-137	99-129	102-127		
JA 11								1.5		125-162	153-200	130-158	120-150	123-149		
JA 05	49	40	17	19	20	M6	1/16" X 90°	1.7	200/210/250		115-163	80-125		68-118		
JA 07								1.6			138-185	102-148		90-140		
JA 09								1.5			159-207	123-169		111-162		
JA 11								1.5			181-228	145-191		132-183		
JB 06	49	40	17	22	20	M6	1/16" X 90°	1.8	200/210	70-121			75-113		68-102	72-106
JB 09								1.8		102-153			107-145		100-134	104-138
JB 12								1.7		133-185			138-176		131-165	134-169
JC 08	59	50	21	25	25	M8	1/16" X 90°	3.9	250	81-136		81-128	81-128	81-120	81-112	81-117
JC 09								3.1							101-144	101-149
JC 10								2.8		122-190		121-182	119-182	120-172	121-166	126-171
JC 12								2.6							156-191	161-196
JC 15								2.6		172-241		171-233	169-233	172-221	171-217	176-222
JC 08	59	50	21	25	25	M8	1/16" X 90°	3.9	315	100-191	112-190	96-180	90-190	85-180	81-170	87-177
JC 10								2.8		154-244	166-243	150-234	144-243	139-234	135-224	141-230
JC 15								2.6		205-296	218-295	201-285	195-295	190-285	186-276	192-282
JD 10	79	60	25.5	35	33	M8	3/32" X 90°	8.6	400	113-201	108-203		103-208	104-202	105-180	110-185
JD 17								6.7		189-279	184-282		179-287	180-280	181-258	186-264
JD 25								4.0		267-359	262-361		257-366	259-360	259-337	265-343
JD 10	79	60	25.5	35	33	M8	3/32" X 90°	8.6	500	161-318	141-294		157-306	144-295		
JD 17								6.7		239-397	219-373		234-385	221-374		
JD 25								4.0		318-477	298-453		313-464	300-454		

Adjustagrip Jaws are available on request in special sizes or to suit other chuck types.

TECHLEADER® TOOLING INC.

Hard Top Bar Jaws

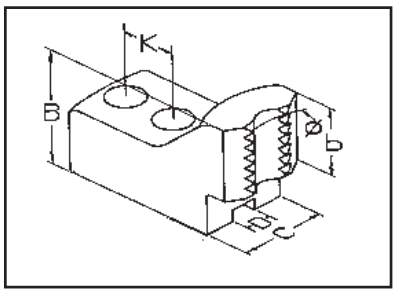

Techleader Part No.	B	C	D	K	Serrations	Weight Kg/Set
KK 16	39	35	12	20	1.5" X 60˚	1.5
KK 20	49	40	14	25		2.2
KK 25	49	40	16	30		2.3
KK 32	49	50	18	30		3.7
KK 33	49	50	21	30		3.7

60˚ Serrations

Bar Clamping Type
Material: Steel: 590M17

		CHUCK TYPES - GRIPPING RANGE								
		HOWA			KITAGAWA				MATSUMOTO (MMK)	
Techleader Part No.	CHUCK Ø	HO7MA	HO27M	HO37M	BA/HOB/HOH	B200	NL	N/NA	H/HA	ZA
KK 16	165	13-35	*13-29	*13-29	13-29	13-33	16-32	13-31		
KK 20	210	17-51	*16-48	*16-48	16-41	16-45	16-44	20-44	19-48	22-51
KK 25	254/305	23-81	*23-70	*28-66	23-62	25-65	24-63	23-71	39-72	25-51
KK 32	304		*27-91	*29-91	27-86		29-91	27-89	27-87	33-98
KK 33	304		*27-91	*29-91		27-88				

* For the jaws in these ranges to fit, special T-nuts are required Types GA08, GA10 & GA12.

		CHUCK TYPES - GRIPPING RANGE									
		PRATT BURNERD				SCHUNK		SMW-AUTOBLOK			
Techleader Part No.	CHUCK Ø	INT'L.	HSQC	INT'L. KB	HSQC KB	HSL	ROTA NCK	BB-M	BH-M	AL-M	AN-M
KK 16	150/165/175	13-31	13-30	13-23		20-45	14-33	18-50	13-38	13-40	13-37
KK 20	210	18-45	16-49	48-74	16-45	22-55	16-74	23-52	16-51	23-54	20-50
KK 25	250/254/265/305	33-65	23-71	38-81	23-83	29-79	26-98	38-63	29-62	34-68	30-63
KK 32	304/305/315	30-96	27-97	34-90	27-97	39-90	34-132				
KK 33	315							65-101	37-102	32-107	28-101

Adjustagrip Jaws are available on request in special sizes or to suit other chuck types.

TECHLEADER® TOOLING INC.

Hard Top Bar Jaws

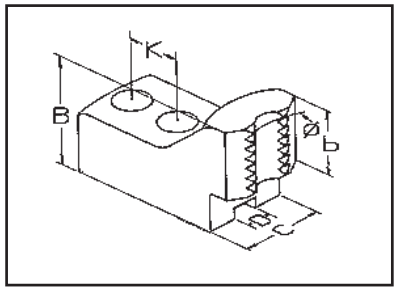

Techleader Part No.	B	C	D	K	Serrations	Weight Kg/Set
KJ 16	39	40	17	19	1/16" X 90˚	1.6
KJ 20	49	40	17	22		2.0
KJ 26	49	50	21	25		2.5
KJ 32	49	50	21	25		3.0
KJ 40	59	60	25.5	35	3/32" X 90˚	6.0

90˚ Serrations

Bar Clamping Type
Material: Steel: 590M17

		CHUCK TYPES - GRIPPING RANGE								
Techleader Part No. KFD-HS	CHUCK Ø	AUTOBLOK					BERG		ROHM	
		IDN/HDN	GHDN	GHD/FC	BHD	BBD	HES	HESF	KFD	
KJ 16	160/165/175						14-23		14-40	25-71
KJ 20	200/210/250	21-52	19-54	19-54	25-56	19-53	19-38	19-41	19-56	21-94
KJ 26	250/305/315	23-73	28-71	28-71	30-70	23-69	22-64	22-69	24-80	
KJ 32	315/400	36-100	39-100	39-100	67-110	41-110		38-110	30-110	30-110
KJ 40	400/500/600	66-150		50-150			40-90	40-90	40-110	40-110

		CHUCK TYPES - GRIPPING RANGE						
Techleader Part No. CHANGE	CHUCK Ø	FORKARDT						PRATT BURNERD
		KS	KT	KTH	KTGF	NH/NHF	QLC	HS QUICK
KJ 16	160/165/175	14-26	15-29	24-49		25-40	18-55	
KJ 20	200/210/250	19-40	19-42	27-64	27-64	19-55	33-89	19-56
KJ 26	250/305/315		22-63		22-63	22-63	28-76	
KJ 32	315/400	29-110	29-110		29-110	31-110	33-128	29-110
KJ 40	400/500/600	40-150	40-95		40-95	40-100	40-96	

		CHUCK TYPES - GRIPPING RANGE						
Techleader Part No.	CHUCK Ø	SCHUNK				SMW AUTOBLOK		
		TH/THF	HSG	HSL	Rota NC/NCF	AL-D	AN-D	
KJ 16	160/165/175	23-59	49-96	27-55	18-47	29-60		
KJ 16	200/210/250		77-125	41-87				
KJ 20	200/210/250	23-72			27-64	26-54	25-57	21-53
KJ 26	250/305/315	28-93		27-85	26-85	34-72	30-74	27-69
KJ 32	315/400	50-110	61-137	46-127	41-137	37-110	39-124	34-118
KJ 40	400/500/600	72-110	40-112			57-110	40-95	40-90
KJ 40	500		54-202					

Adjustagrip Jaws are available on request in special sizes or to suit other chuck types.

TECHLEADER® TOOLING INC.

Serrated Hard Top Jaws

To Suit Autoblok & SMW Autoblok Power Chucks

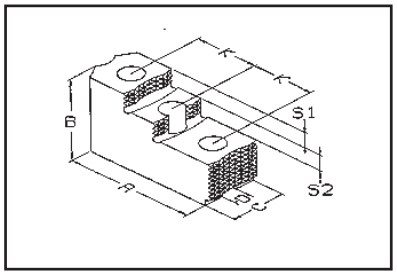

TYPE A

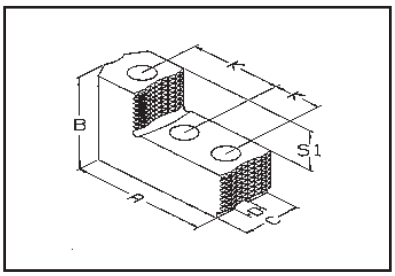

TYPE B

90˚ Serrations

Reversible Type
Material: Steel: 590M17 or 080M15

Techleader Part No.	A	B	C	D	K	S1	S2	Serrations	Type	Autoblok SMW-Autoblok
GR 20	76	44	32	14	22	24		1/16"X90˚	B	IDN 170 HDN 170 GHDN 165 GHD/FC 165 AND 165 ALD 165
GY 16 GY 20	67 74	44 49	35 40	17	19	10 12	10 12	1/16"X90˚	A	IDN 200/220 IDL 200 HDN 200/220 HDL 200 GHDN 210 CD 200 GHD/FC 210 HDB 220 BHD 210 BHD/FC 210 BBD 210 AND 210 ALD 210
GY 25	104	59	50	21	25	14	14	1/16"X90˚	A	IDN 250/315/400 IDL 250/315/400 HDN 250/315/400 HDL 250/315/400 GHDN 250/315/400 CD 250/315 HD/FC/250/350/400 HDB 300
GY 40	126	75	60	25.5	31	18	18	3/32"X90˚	A	IDN 500/630/800 IDL 500/630/800 GHDN 500/610 GHDN 640/800 ALD 400 AND 400

To Suit Gamet Power Chucks

Techleader Part No.	A	B	C	D	K	S1	S2	Serrations	Type	GAMET		
GR 16	65	35	29	11	18.5	17		1/16" X 90˚	B	160N	160MO	160GO
GR 20	76	44	32	14	22	24			B	215N	215MO	215GO
GR 28	94	51	44	20	28	24			B	250/280N	280MO	280GO
GR 35	128	65	50	21	40	28			B	350N	350MO	350GO

TECHLEADER® TOOLING INC.

Serrated Hard Top Jaws

To suit Forkardt, Gamet, Pratt Burnerd, Rohm, Schunk & SMW Power Chucks

FORKARDT	GAMET	PRATT BURNERD	ROHM	SCHUNK	SMW
	MAC 165				
3KGH 160/175/200 3KGF 160/175/200 QLC 175 KTG 160/200 3KTGF 200 KTN 160/200 KS 160/200/250 KL 160/200 KSHF 200 KSPS 160/200 KP 200 KSF 175/200 KG 200 UVE 160/200/250 3NH 200 3NHF 200 KSH 160/200 KLNC 200 KT 160/200 KTF 200 KTH 200/250/315 QLC 210	MAC 200 MAC 220 DE 210 GA 210	160 INTER (UP TO 89) 160 HIGH SPEED Q.C (UP TO 89) 165 HYD. FRONT END 210 INTER. 210 HIGH SPEED Q.C. 200 INTER. (UP TO 89) 200 HIGH SPEED Q.C. (UP TO 89) 210 HYD. FRONT END 250 HIGH SPEED Q.C. (UP TO 89) 254 INTER. 265 HIGH SPEED Q.C.	KFH 160/200 KFH-NC 160/200 KFH-F 160/200 KFH-G 160/200 KFD-HF 160/200 KFD-HE 160/200 KFD-HS 200/250 KFD 160/200/250 SPD 160/215 SPO 160/215 KFD-AF 160/200 KFL 250	THF 165-37 TH 165-37 THF 210-52 TH 210-52 HSL 165-37 HSG 200-37 HSL 210-52 HSG 250-91 ROTA NC 165 ROTA NCF 160 ROTA NCO 165 ROTA NC 210 ROTA NCF 200 ROTA NCO 200	HKF 160/200 HFKS 160/200 KDV 160/200/250 KDVG 160/200/250 KDS 160/200 KDM 160/200 KDM-F 160/200/250 KMA 160/200/250 KMA-F 160/200/250 KFV 160/200 SP 200 KFMF 160/200 KDS 160/200
KS 315/400 KG 250/315 KSH 250/315/400 KP 250/315 KT 250/315 3KTGF 250 UVE 315 KSHF 200/315/400 KTG 250/315 KTF 250/315 KLNC 250/315 KTN 250/315 3NHF 250/315 3NH 250/315 3NHF 290 3NHF 400 (INDEX) KL 250 KSPS 250/300 QLC 250/315	MAC 250 MAC 315 DE 250/260/320 GA 250/315	250 INTER (UP TO 89) 254 HYD. FRONT END 305 HYD. FRONT END 305 INTER. 305 HIGH SPEED Q.C. 315 INTER. (UP TO 89) 400 HIGH SPEED Q.C. (UP TO 89)	KFH 250/315 KFH-NC 250/315 KFH-F 250/315 KFH-G 250/315 KFD-HF 250/315 KFD 250/315 KFD-HF 250/315 KFD-HE 250/315 KFD-HS 315 KFD-AF 250/315 LVE 305 SPO 300 SPD 300	THF 250-71 TH 250-71 THF 315-86 TH 315-86 HSG 315-108 HSL 250-71 HSL 315-91 ROTA NC/250/315 ROTA NCD/250/315 ROTA NCF/250/315 ROTA NCO/250/315	HKF 250/315 HFKS 250/315 KDV 315/400 KDVG 315/400 KDS 250 KDM 250/315/400 KDM-F 315/400 KMA 315/400 KMA-F 315
KS 500/630 KSH 500 KSL 630 KSHF 630 KT 400/500/630 3KTGF 400/500 UVE 400/500/630/800 KTG 400/500 KTN 400/500 KG 400/500 3NHF 400/500/630 3NH 400/500/630 KL 400/500 KLNC 400/500 KP 400 KF 400/500 KTF 400/500 QLC 400	DE 400	400INTER (UP TO 89) 400 HYD. FRONT END 500 HYD. FRONT END	KFH 400/500 KFH-F 400/500 KFH-G 400/500 KFH-NC 400/500 KFD 400/500/630/800 KFD-H 400/500 KFD-HF 400/500 KFD-HS 400/500 LVE 400/500/630 KFL 500/630	THF 400-120 TH 400-120 THF 500-160 TH 500-160 TH 630-180 HSG 400-126 HSG 500-165 HSL 400-120 ROTA NC 400 ROTA NCD 400 ROTA NCF 400 ROTA NCO 400	HKF 400/500 HFKS 400/500 KDV 500 KDVG 500 KDS 315/400/500 KDM 500 KFV 400/500/630/800

TECHLEADER® TOOLING INC.

Serrated Hard Top Jaws

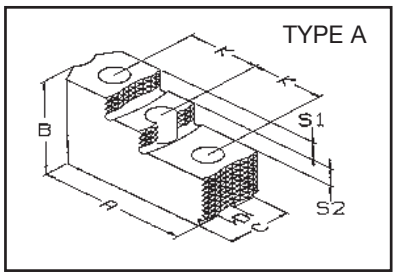

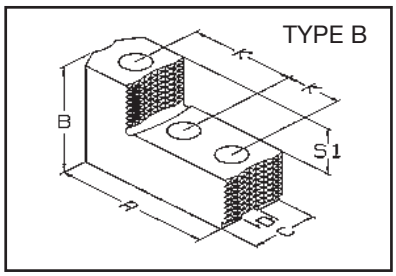

60˚ Serrations
Reversible Type
Material: Steel: 590M17 or 080M15

To Suit HOWA Power Chucks

Techleader Part No.	A	B	C	D	K	S1	S2	Serrations	Style	Chuck Ø	HOWA Chuck Types		
GW 06	66	38	32	12	20	11		1.5 X 60˚	B	165Ø	H027M6	H037M6	HO23M08
GW 08	83	40	40	16	25	13		1.5 X 60˚	B	210Ø	H027M8	H037M8	HO23M10
GW 10	98	44	44	18	30	15		1.5 X 60˚	B	254Ø	H027M10	H037M10	HO23M12
GW 12	111	60	50	21	35	23		1.5 X 60˚	B	304Ø	H027M12	H037M12	

To Suit KITAGAWA Power Chucks

Techleader Part No.	A	B	C	D	K	S1	S2	Serrations	Style	Chuck Ø	KITAGAWA Chuck Types	SAMCHULLY
GT 04	53	30	25	10	14	10		1.5 X 60˚	B	110Ø 135Ø	B-204 B-205	HS05
GT 05	57	32	25	10	18	13		1.5 X 60˚	B	135Ø	HOB-5 B-05	
GT 06	66	38	32	12	20	11	11	1.5 X 60˚	A	165Ø	B-206 B-160 HOH-160 N-160 BB-06 HJAS-6 H-06 HOB-6 HOS-6 AS 165	HS06, HC00 HH206
GT 08	86	50	35	14	25	11	11	1.5 X 60˚	A	210Ø	B-208 B-200 HOH-200 HJA6-8 HO-8 HOB-8 HOS-8 AS210 BB-08	HS08, HH208 HC08
GT 10	99	60	40	16	30	15	15	1.5 X 60˚	A	254Ø	B210 B250 HOH-250 N-250 HJA6-10 HJA8-10 HO-10 HOB-10 HOS-10 AS250	HS10, HC10
GT 12	103	70	50	18	30	17	17	1.5 X 60˚	A	304Ø	B300 HOH-300 N-300 HJA6-12 HJA8-12 HLA6-12 HO-12 HOB-12 HOS-12 HLA6-15 HLA8-15	HC12
GT 13	103	70	50	21	30	17	17	1.5 X 60˚	A	304Ø	B212	HS12, HH212
GT 15	140	89	64	22	43	22	22	1.5 X 60˚	A	380Ø 450Ø	B380 B-15 HOH-380 HOB-15 HOH-15 B450 B-18 HOB-18	HAH15, HAH18 HC15, HC18
GT21	178	90	60	25	60	40		3 X 60˚	B	530Ø 610Ø	HJ-450 HJ-18 B-350 B21 HJ-530 HJ-21 HOB-2–1 N-21 B-600 B-24 HJ-610 HJ24 N24 HOB24	HC-21 HC-24 HCH-21 HCH-24

To Suit MMK MATSUMOTO Power Chucks

Techleader Part No.	A	B	C	D	K	S1	S2	Serrations	Style	Chuck Dia	MMK MATSUMOTO Chuck Types
GT 05	57	32	25	10	18	13		1.5 X 60˚	B	135Ø	HXA5-6-34 HHXA5-6 SA5-6-40
GU 06	65	35	30	11	20	9	9	1.5 X 60˚	A	165Ø	HA5-6 HH-6 HX-6 HJ-6 H-6 STC-6 ZA5-6
GT 08	86	50	35	14	25	11	11	1.5 X 60˚	A	210Ø	HA6-8 HX-8 H-8 HH-8 HJ-8 HHJ-8 STC-8 ZA-6-8-52
GT 10	99	60	40	16	30	15	15	1.5 X 60˚	A	254Ø	HA6-10 HA8-10 ZA6-10-75 H-10 HX-10 HHL-10 HH-10 HHJ-10 HJ-10 HA8-11 STC-10
GT 12	98	60	50	18	30	17	17	1.5 X 60˚	A	304Ø	HA8-12 HX-12 H-12 SH-12 HH-12 HHL-12 HJ-12 HHJ-12 ZA8-12-78 ZA8-12-85
GU 15	140	89	64	22	44.5	22	22	3 X 60˚	A	380Ø 450Ø	HA11-15 HHL-15 H-15 HH-15 ZA11-15-120 HA11-18 H-18 HH-18

To Suit GAMET, NIKKO and ROHM Power Chucks

Techleader Part No.	A	B	C	D	K	S1	Serrations	Style	Gamet	Nikko	Rohm
GS 16	65	35	29	11	18.5	17	1.5 X 60˚	B	160N 160GO 140DE 160MO 170MF	GO-6 MO-6 HDM-165 HF-6AB HG-6AB D-170	KFN160 KFM160 KFG160 KFE160
GS 20	76	44	32	14	22	24	1.5 X 60˚	B	215N 215MO 170DE 215GO 215MF	GO-8 MO-8 HDM-215 HF-8 HG-8 MAC165	KFN215 KFM215 KFG215 KFE215
GS 28	94	51	44	20	28	24	1.5 X 60˚	B	250-280N 280MO 280GO 280MF	GO-10-12 HF-10/12 HG-10 MO-10/12 HDM-250/300	KFN250/280 KFM280 KFG280 KFE280
GS 35	128	65	50	21	40	28	1.5 X 60˚	B	350N 350MO 350GO 350MF	HF-14/16 MO-14 HDM-380 MAC-315	KFN350 KFM350 KFG350 KFE350

TECHLEADER® TOOLING INC.

Slot/Tenon Top Jaw and Chuck Data Sheet

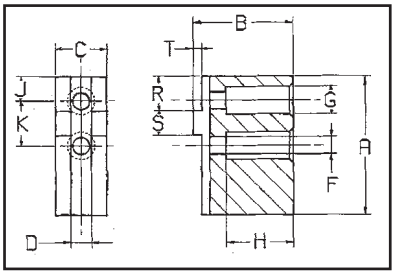

		2 JAW CHUCK DATA	3 JAW CHUCK DATA	REMARKS
Chuck Manufacturer / Model No.				
Chuck Ø / Type	ø1			
Maximum Swing Ø	ø2			
Chuck Bore Ø	ø3			
Base Jaw Width	C1			
Chuck Center to Rear of Slot	Y1 max Y2 min			
Thread	Z			
Center of Hole to Rear of Base Jaw	J1			
Tenon Width	S			
Slot Width	D			
Tenon to Back of Jaw	R			
Hole Center Spacing	K			
Counterbore/ Hole Ø	G/F			
Counterbore Depth	H			
Length of Jaw	A			
Height (Inc. Tenon) of Jaw	B			
Height of Tenon	T			
Width Of Jaw	C			

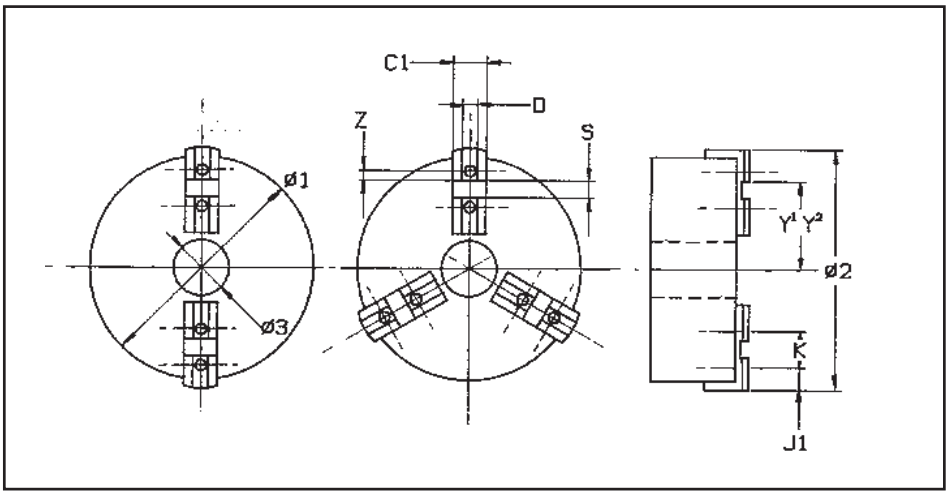

TECHLEADER® TOOLING INC.

Slot/Tenon Soft Top Jaws

For Quick Jaw Change Chucks

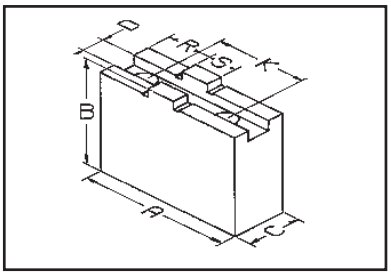

Material: Steel: 080M15
Black Finish

Techleader Part No. / Bolt	A	B	C	D	K	R	S		Weight Kg/set
CU 14	69	40	20	8	32	25	18	M8	0.9
CU 141	63	45	30			19			1.7
CU 16	85	40	20	8	32	25	18	M8	1.1
CU 161	85	55	30			19			2.6
DP 16	60	40	40			17			1.8
CU 163	70	60	40			19			3.3
CU 20	105	51	22	10	40	34	20	M8	2.2
CU 201	100	55	30			23			2.9
DP 20	70	40	40			22			2.2
CU 204	85	60	40			23			4.0
CU 205	95	80	40			23			5.8
CU 25	125	55	30	12	40	36	20	M12	3.6
CU 251	90	60	40			26			3.9
CU 252	125	60	40			26			5.8
CU 253	125	80	40			26			7.5
CU 254	125	100	40			26			9.6
CU 255	125	125	40			26			12.0
DP 25	90	60	60			26			6.2
CU 257	90	60	80			26			8.5
CU 32	145	60	40	12	54	45	26	M12	6.8
CU 321	110	60	40			30			4.9
CU 323	145	100	40			30			11.1
CU 324	145	125	40			30			13.9
CU 325	145	150	40			30			16.9
CU 326	110	60	60			30			7.6
DP 32	100	64	76			30			8.4
CU 328	110	80	80			30			14.1
CU 329	145	80	50			30			11.6
CU 40	180	80	50	18	60	50	30	M16	11.2
CU 401	130	76	64			35			11.9
CU 402	180	76	64			35			16.5
CU 403	155	102	64			35			15.3
CU 404	155	127	64			35			18.7
DP 40	130	80	80			35			16.2
CU 406	155	160	50			35			25.2
CU 63	260	127	64	24	82	70	40	M20	42.0

TECHLEADER® TOOLING INC.

Slot/Tenon Soft Top Jaws

To Suit Forkardt, Gamet, Kitagawa, Rohm, Schunk & SMW-Autoblok Quick Change Chucks

Forkardt	Gamet	Kitagawa	Rohm	Schunk	SMW Autoblok
			DURO NC 140 DURO NC 168		KNCS 140 KNCS 140-32 KNCS-N 140-35
F160 KTNC 160 KTNCV 175 KTNCV 160 FNC 175 F+160	MX 152 MX 175		DURO 160 DURO NC 160 DURO NCE 160 DURO NC 175	ROTA-G 160 ROTA-S 160 ROTA-S plus 160 ROTA NC-W 185 THW 165R	RMG 160 HG 160 HG-F 160 HG-N 160 KNSP 160 KNCS 160 KNCS 175 KNC 160 KNCS 170-43 KNCS-N 170-43
F 200 KTNC 200 KTNCV 200 FNC 200 F+200	MX 215	QJ8	DURO 200 DURO NC 200 DURO NCE 200 DURO NC 225	ROTA-G 200 ROTA-S 200 ROTA-S plus 200 ROTA NC-WF 210 ROTA NC-W 225 THW 210 F THW 210R	RMG 200 HG-F210 HG 200 HG-N210 KNSP 200 KNCS 200 KNCS 225 KNCS 210-52 KNCS-N 210-52 KNCS-N 225-65
F 250 KTNC 250 KTNC 280 KTNC 315 KTNCV 250 KTNCV 315 UNC 250/315 FNC 250/315 F+250	MX 252 MX 315 MX 330	QJ 10 QJ 12	DURO 250 DURO NC 250 DURO NCE 250 DURO NCE 315	ROTA-G 250 ROTA NC-WF 250 ROTA-S 250 ROTA-S plus 250 ROTA NC-W 265 ROTA G315 ROTA NC-W 315 ROTA NC-WF 315 THW 250F THW 250R THW 265F THW 265R THW 315R	RMG 250 KNCS 250 KNCS 260 KNCS 315 KNCS 260-71 KNCS 315-91 KNCS-N 260-72 KNCS-N 315-91 HG 250/315 HG-F 260/315 HG-N 260/315
F 315 KTNC 360 KTNC 400 KTNCV 400 UNC 400 FNC 400 F+315	MX 380		DURO 315 DURO NC 315 DURO NCE 400	ROTA-G 400 ROTA-S 315 ROTA-S plus 315 ROTA NC-W 400 THW 315F THW 400F THW 400R	RMG-315 KNCS 400 KNCS 400-120 KNCS-N 400-128 HG 400 KNC 400 HG-N400
F 400/500L UNC 500 KTNC 500 KTNC 630 KTNCV 500 KTNCV 630 FNC 500/630 F+400			DURO 400 DURO NC 400 DURO 500 DURO NC 500 DURO NCE 500	ROTA-S 400 ROTA-S plus 400 ROTA-G 500 ROTA-S 500 ROTA-S plus 500 THW 500F THW 500R THW 630R	HG 500 HG 630 HG-F 400/500 HG-N 500/600 KNCS 500 KNCS 630 KNCS 500-160 KNCS 630/160 KNCS-N 500-165 KNCS-N 630-165 KNCS 800-160
F 630 F+630			DURO NC 630 DURO 630	ROTA-G 630 ROTA-S 630 ROTA-S plus 630	HG-F 630

TECHLEADER® TOOLING INC.

Slot/Tenon

Diamond & Aluminum Top Jaws

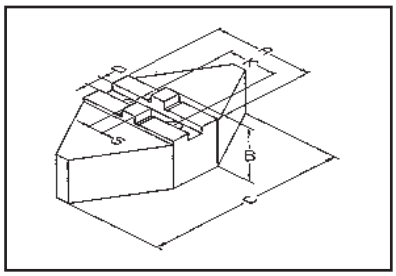

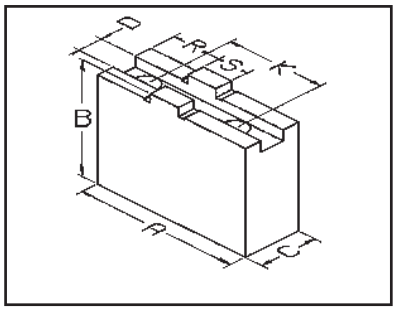

To Suit Quick Jaw Change Chucks

Material: Steel: 080M15
Material: Aluminum HE30TF
Black Finish

Diamond Top Jaws

Techleader Part No.	A	B	C	D	K	S	Bolt	Weight KG/ set
CQ 16 STEEL	60	60	120	8	32	18	M8	9.0
HT 16 ALUMINUM	64	64	120					3.8
CQ 20 STEEL	76	64	150	10	40	20	M8	14.0
HT 20 ALUMINUM	76	64	150					5.9
CQ 25 STEEL	89	64	170	12	40	20	M12	20.0
HT 25 ALUMINUM	89	64	170					8.4
CQ 32 STEEL	118	76	240	12	54	26	M12	28.0
HT 32 ALUMINUM	118	76	240					10.5

Aluminum Top Jaws

Techleader Part No.	A	B	C	D	K	R	S	Bolt	Weight KG/ set
CW 16	85	50	25	8	32	25	18	M8	0.7
CW 20	105	50	25	10	40	34	20	M8	0.9
CW 25	125	60	40	12	40	36	20	M12	2.0
CW 32	145	60	40	12	54	45	26	M12	2.4
CW 40	180	80	50	18	60	50	30	M16	5.1

TECHLEADER® TOOLING INC.

Slot/Tenon

Diamond & Aluminum Top Jaws

To Suit Forkardt, Gamet, Kitagawa, Rohm, Schunk & SMW-Autoblok Quick Change Chucks

Forkardt	Gamet	Kitagawa	Rohm	Schunk	SMW-Autoblok
F 160 KTNC 160 KTNCV 175 KTNCV 160 FNC 175	MX 152 MX 175		DURO 160 DURO NC 160 DURO NC 175 DURO NCE160	ROTA-G 160 ROTA-S 160 ROTA-S plus 160 ROTA NC-W185 THW 165 R	RMG 160 KNCS 160 KNCS 175 KNCS 170-43 KNCS-N 170-43 KNSP 160 HG 160 HG-F 160 HG-N 160
F 200 KTNC 200 KTNCV 200 FNC 200	MX 215	QJ 8	DURO 200 DURO NC 200 DURO NCE 200	ROTA-G 200 ROTA-S 200 ROTA-S plus 200 ROTA NC-WF 210 ROTA NC-W 225 THW 210 F THF 210 R	RMG 200 HG-F 210 HG 200 HG-N 210 KNSP 200 KNCS 200 KNCS 225 KNCS 210-52 KNCS-N 210-52 KNCS-N 225-65
F 250 KTNC 250 KTNC 280 KTNC 315 KTNCV 250 KTNCV 315 UNC 250/315 FNC 250/315	MX 252 MX 315 MX 330	QJ10 QJ 12	DURO 250 DURO NC 250 DURO NCE 250 DURO NCE 315	ROTA-G 250 ROTA NC-WF 250 ROTA-S 250 ROTA-S plus 250 ROTA NCW 265 ROTA-G 315 ROTA NC-W 315 ROTA NC-WF 315 THW 315R THW 250 F/250 R THW 265 F/265 R	RMG 250 KNCS 250 KNCS 260 KNCS 260-71 KNCS 315 KNCS 315-91 KNCS-N 260-72 KNCS-N 315-91 HG 250/315 HG-F 260/315 HG-N 260/315
F 315 KTNC 360 KTNC 400 KTNCV 400 UNC 400 FNC 400	MX 380		DURO 315 DURO NC 315 DURO NCE 315	ROTA-G 400 ROTA-S 315 ROTA-S plus 315 ROTA NC-W 400 THW 315 F/400 F THW 400 R	RMG 315 KNCS 400 HG 400 KNC 400 KNCS 400-120 KNCS-N 400-128 HG-N 400

Aluminum Top Jaws

Forkardt	Gamet	Kitagawa	Rohm	Schunk	SMW-Autoblok
F 160 KTNC 160 KTNCV 175 KTNCV 160 FNC 175	MX 152 MX 175		DURO 160 DURO NC 160 DURO NC 175 DURO NCE160	ROTA-G 160 ROTA-S 160 ROTA-S plus 160 KNCS 170-43 THW 165 R KNSP 160 HG 160	RMG 160 KNCS 160 KNCS 175 KNCS 170-43 KNCS-N 170-43 KNSP 160 HG 160 HG-F 160 HG-N 160
F 200 KTNC 200 KTNCV 200 FNC 200	MX 215	QJ 8	DURO 200 DURO NC 200 DURO NCE 200	ROTA-G 200 ROTA-S 200 ROTA-S plus 200 ROTA NC-WF 210 ROTA NC-W 225 THW 210 F THF 210 R KNCS 210-52 KNCS-N 210-252	RMG 200 HG-F 210 HG 200 HG-N 210 KNSP 200 KNCS 200 KNCS 225 KNCS 210-52 KNCS-N 210-52 KNCS-N 225-65
F 250 KTNC 250 KTNC 280 KTNC 315 KTNCV 250 KTNCV 315 UNC 250/315 FNC 250/315	MX 252 MX 315 MX 330	QJ10 QJ 12	DURO 250 DURO NC 250 DURO NCE 250 DURO NCE 315	ROTA-G 250 ROTA NC-WF 250 ROTA-S 250 ROTA-S plus 250 ROTA NC-W 265 ROTA-G 315 ROTA NC-W 315 ROTA NC-WF 315 THW 315R THW 250 F/250 R THW 265 F/265 R	RMG 250 KNCS 250 KNCS 260 KNCS 260-71 KNCS 315 KNCS 315-91 KNCS-N 260-72 KNCS-N 315-91 HG 250/315 HG-F 250/315 HG-N 260/315
F 315 KTNC 360 / 400 KTNCV 400 FNC 400 UNC 400	MX 380		DURO 315 DURO NC 315 DURO NCE 400	ROTA-G 400 ROTA-S 315 ROTA-S plus 315 ROTA NC-W 400 THW 315 F/400 F THW 400 R	RMG 315 KNCS 400 HG 400 KNC 400 KNCS 400-120 KNCS-N 400-128 HG-N 400
F 400/500L UNC 500 KTNC 500 KTNC 630 KTNCV 500/630 FNC 500/630			DURO 400 DURO NC 400 DURO 500 DURO NC 500 DURO NCE 500		HG 500 HG-F 400/500 HG 630 KNCS 500 HG-N 500/600 HG 630 KNCS 500 KNCS 630 KNCS 500-160 KNCS-N 500-165 KNCS 630-160 KNCS-N 630-165

TECHLEADER® TOOLING INC.

Slot/Tenon Soft Top Jaws

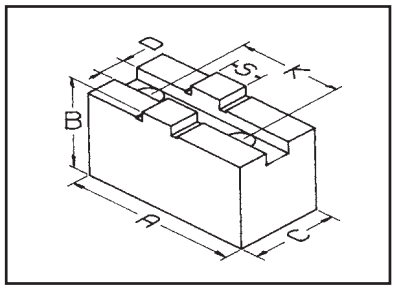

For Manual and Power Operated Chucks

AMERICAN STANDARD BASE JAWS

Techleader Part No.	Chuck Diameter	A	B	C	D	K	S	Bolt Size
DM13	5"	2.18"	1.37"	0.75"	0.313"	1.250"	0.436"	5/16"
DM16	6"	2.81"	1.37"	1.00"	0.313"	1.500"	0.499"	3/8"
DM16L	6"	3.25"	1.37"	1.00"	0.313"	1.500"	0.499"	3/8"
DM20	8"	3.31"	1.87"	1.25"	0.313"	1.750"	0.499"	3/8"
DM20L	8"	3.75"	1.88"	1.25"	0.313"	1.750"	0.499"	3/8"
DM25	10"	3.94"	1.87"	1.50"	0.501"	2.125"	0.749"	1/2"
DM25L	10"	4.62"	1.88"	1.50"	0.501"	2.125"	0.749"	1/2"
DM32	12"	4.50"	2.12"	1.75"	0.501"	2.500"	0.749"	1/2"
DM32L	12"	5.37"	2.13"	1.75"	0.501"	2.500"	0.749"	1/2"
DM38	15"	5.18"	2.25"	1.75"	0.501"	3.000"	0.749"	5/8"
DM38L	15"	6.25"	2.25"	1.75"	0.501"	3.000"	0.749"	5/8"
DM46	18"	5.18"	2.75"	2.25"	0.501"	3.000"	0.749"	3/4"
DM46L	18"	6.37"	2.75"	2.25"	0.501"	3.000"	0.749"	3/4"

TECHLEADER® TOOLING INC.

Adjustagrip Hard Top Jaws

For Slot/Tenon Quick Jaw Change Chucks

FOR SPECIAL SIZE ADJUSTAGRIP JAWS AND FOR CHUCK TYPES NOT LISTED

If the standard listed type is not suitable, please fill in the drawing details below and return to us for a quotation.

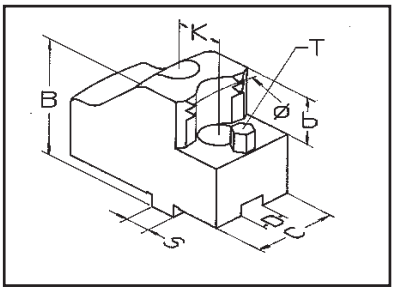

EXTERNAL GRIPPING

CHUCK MAKE AND TYPE:

B	
C	
D	
K	
S	
b	
Ø	

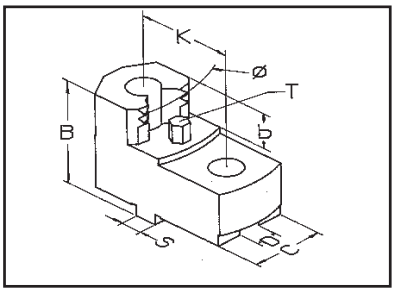

INTERNAL GRIPPING

CHUCK MAKE AND TYPE:

B	
C	
D	
K	
S	
b	
Ø	

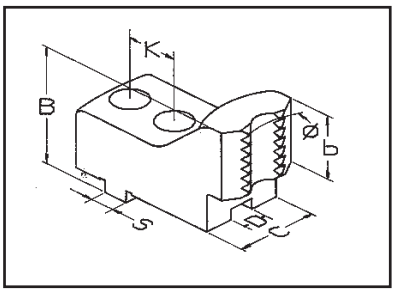

BAR GRIPPING

CHUCK MAKE AND TYPE:

B	
C	
D	
K	
S	
b	
Ø	

TECHLEADER® TOOLING INC.

Adjustagrip Hard Top Jaws

For Slot/Tenon Quick Jaw Change Chucks

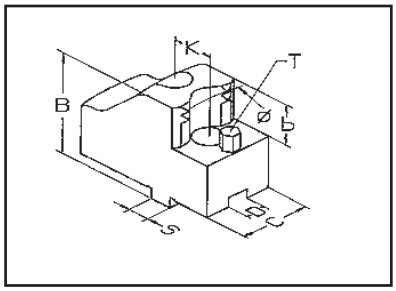

External Ø Clamping Type
Material: Steel: 590M17

Techleader Part No.	B	C	D	K	S	b	T	Weight KG/set
LY10	49	30	8	32	18	20	M6	1.3
LY 11								1.3
LY 12								1.2
LY 13								1.2
LY 14								1.1
LY 15								1.1
LY 16								1.4
LY 17								1.4
LY20	49	30	10	40	20	20	M6	1.3
LY 21								1.3
LY 22								1.2
LY 23								1.2
LY 24								1.2
LY 25								1.2
LY 30	59	40	12	40	20	25	M6	2.4
LY 31								2.4
LY 32								2.3
LY 33								2.3
LY 34								2.0
LY 35								2.0
LY 40	59	50	12	54	26	25	M8	4.0
LY 41								4.0
LY 42								3.2
LY 43								3.2
LY 50	78	50	18	60	30	33	M8	5.6
LY 51								5.6
LY 52								5.1
LY 53								5.1

These jaws suit the following quick jaw change chuck types:

BERG	**KHNC**
FORKARDT	**KTNC, KTNCS, KTNCV, FNC**
ROHM	**DURO NC**
SCHUNK	**THW**
SMW	**KNCS**
SMW-AUTOBLOK	**KNCS-N**

These jaws will also fit Gamet MX, Kitagawa QJ and Reishauer RHU chucks. Grip ranges are available on request. Internal and bar gripping type jaws are also available on request. A grip range table can be supplied if required.

TECHLEADER® TOOLING INC.

Adjustagrip Hard Top Jaws

For Slot/Tenon Quick Jaw Change Chucks

To Suit Schunk THW Chucks Material: Steel: 590M17

External Gripping

THW 165-37

GRIP RANGE Ø	Max Swing	Pos	Part No.
29-33	182	1	LY10
33-37			LY11
37-41			LY10
41-46			LY11
46-50			LY10
50-54			LY11
54-60			LY12
60-64			LY13
64-69			LY12
69-73			LY13
73-78			LY12
78-82			LY13
81-85			LY14
85-90			LY15
90-95			LY14
95-99			LY15
99-104			LY14
104-108			LY15
109-113			LY14
113-118			LY15
118-124	194	1	LY16
124-128			LY17
128-133			LY16
133-137			LY17
137-142			LY16
142-147			LY17
147-151			LY16
151-156			LY17
155-160	212	2	LY16
160-165			LY17
165-169			LY16
169-174			LY17

THW 210-52

GRIP RANGE Ø	Max Swing	Pos	Part No.
27-30	247	1	LY20
30-32			LY21
31-37			LY20
36-41			LY21
40-45			LY20
44-50			LY21
49-54			LY20
53-59			LY21
58-63			LY20
62-68			LY21
67-73			LY20
71-77			LY21
76-81			LY23
80-86			LY22
85-91			LY23
89-95			LY22
94-100			LY23
99-105			LY22
103-109			LY23
107-113			LY25
112-118			LY24
116-122			LY25
121-127			LY24
125-131			LY25
130-136			LY24
135-141			LY25
140-146	232	2	LY24
145-150			LY25
149-155			LY24
154-160			LY25
159-165			LY24
163-169			LY25
168-174			LY24
173-179			LY25

THW 250-65

GRIP RANGE Ø	Max Swing	Pos	Part No.
33-38	296	1	LY30
37-42			LY31
41-47			LY30
46-52			LY31
51-57			LY30
56-62			LY31
61-67			LY30
66-72			LY31
71-78			LY30
77-83			LY31
82-88			LY30
87-94			LY31
92-98			LY33
98-104			LY32
103-109			LY33
108-115			LY32
114-120			LY33
119-126			LY32
124-131			LY33
128-135			LY35
134-140			LY34
139-146			LY35
145-151			LY34
150-157			LY35
156-162			LY34
161-167			LY35
166-173			LY34
172-178			LY35
175-182	360	2	LY34
181-187			LY35
186-193			LY34
192-198			LY35
197-204			LY34
203-209			LY35
208-215			LY34
214-220			LY35
219-226			LY34
224-231			LY35
230-237			LY34
235-242			LY35

THW 265-71

GRIP RANGE Ø	Max Swing	Pos	Part No.
33-38	307	1	LY30
37-42			LY31
41-47			LY30
46-52			LY31
51-57			LY30
56-62			LY31
61-67			LY30
66-72			LY31
71-78			LY30
77-83			LY31
82-88			LY30
87-94			LY31
93-99			LY30
98-104			LY31
103-109			LY33
108-115			LY32
114-120			LY33
119-126			LY32
124-131			LY33
130-136			LY32
135-142			LY33
139-146			LY35
145-151			LY34
150-157			LY35
156-162			LY34
161-167			LY35
166-173			LY34
172-178			LY35
177-184			LY34
183-189			LY35
186-193	371	2	LY34
192-198			LY35
197-204			LY34
203-209			LY35
208-215			LY34
214-220			LY35
219-226			LY34
224-231			LY35
230-237			LY34
235-242			LY35
241-248			LY34
246-253			LY35

THW 315-86

GRIP RANGE Ø	Max Swing	Pos	Part No.
36-42	345	1	LY30
41-47			LY31
46-52			LY30
50-56			LY31
56-62			LY30
61-67			LY31
66-72			LY30
71-77			LY31
76-83			LY30
81-88			LY31
87-93			LY30
92-98			LY31
98-104			LY30
103-109			LY31
108-115			LY30
114-120			LY31
118-125			LY33
124-130			LY32
129-136			LY33
135-141			LY32
140-147			LY33
146-152			LY32
151-158			LY33
155-162			LY35
161-167			LY34
166-172			LY35
171-178			LY34
177-183			LY35
182-189			LY34
188-194			LY35
193-200			LY34
199-205			LY35
204-211	433	2	LY34
210-216			LY35
215-222			LY34
221-227			LY35
226-233			LY34
231-238			LY35
237-244			LY34
242-249			LY35
248-255			LY34
253-260			LY35
259-266			LY34
264-271			LY35
270-276			LY34
275-282			LY35
281-287			LY34
286-293			LY35

THW 400-120

GRIP RANGE Ø	Max Swing	Pos	Part No.
55-61	313	1	LY40
61-67			LY41
65-71			LY40
71-77			LY41
75-81			LY40
81-87			LY41
85-91			LY40
91-98			LY41
95-101			LY40
101-108			LY41
106-112			LY40
112-119			LY41
116-123			LY40
123-129			LY41
127-133			LY40
133-140			LY41
138-144			LY40
144-151			LY41
148-156			LY40
155-162			LY41
159-166			LY40
166-172			LY41
170-176			LY42
176-183			LY43
181-187			LY42
187-194			LY43
192-198			LY42
198-205			LY43
202-209			LY42
209-216			LY43
213-220			LY42
220-227			LY43
224-231			LY42
231-238			LY43
235-242			LY42
242-249			LY43
246-253			LY42
253-260			LY43
257-264			LY42
264-270			LY43
268-274			LY42
274-281			LY43
279-286			LY42
286-292			LY43
291-297	498	2	LY42
297-304			LY43
302-308			LY42
308-315			LY43
313-319			LY42
319-326			LY43
324-330			LY42
330-337			LY43
335-342			LY42
342-348			LY43
346-352			LY42
352-359			LY43
356-363			LY42
363-370			LY43

BASE JAW POSITION

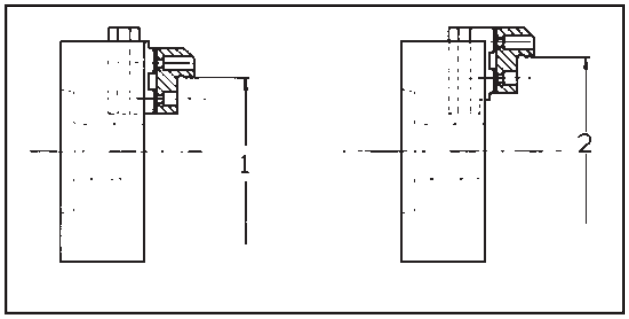

TECHLEADER® TOOLING INC.

Adjustagrip Hard Top Jaws

For Slot/Tenon Quick Jaw Change Chucks

To Suit SMW KNCS Chucks Material: Steel: 590M17

EXTERNAL GRIPPING

KNCS 140-32

GRIP RANGE Ø	Max Swing	Pos	Part No.
27-30	162	1	LY10
30-34			LY11
34-38			LY10
38-42			LY11
42-47			LY10
47-51			LY11
51-56			LY12
56-61			LY13
61-65			LY12
65-70			LY13
70-74			LY12
74-78			LY13
78-82			LY14
82-86			LY15
86-91			LY14
91-96			LY15
96-100			LY14
100-105			LY15
105-110			LY14
110-115			LY15
115-121	190	1	LY16
121-125			LY17
125-129			LY16
129-134			LY17
134-139			LY16
139-143			LY17
143-148			LY16
148-151			LY17

KNCS 160-32

GRIP RANGE Ø	Max Swing	Pos	Part No.
27-31	177	1	LY10
31-34			LY11
34-39			LY10
39-43			LY11
43-47			LY10
47-52			LY11
52-57			LY12
57-61			LY13
61-66			LY12
66-70			LY13
70-75			LY12
75-78			LY13
78-82			LY14
82-87			LY15
87-91			LY14
91-96			LY15
96-101			LY14
101-105			LY15
105-110			LY14
110-115			LY15
115-120	190	1	LY16
120-125			LY17
125-130			LY16
130-134			LY17
134-139			LY16
139-144			LY17
144-148	208	2	LY16
148-152			LY17
152-157			LY16
157-161			LY17
161-166			LY16
166-170			LY17

KNCS 175-40

GRIP RANGE Ø	Max Swing	Pos	Part No.
27-30	186	1	LY10
30-33			LY11
32-37			LY10
36-41			LY11
41-46			LY10
45-50			LY11
49-54			LY10
54-59			LY11
59-64			LY12
63-68			LY13
68-73			LY12
72-78			LY13
77-82			LY12
81-87			LY13
85-90			LY14
89-94			LY15
94-99			LY14
98-104			LY15
103-108			LY14
108-113			LY15
112-118			LY14
117-123			LY15
123-128	199	1	LY16
127-133			LY17
132-137			LY16
137-142			LY17
141-147			LY16
146-151			LY17
151-156			LY16
155-161			LY17
159-165	217	2	LY16
164-169			LY17
169-174			LY16
173-179			LY17

KNCS 200-41

GRIP RANGE Ø	Max Swing	Pos	Part No.
30-35	235	1	LY20
34-39			LY21
38-43			LY20
42-48			LY21
47-52			LY20
51-57			LY21
56-61			LY20
60-66			LY21
65-70			LY23
69-75			LY22
74-79			LY23
78-84			LY22
83-88			LY23
87-93			LY22
92-97			LY23
96-101			LY25
100-106			LY24
105-110			LY25
110-115			LY24
114-120			LY25
119-125			LY24
124-129			LY25
129-134	273	2	LY24
133-139			LY25
138-144			LY24
143-148			LY25
147-153			LY24
152-157			LY25
157-162			LY24
161-167			LY25

KNCS 250-52

GRIP RANGE Ø	Max Swing	Pos	Part No.
38-43	291	1	LY30
42-48			LY31
47-53			LY30
52-58			LY31
57-63			LY30
62-68			LY31
67-73			LY30
72-79			LY31
78-84			LY30
83-89			LY31
88-94			LY33
93-99			LY32
98-105			LY33
104-110			LY32
109-116			LY33
115-121			LY32
120-126			LY33
124-130			LY35
129-136			LY34
135-141			LY35
140-147			LY34
145-152			LY35
151-158			LY34
156-163			LY35
162-168			LY34
167-174			LY35
171-177	355	2	LY34
176-183			LY35
182-188			LY34
187-194			LY35
193-199			LY34
198-205			LY35
204-210			LY34
209-216			LY35
215-221			LY34
220-226			LY35
225-232			LY34
231-237			LY35

INTERNAL GRIPPING
Available on request

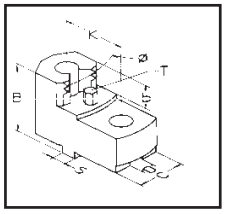

BAR GRIPPING
Available on request

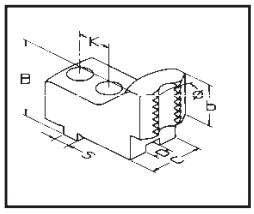

WORKPIECE HEIGHT PINS

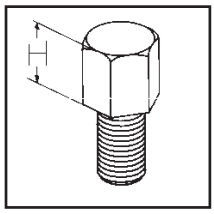

BASE JAW POSITION

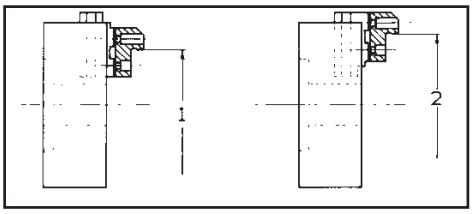

TECHLEADER® TOOLING INC.

Adjustagrip Hard Top Jaws

For Slot/Tenon Quick Jaw Change Chucks

To Suit SMW KNCS Chucks Material: Steel: 590M17

EXTERNAL GRIPPING

KNCS 260-65

GRIP RANGE Ø	Max Swing	Pos	Part No.
38-43	302	1	LY30
42-48			LY31
47-53			LY30
52-58			LY31
57-63			LY30
62-68			LY31
67-73			LY30
72-79			LY31
78-84			LY30
83-89			LY31
88-95			LY30
93-100			LY31
98-105			LY33
104-110			LY32
109-116			LY33
115-121			LY32
120-126			LY33
125-132			LY32
131-137			LY33
135-141			LY35
140-147			LY34
145-152			LY35
151-158			LY34
156-163			LY35
162-168			LY34
167-174			LY35
173-179			LY34
178-185			LY35
182-188	366	2	LY34
187-194			LY35
193-199			LY34
198-205			LY35
204-210			LY34
209-216			LY35
215-221			LY34
220-226			LY35
225-232			LY34
231-237			LY35
236-243			LY34
242-248			LY35

KNCS 315-77

GRIP RANGE Ø	Max Swing	Pos	Part No.
36-42	344	1	LY30
40-46			LY31
45-51			LY30
50-56			LY31
55-61			LY30
60-67			LY31
65-72			LY30
71-77			LY31
76-82			LY30
81-88			LY31
86-93			LY30
92-98			LY31
97-104			LY30
102-109			LY31
108-115			LY30
113-120			LY31
118-125			LY33
124-130			LY32
129-136			LY33
134-141			LY32
140-146			LY33
145-152			LY32
151-157			LY33
155-161			LY35
160-167			LY34
165-172			LY35
171-178			LY34
176-183			LY35
182-189			LY34
187-194			LY35
193-200			LY34
198-205			LY35
204-211	432	2	LY34
209-216			LY35
215-221			LY34
220-227			LY35
226-232			LY34
231-238			LY35
237-243			LY34
242-249			LY35
248-254			LY34
253-260			LY35
259-265			LY34
264-271			LY35
269-276			LY34
275-282			LY35
280-287			LY34
286-293			LY35

KNCS 315-91

GRIP RANGE Ø	Max Swing	Pos	Part No.
46-52	356	1	LY30
51-57			LY31
56-52			LY30
61-67			LY31
66-73			LY30
71-78			LY31
77-83			LY30
82-88			LY31
87-94			LY30
93-99			LY31
98-105			LY30
103-110			LY31
109-115			LY30
114-121			LY31
120-126			LY30
125-131			LY31
130-136			LY33
135-142			LY32
141-147			LY33
146-153			LY32
152-158			LY33
157-164			LY32
162-169			LY33
166-173			LY35
172-179			LY34
177-184			LY35
183-189			LY34
188-195			LY35
194-200			LY34
199-206			LY35
205-211			LY34
210-217			LY35
216-222	444	2	LY34
221-228			LY35
227-233			LY34
232-239			LY35
238-244			LY34
243-250			LY35
249-255			LY34
254-261			LY35
260-266			LY34
265-271			LY35
270-277			LY34
276-282			LY35
281-288			LY34
287-293			LY35
292-299			LY34
298-304			LY35

KNCS 400-92

GRIP RANGE Ø	Max Swing	Pos	Part No.
54-60	419	1	LY40
60-66			LY41
63-70			LY40
70-76			LY41
73-80			LY40
80-86			LY41
83-90			LY40
90-97			LY41
94-101			LY40
100-107			LY41
104-111			LY40
111-118			LY41
115-122			LY40
122-129			LY41
125-132			LY40
132-139			LY41
136-143			LY40
143-150			LY41
147-154			LY40
154-161			LY41
158-165			LY40
165-172			LY41
168-176			LY42
175-182			LY43
179-186			LY42
186-193			LY43
190-197			LY42
197-204			LY43
201-208			LY42
208-215			LY43
212-219			LY42
219-226			LY43
223-230			LY42
230-237			LY43
234-241			LY42
241-248			LY43
245-252			LY42
252-259			LY43
256-263			LY42
263-270			LY43
266-274			LY42
273-281			LY43
277-285			LY42
284-292			LY43
289-297	497	2	LY42
296-303			LY43
300-307			LY42
307-314			LY43
311-318			LY42
318-325			LY43
322-329			LY42
329-336			LY43
333-340			LY42
340-347			LY43
344-351			LY42
351-358			LY43
355-362			LY42
362-369			LY43

KNCS 500-128

GRIP RANGE Ø	Max Swing	Pos	Part No.
87-99	515	1	LY50
95-104			LY51
102-112			LY50
108-118			LY51
116-125			LY50
122-131			LY51
129-139			LY50
135-145			LY51
143-153			LY50
149-158			LY51
157-166			LY50
164-174			LY52
171-181			LY53
178-188			LY52
185-194			LY53
191-201			LY52
198-208			LY53
205-215			LY52
212-222			LY53
219-229			LY52
226-236			LY53
233-243			LY52
243-253	637	2	LY52
250-260			LY53
257-267			LY52
264-274			LY53
271-281			LY52
278-288			LY53
285-294			LY52
291-301			LY53
298-308			LY52
305-315			LY53
312-322	637	2	LY52
319-329			LY53
326-336			LY52
333-343			LY53
340-350			LY52
347-357			LY53
354-364			LY52
361-371			LY53
368-378			LY52
375-385			LY53
382-392			LY52
389-399			LY53

BASE JAW POSITION

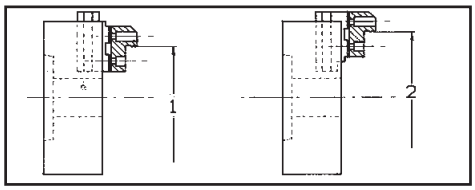

TECHLEADER® TOOLING INC.

Adjustagrip Hard Top Jaws

For Slot/Tenon Quick Jaw Change Chucks

To Suit SMW-Autoblok KNCS-N Chucks Material: Steel: 590M17

EXTERNAL GRIPPING

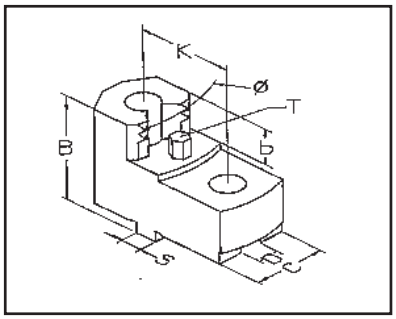

INTERNAL GRIPPING

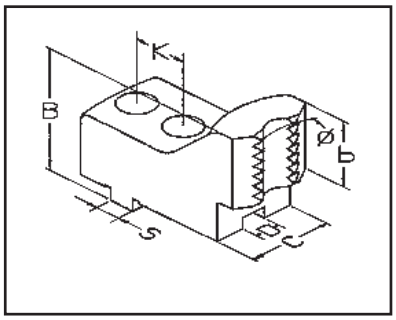

BAR GRIPPING

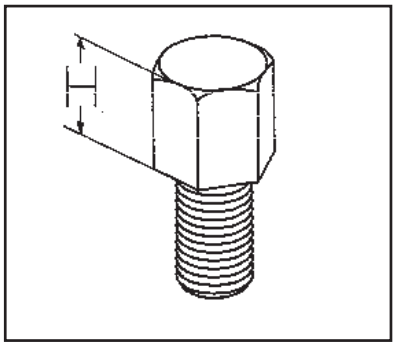

WORKPIECE HEIGHT PINS

KNCS-N 315-91

GRIP RANGE Ø	Max Swing	Pos	Part No.
46-52	356	1	LY30
50-57			LY31
56-62			LY30
61-67			LY31
66-72			LY30
71-78			LY31
76-83			LY30
81-88			LY31
87-94			LY30
92-99			LY31
98-104			LY30
103-110			LY31
108-115			LY30
114-120			LY31
119-126			LY30
124-131			LY31
128-135			LY34
133-140			LY35
139-146			LY34
144-151			LY35
150-157			LY34
155-162			LY35
161-167			LY34
166-173			LY35
171-178			LY34
177-184			LY35
182-189			LY34
188-195			LY35
193-200			LY34
199-206			LY35
204-211			LY34
210-217			LY35
215-222	444	2	LY34
221-227			LY35
226-233			LY34
231-238			LY35
237-244			LY34
242-249			LY35
248-255			LY34
253-260			LY35
259-266			LY34
264-271			LY35
270-277			LY34
275-282			LY35
281-288			LY34
286-293			LY35
292-299			LY34
297-304			LY35

KNCS-N 400-128

GRIP RANGE Ø	Max Swing	Pos	Part No.
67-74	446	1	LY40
74-80			LY41
77-84			LY40
84-91			LY41
88-94			LY40
94-101			LY41
98-105			LY40
105-112			LY41
108-116			LY40
115-122			LY41
119-126			LY40
126-133			LY41
130-137			LY40
137-144			LY41
140-148			LY40
147-155			LY41
151-158			LY40
158-165			LY41
162-169			LY40
169-176			LY41
173-180			LY40
180-187			LY41
184-191			LY40
191-198			LY41
195-202			LY42
201-209			LY43
205-213			LY42
212-220			LY43
216-224			LY42
223-231			LY43
227-235			LY42
234-241			LY43
238-245			LY42
245-252			LY43
249-256			LY42
256-263			LY43
260-267			LY42
267-274			LY43
271-278			LY42
278-285			LY43
282-289			LY42
289-296			LY43
293-300			LY42
300-307			LY43
304-311			LY42
311-318			LY43
317-324	525	2	LY42
324-331			LY43
328-335			LY42
335-342			LY43
339-346			LY42
346-353			LY43
350-357			LY42
357-364			LY43
361-368			LY42
368-375			LY43
372-379			LY42
379-386			LY43
383-390			LY42
390-397			LY43

KNCS-N 500-155

GRIP RANGE Ø	Max Swing	Pos	Part No.
87-98	636	1	LY50
94-103			LY51
102-111			LY50
107-117			LY51
115-124			LY50
121-130			LY51
128-138			LY50
134-144			LY51
142-152			LY50
148-157			LY51
156-165			LY50
163-173			LY52
170-180			LY53
177-187			LY52
184-193			LY53
190-200			LY52
197-207			LY53
204-214			LY52
211-221			LY53
218-228			LY52
225-235			LY53
232-242			LY52
239-249			LY53
246-256			LY52
253-263			LY53
260-270			LY52
267-277			LY53
274-284			LY52
281-290			LY53
288-297			LY52
294-304			LY53
301-311			LY52
308-318			LY53
318-328	836	2	LY51
326-336			LY53
333-343			LY52
340-350			LY53
347-357			LY52
354-364			LY53
361-371			LY52
368-378			LY53
375-385			LY52
382-392			LY53
389-399			LY52
396-406			LY53
403-413			LY52
410-420			LY53
417-427			LY52
424-434			LY53
431-441			LY52
438-448			LY53
445-455			LY52
452-462			LY53
459-469			LY52
466-476			LY53
473-483			LY52
480-490			LY53
487-497			LY52
494-504			LY53
501-511			LY52
508-518			LY53

TECHLEADER® TOOLING INC.

Slot/Tenon Hard Top Jaws

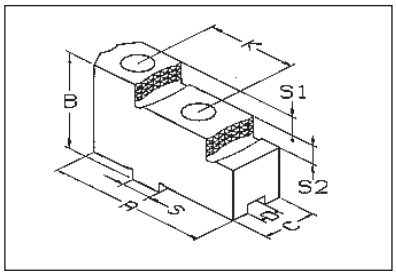

Material: Steel: 590M17

Hard Reversible Jaws for Quick Jaw Change Chucks

Techleader Part No.	A	B	C	D	K	S	T	Bolt Type	Weight Kg/Set
GX 16	63	36.5	20	8	32	18	7.5	M8	0.6
GX 20	72	42	22	10	40	20	10	M8	0.8
GX 25	90	55	30	12	40	20	14	M12	1.9
GX 32	105	62	36	12	54	26	15	M12	3.2
GX 40	130	80	45	18	60	30	20	M16	10.8

TECHLEADER® TOOLING INC.

Slot/Tenon Hard Top Jaws

To suit Forkardt, Gamet, Kitagawa, Rohm, Schunk & SMW-Autoblok Quick Jaw Change Chucks

Forkardt	Gamet	Kitagawa	Rohm	Schunk	SMW-Autoblok
F 160 KTNC 160 KTNCV 175 KTNCV 160 FNC 175	MX 152 MX 175		DURO 160 DURO NC 160 DURO NC 175 DURO NCE160	THW 165-37-R ROTA-S 160 ROTA-S plus 160 ROTA-G 160 ROTA NC-W 185	RMG 160 HG 160 HG-F 160 KNCS 160 KNCS 175 KNCS 170-43 KNCS-N 170-43 KNSP 160 HG-N 160 KNC 160
F 200 KTNC 200 KTNCV 200 FNC 200	MX 215	QJ 8	DURO 200 DURO NC 200 DURO NCE 200 DURO NC 225	THW 210 F THW 210 R ROTA-S 200 ROTA-S plus 200 ROTA-G 200 ROTA NC-WF 210 ROTA NC-W 225	RMG 200 HG-F 160 HG 200 HG-N 210 KNSP 200 KNCS 200 KNCS 225 KNCS 210-52 KNCS-N 210-52 KNCS-N 225-65
F 250 KTNC 250 KTNC 280 KTNC 315 KTNCV 250 KTNCV 315 UNC 250/315 FNC 250/315	MX 252 MX 315 MX 330	QJ 10 QJ 12	DURO 250 DURO NC 250 DURO NCE 250 DURO NCE 315	THW 250-F THW 250-R THW 265-F THW 265-R THW 315-R ROTA-S 250 ROTA-S plus 250 ROTA-G 250 ROTA-G 315 ROTA NC-WF 250 ROTA NC-W 265 ROTA NC-W 315 ROTA NC-WF 315	RMG 250 KNCS 250 KNCS 260 KNCS 260-71 KNCS 315 KNCS 315-91 KNCS-N 260-72 KNCS-N 315-91 HG 250/315 HG-F 250/315 HG-N 260/315
F 315 KTNC 360 KTNC 400 KTNCV 400 UNC 400 FNC 400	MX 380		DURO 315 DURO NC 315 DURO NCE 400	THW 400 F THW 315 F THW 400 R ROTA-S 315 ROTA-S plus 315 ROTA-G 400 ROTA NC-W 400	RMG 315 KNCS 400 HG 400 KNC 400 KNCS 400-120 KNCS-N 400-128 HG-N 400
F 400/500 L UNC 500 KTNC 500 KTNC 630 KTNCV 500 KTNCV 630 FNC 500/630			DURO 400 DURO NC 400 DURO 500 DURO NC 500 DURO NCE 500	THW 500 F THW 630 R THW 500 R ROTA-S 400 ROTA-S plus 400 ROTA-S 500 ROTA-S plus 500	HG 500 HG-F 400/500 HG 630 HG-N 500/630 KNCS 500 KNCS 630 KNCS 500-160 KNCS 630-160 KNCS-N 500-165 KNCS-N 630-165 KNCS 800-160

TECHLEADER® TOOLING INC.

Slot/Tenon Hard Base Jaws

To Suit Quick Jaw Change Chucks

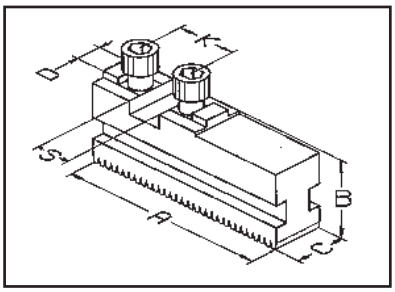

To suit Forkardt, Kitagawa, Rohm, SMW & Schunk Quick Jaw Change Chucks

Techleader Part No.	A	B	C	D	K	S	Bolt Type	Weight KG/set	Forkardt	Kitagawa	Schunk	Rohm	SMW
MFG 160	74	27	20	8	32	18	M8	0.8	F 160 F+160 KTNC 160 KTNCV 175 FNC 175		Rota-S 160 Rota-S plus 160	DURO 160 DURO NC 160 DURO NC 175 DURO NCE 160	HG-F160
MFG 200	90	32	22	10	40	20	M8	1.2	F 200 F+200 KTNC 200 KTNCV 200 FNC 200	QJ 08 QJ 210	THW 210-52F Rota-S 200 Rota-S plus 200 Rota NC-WF 210	DURO 200 DURO NC 200 DURO NCE 200 DURO NC 225	HG-F210
MFG 250	110	37	26	12	40	20	M12	2.0	F 250 F+250 UNC 250/315 KTNC 250/280/315 KTNCV 250/315 FNC 315	QJ 10 QJ 254 QJ 12 QJ 315	THW 250-65F THW 265-71F Rota-S 250 Rota-S plus 250 Rota NC-WF 250 Rota NC-WF 315	DURO 250 DURO NC 250 DURO NCE 250 DURO NCE 315	HG-F260
MFG 315	125	43	32	12	54	26	M12	3.3	F 315 F+315 UNC 400 KTNC 360/400 KTNCV 400 FNC 400		THW 315 F THW 400-120F Rota-S 315 Rota-S plus 315	DURO 315 DURO NC 315 DURO NCE 400	HG-F315
MFG 400	160	51	45	18	60	30	M16	7.3	F 400, F500L UNC 500 KTNC 500/630 KTNCV 500/630 FNC 500/630 F+400		THW 500-128 F Rota-S 400 Rota-S 500 Rota-S plus 400 Rota-S plus 500	DURO 400/500 DURO NC 400/500 DURO NCE 500	HG-F400 HG-F500

To suit SMW-Autoblok & Schunk Quick Jaw Change Chucks

Techleader Part No.	A	B	C	D	K	S	Bolt Type	Weight KG/set	SMW-Autoblok	Schunk
GBK 140	56	27.5	20	8	32	18	M8	0.6	KNCS 140 KNCS-N140	
GBK 160	65	27.5	20	8	32	18	M8	0.7	KNCS 160/125 KNSP 160 HG 160 RMG 160 KNCS-N-170	THW165-37R Rota-G 160 Rota NC-W 185
GBK 200	85	29.5	22	10	40	20	M8	1.0	KNCS 200 KNSP 200 HG 200 RMG 200 KNCS-N-210/225	THW210-52R Rota-G 200 Rota NC-W 225
GBK 250	104	37	26	12	40	20	M12	1.8	KNCS 250/260 HG 250 RMG 250 KNCS-N 260	THW250-65R THW265-71R Rota NC-W 265 Rota-G 250
GBK 315	115	43	32	12	40	20	M12	2.7	KNCS 315 HG 315 KNCS-N 315	THW315-86R Rota-G 315 Rota NC-W 400
GBK 400	125	43	32	12	54	26	M12	3.0	KNCS 400 HG 400 KNCS-N 400 RMG 315	THW400-120R Rota-G 400 Rota NC-W 400
GBK 500	160	57	45	18	60	30	M16	7.1	KNCS 500 HG 500 KNCS-N 500	THW500-128R Rota-G 500
GBK 630	200	57	45	18	60	30	M16	9.0	KNCS 630 HG 630 KNCS-N 630	THW630-128R

TECHLEADER® TOOLING INC.

Scroll Jaws Soft and Hard

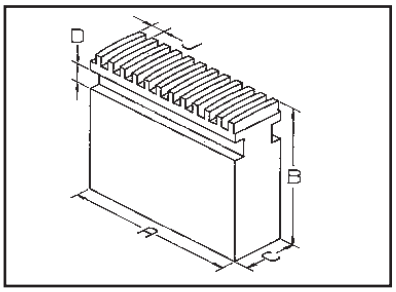

SOFT

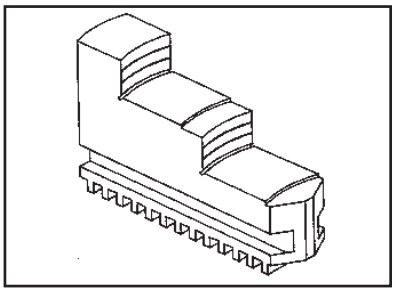

HARD OUTSIDE

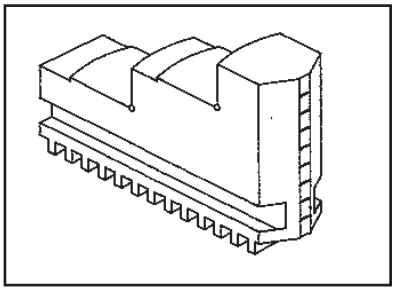

HARD INSIDE

For Manual Scroll Chucks

Material: Soft Jaws: 080M15

To suit Rohm ZS & ZG Scroll Chucks

Chuck Diameter	A	B	C	D	J	Weight Kg/Set	Techleader Part No.		
							SOFT JAWS	HARD INSIDE JAWS	HARD OUTSIDE JAWS
140/160	61	51	18	7	8	1.1	EH 16	AVAILABLE ON REQUEST	
200	69	57	20	8	8	1.6	EH 20		
250	90	70	24	10	10	3.0	EH 25		
315/350/400	130	76	34	15	10	7.2	EH 32		

To suit T de G Scroll Chucks

Chuck Diameter	A	B	C	D	J	Weight Kg/Set	Techleader Part No.		
							SOFT JAWS	HARD INSIDE JAWS	HARD OUTSIDE JAWS
85	34	25	12	5	4	0.3	FS 08	AVAILABLE ON REQUEST	
110	47	32	15	6.5	5	0.4	FS 10		
135	56	45	18	8	6	1.0	FS 14		
160	67	51	22	9	7	1.4	FS 16		
200	77	57	25	10.5	8	2.6	FS 20		
250	95	64	32	12.5	10	4.6	FS 25		
315	115	76	40	14	12	8.2	FS 32		
400	140	89	40	14	12	11.8	FS 40		

To suit Bison & Toolmex 3500, 3700 Scroll Chucks

Chuck Diameter	A	B	C	D	J	Weight Kg/Set	Techleader Part No.		
							SOFT JAWS	HARD INSIDE JAWS	HARD OUTSIDE JAWS
125	51	38	20	8	7	0.8	EN 13	AVAILABLE ON REQUEST	
160	70	51	20	8	8	1.3	EN 16		
200	85	57	25	10	8	2.5	EN 20		
250	105	70	28	12	9	4.2	EN 25		
315	127	76	32	12	10	6.3	EN 32		

To suit Pratt Burnerd Metric Scroll Chucks

Chuck Diameter	A	B	C	D	J	Weight Kg/Set	Techleader Part No.		
							SOFT JAWS	HARD INSIDE JAWS	HARD OUTSIDE JAWS
80	37	30	10	5	6	0.2	EK 08	AVAILABLE ON REQUEST	
100	42	35	14	7	6	0.4	EK 10		
125	53	38	16	7	6	0.7	EK 13		
160	68	45	18	7	6	1.2	EK 16		
200	78	57	22	8	8	2.1	EK 20		
250	100	70	25	8	8	3.8	EK 25		
315	124	75	32	12	10	6.3	EK 32		
400	154	89	32	12	12	9.5	EK 40		

To Suit Pratt Burnerd Standard Super Precision & Griptru Scroll Chucks

Chuck Diameter	A	B	C	D	J	Weight Kg/Set	Techleader Part No.		
							SOFT JAWS	HARD INSIDE JAWS	HARD OUTSIDE JAWS
80	32	32	9.40	4.85	4.24	0.2	EJB	AVAILABLE ON REQUEST	
100	41	35	14.10	4.85	5.08	0.4	EJC		
125	51	40	15.75	8.03	6.35	0.5	EJE		
160	70	44	18.79	8.03	6.35	1.2	EJG		
200	76	57	20.62	9.53	8.46	1.9	EJJ		
250	102	70	25.40	11.10	8.46	3.8	EJM		
315	114	70	28.19	12.88	8.46	4.7	EJP		
380	127	76	30.15	11.43	10.16	6.2	EJQ		
460/535/610	146	90	38.10	14.30	12.70	10.6	EJR		

TECHLEADER® TOOLING INC.

Soft Monoblock Jaws

To Suit Quick Jaw Change Chucks

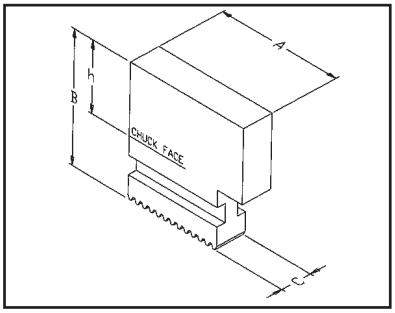

To Suit SMW-Autoblok, Reishauer & Schunk Quick Jaw Change Chucks

Techleader Part No	A	B	C	h	Weight KG/set	SMW-Autoblock	Reishauer	Schunk
UVB140	58	55.5	20	35	1.3	KNCS 140 KNCSN 140		
UVB170	65	55.5	20	35	1.4	KNCS 160 KNCS 175 kNCSN 170 KNSP 160 RMG 160 HG 160 HGN 160 KNCS-N170	RHU 160	THW 165 R Rota-G 160 Rota NC-W185
UVB200	77	65	22	40	2.0	KNCS 200 KNCSN 210 KNCSN 225 KNSP 200 RMG 200 HG 200 HGN 210	RHU 200	THW 210 R Rota-G 200 Rota NC-W225
UVB250	97	84	26	55	4.2	KNCS 250 KNCS 260 KNCSN 260 RMG 250 HG 250 HGN 260	RHU 250	THW 250 R THW 265 R Rota-G 250 Rota NC-W265
UVB315	118	90	32	56	6.6	KNCS 315 KNCSN 315 HG 315 HGN 315		THW 315 R Rota-G 315 Rota NC-W315
UVB 400	145	100	32	66	9.0	KNCS 400 KNCSN 400 RMG 315 HG 400 HGN 400	RHU 315	THW 400 R Rota-G 400 Rota NC-W400
UVB500	175	124	45	77	19.5	KNCS 500 KNCSN 500 HG 500 HGN 500		THW 500 R Rota-G 500
UVB600	230	134	45	87	27.5	KNCS 630 KNCSN 630 HG 630 HGN 630		THW 630 R

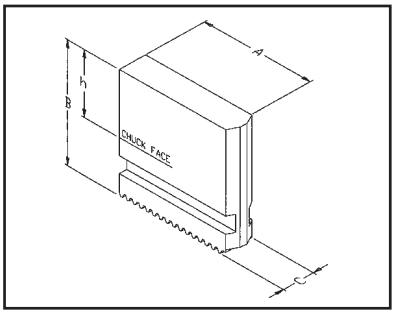

To Suit Forkardt, Rohm, SMW-Autoblok & Schunk Quick Jaw Change Chucks

Techleader Part No	A	B	C	h	Weight KG/set	Forkardt	Rohm	Schunk	SMW
FVB 170	79	45	20	24	1.4	F 160 F+160 KTNC 160 KTNCV 175 FNC 175	DURO 160 DURO-NC 160 DURO-NC 175 DURO-NCE 160	Rota-S 160 Rota-S plus 160	HGF 160
FVB 200 FVB 201	94 94	60 80	22 22	35 55	2.5 2.8	F 200 F+200 KTNC 200 KTNCV 200 FNC 200	DURO 200 DURO-NC 200 DURO-NCE 200	THW 210 F Rota-S 200 Rota-S plus 200 Rota NC-WF 210	HGF 210
FVB 250 FVB 251	115 115	70 100	26 26	40 75	4..3 4.8	F250 F+250 KTNC 250/280/315 KTNCV 250/315 UNC 250/315 FNC 250/315	DURO 250 DURO-NC 250 DURO-NCE 250/315	THW 250-F THW 266-F Rota-S 250 Rota-S plus 250 Rota NC-WF 250 Rota NC-WF 315	HG-F 260
FVB 315	140	81	32	46	7.3	F 315 F+315 KTNC 360/400 KTNCV 400 UNC 400 FNC 400	DURO 315 DURO-NC 315 DURO-NCE 400	THW 400 F Rota-S 315 THW 315 F Rota-S plus 315	HGF 315
FVB 400	176	93	45	53	15.8	F 400/500E F+400 KTNC 500/630 KTNCV 500/630 UNC 500 FNC 500/630	DURO 400/500 DURO NC 400/500 DURO NCE 500	THW 500 F Rota-S 400 Rota-S 500 Rota-S plus 400 Rota-S plus 500	HGF 400 HGF 500

TECHLEADER® TOOLING INC.

Monoblock
Hard Reversible Jaws
To Suit Quick Jaw Change Chucks

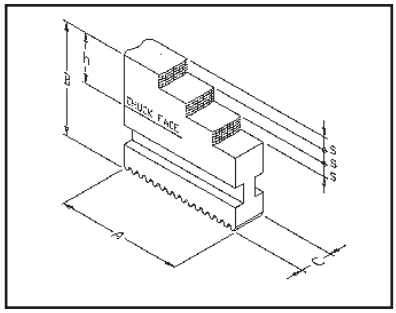

To Suit Forkardt, Rohm, SMW-Autoblok & Schunk Quick Jaw Change Chucks

Techleader Part No	A	B	C	S	h	Weight KG/set	Forkardt	Rohm	SMW	Schunk
FST 16	79	45	20	7.5	24	1.1	F 160 F+160 KTNCV 175 KTNC 160 FNC 175	DURO 160 DURONC 160/175 DURO-NCE 160	HG-F 160	Rota-S 160 Rota-S plus 160
FST 20	94	60	22	10	35	1.9	F 200 F+200 KTNCV 200 KTNC 200 FNC 200	DURO 200 DURO-NC 200 DURO-NCE 200	HG-F 210	THW 210 F Rota-S 200 Rota-S plus 200 Rota NC-WF 210
FST 25	114	70	26	14	40	3.4	F 250 F+250 KTNCV 250 KTNCV 315 KTNC 250/280 KTNC 315 FNC 250/315	DURO 250 DURO-NC 250 DURO-NCE 250 DURO-NCE 315	HGF-260	THW 250 F THW 265 F Rota-S 250 Rota-S plus 250 Rota NC-WF 250 Rota NC-WF 315
FST 31	130	81	32	15	46	5.4	F 315 F+315 KTNCV 400 KTNC 360-400 FNC 400	DURO 315 DURO-NC 315 DURO-NCE 400	HG-F 315	THW 400 F Rota-S 315 THW 315 F Rota-S plus 315
FST 40	167	93	45	20	52	11.0	F 400 F+400 F 500L KTNCV 500 KTNCV 630 KTNC 500/630 FNC 500/630	DURO 400 DURO-NC 400 DURO 500 DURO-NC 500 DURO-NCE 500	HG-F 400 HG-F 500	THW 500 F Rota-S 400 Rota-S 500 Rota-S plus 400 Rota-S plus 500

To Suit SMW-Autoblok & Schunk Quick Jaw Change Chucks

Techleader Part No	A	B	C	S	h	Weight Kg/Set	SMW-Autoblok	Schunk
GST 160-1 GST 160-2 GST 170	58 65	43.5 43.5	20 20	7 7	22 23	0.6 0.7	KNCS 140 KNCS 160 KNCSN 140 KNSP 160 RMG 160 HG 160 HGN 160 KNCS-N 176	THW 160R Rota-G 160 Rota NC-W185
GST 200 GST 210	75 84	51 51	22 22	8 8	26 26	1.2 1.3	KNCS 200 KNCSN 210 KNCSN 225 KNSP 200 RMG 200 HG 200 HGN 200	THW 210 R Rota-G 200 Rota NC-W225
GST 250	90	60	26	10	31	1.9	KNCS 250 KNCSN 260 RMG 250 HG 250 HGN 250	THW 250 R THW 265 R Rota-G 250 Rota NC-W265
GST 315	117	66	32	11	32	3.4	KNCS 315 KNCSN 315 HG 315 HGN 315	THW 315 R Rota-G 315 Rota NC-W315
GST 400	137	70	32	11	36	4.4	KNCS 400 KNCSN 400 RMG 315 HG 400 HGN 400	THW 400 R Rota-G 400 Rota NC-W400
GST 500	175	93	45	20	46	11.7	KNCS 500 KNCSN 500 HG 500 HGN 500 KNCS 630 KNCSN 630 HG 630 HGN 630	THW 500 R THW 600 R Rota-G 500

TECHLEADER® TOOLING INC.

T-Nuts

Power Chucks

To Suit Howa, Kitagawa, Samchully & Matsumoto (MMK)

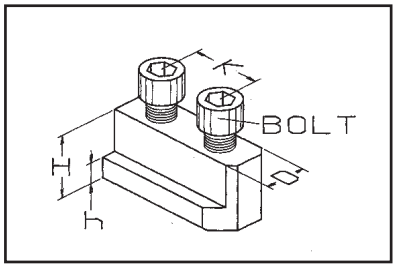

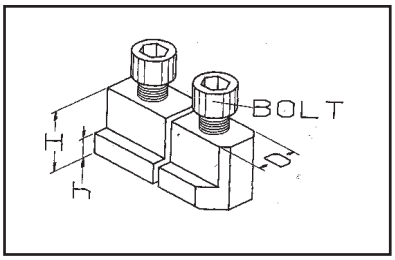

Material: Steel: 817M40
Blackened and Ground

Techleader Part No.	D	H	h	k	Bolt	Howa	Samchully	Kitagawa
GP 03	10	15	5.5	14	M8 x 20	H01MA4 H024M5	HS05	B204 B205
GP 04	8	13.5	4.5	15	M6 x 18			B-04 HOB 4
GR 04	11	16.5	6.5	16	M8 x 20	HO27M4 H027M5		
GP 05	10	18	5.5	18	M8 x 22			HOB-5 B-05
GP 06	12	21	7	20	M10 x 25	H01MA6 H015M6 H024M6 H047M6 H07MA6 H022M6 H037M6 H027M6 H023M8		HJA5-6 H06 N-160 AS165 B-160 HOB-6 HOS 6 HOH-160
GP 07	12	18.5	7.5	20	M10 x 25		HS06 HST06 HH206 HC06	B206 B-06 HOH 06 HG738-165 B-07 B-106 B-7 HOH 106 HOH 206
GP 08	14	23	8	25	M12 x 30	H01MA8 H07MA8 H02M8 H015M8		HJA 6-8 B-200 HOB 8 HOS 8 AS 210 HO 8 B-08 N-200 N8 HOH-08K
GP 09	14	20.5	8.2	25	M12 x 30		HS08 HST08 HH208 HC08 HHF208 HSF08	B-108 HOH-108 HG715-210 B 208 HOH 208
GR 10	16	26.5	8.5	25	M12 x 35	H07MA10 H015M10 H022M8 H024M8 H023M10 H027M8 H047M8 H037M8 H034M8		
GP 10	16	23	8	30	M12 x 30	H01MA10 H02M10		B-10 HOH-10 HOB-10 AS 250 N-280 HJA8-10 HOH 250 B-250 HO-10 HOS-10 HG 730-254
GP 11	16	21.5	8.5	30	M12 x 30		HS10 HST10 HC10 HSF10	B-210 HOH 210 B-110 HOH-110
GR 12	18	27.5	9.5	30	M14 x 35	H07MA12 H024M10 H023M12 H037M10 H022M10 H015M12 H027M10 H034M10		
GP 12	18	33	13.5	30	M14 x 45	H01MA12 H02M12		B-300 N-300 HOH-300 HLA6-12 B-12 N-12 HJA8-12 HO-12 HOB-12 HOS-12 HLA6-15 HOH-12 HLA8-15
GP 13	21	28	11.5	30	M16 x 35		HS12 HST12 HH212 HSF12	B-212 B-112 BT-212 HOH-112 HOH-212
GR 13	21	29	10.5	35	M16 x 35	H027M12 H037M12 H034M12 H047M12		
GP 15	22	45.5	16.5	43	M20 x 55		HAH15 HCHF15 HC15 HFC15 HAH18 HCHF18 HC18	B-15 B-380 B-450 HOB-15 HOH-15 HOH-380 B-18 HOB-18
GR 15	26	40	17	42	M20 x 45	H027M15 H047M15		
GP 21	25	45	19	60	M20 x 55			HS450 B530 HS530 HO321 B600 HOB24 H518 B21 HJ21 N21 B24 HS24 N24

Techleader Part No.	D	H	h	K	Bolt	Matsumoto (MMK)
GS 05	10	16.5	5.5	19	M8 x 20	SA5-6
GS 06*	11	20	7.5	-	M8 x 25	HA5-6 HH-6 HX-6 HJ-6 H-6 STC-6
GS 07	11			25		ZA5-6
GS 08*	14	25.5	9.6	-	M12 x 35	HA6-8 HJ-8 HX-8 HHJ-8 H-8 HH-8 STC-8
GS 09*	14	24.5	8.5	-	M12 x 35	ZA6-8
GS 10*	16	23	8	-	M12 x 30	HA8-10 H-10 HHJ-10 HH-10 HHL-10 HX-10 HJ-10 HA8-11 STC-10
GS 11	16			30		ZA8-10
GS 12*	18	30	14	-	M14 x 35	HA8-12 HJ-12 HX-12 HHJ-12 H-12 HH-12 HHL12
GS 13	18			32		ZA8-12

* Split nut type

TECHLEADER® TOOLING INC.

T-Nuts

To Suit Forkardt, Pratt Burnerd, Schunk & SMW Power Chucks

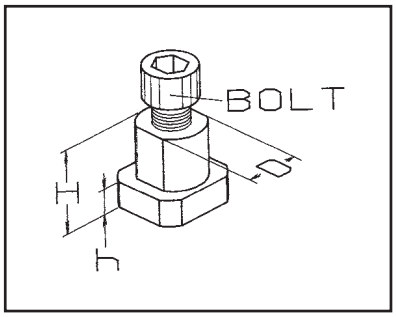

GN SINGLE

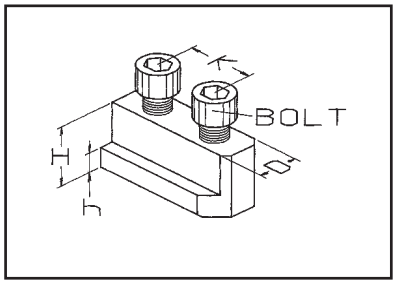

GG DOUBLE

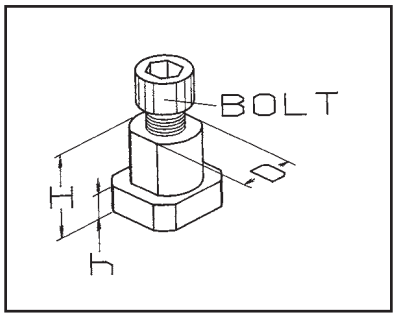

Techleader Part No.	D	H	h	k	Bolt	Forkardt	Pratt Burnerd	Schunk	SMW
GN 13	12	17	7		M8 x 20	3KTH 130-33 3KTH 140-37			KDV 130
GN 16 GG 20 GG 16	17 17 17	23 23 23	9 9 9	 22 19	M12 X 30 M12 x 30 M12 x 30	3KGH 160/170 KS 160 KGHF 160/175 KSPS 160 KT 160 KL 160 KSH 160 UVE 160 KSF 175 3KSH 200 3KGHF 200 3KTGF 200 3NH200 3NHF 200 KSF200 KS200 KT200 KL200 KSH200 UVE200 KSHF200 KSPS200 KLNC200 KG200 KP200 KS250 UVE250 KSHF 250-55 (Index) 3NHF 250-65 (Index) 3NHF 290-104 (Index) KS250MO KL250MO 2BLE-PS 160 2BLE-PS 200 2BLEF 200	160 International 160 H S Q. C. 165 HYD. Front End 200 International 200 H S Q. C. 210 Hyd. Front End 210 H S Q. C. 250 H S Q. C. 254 International 265 H S Q. C,	TH 165-37 THF 165-37 TH 210-52 THF 210-52 TP 200-52	HFKS 160 KDV 160 KDVG 160 HFK 200/160 HFKS 200 KDV 200 KDVG 200 KDV 250 KDVG 250 KKA 200 KMA 160 KMA 200 KMA 250 KFV 160 KFV 200
GN 25 GG 32 GG 25	21 21 21	27 27 27	11 11 11	 28 25	M16 x 35 M16 x 35 M16 x 35	3NH 250/315 3NHF 250/315 KT 250/315 KSH 250/315 KSHF 250/315 3KTGF 210/315 KG 250/315 KP 250/315 KLNC 250/315 KL 250 KSPS 250/300 3NHF 280 KS 315/400 KSH 400 KSHF 400 UVE 315 3NHF 400 (Index) 2BLE 200 2BLE 250MO	250 International 254 Hyd. Front End 305 Hyd Front End 305 International 305 H S Q. C. 315 International 400 H S Q. C.	TH 250-71 THF 250-71 TP 250-68 TH 315-86 THF 315-86 TP 315-90 TP 315-105 KKA 250/315 KMA 315/400	HFK 250/270 HFK 315 HFKS 250 HFKS 315 KDV 315 KDV 400 KDVG 315 KDVG 400 KZF 200 KFV 250/315
GN 40 GG 40	25.5 25.5	29 29	11 11	 35	M20 x 40 M20 x 40	3NH 400/500/630 3NHF 400/500/630 3KTGF 400/500 UVE 400/500/630/800 KT 400/500 KG 400/500 KL 400/500 KLNC 400/500 KP 400 KS 500/630 KHS 500 KSL 630 KSHF 630 KL 300 KSHF 560 2BLE 250 2BLE 315 2BLE-PS 300 2BLE-PS 315 2BLE 400 2BLE 500 2BLE-PS 400/500	400 International 400 Hyd. Front End 500 Hyd. Front End	TH 380-120 THF 380-120 TH 500-128 THF 500-160 THF 630-160	HFK 400 HFK 500 HFKS 400 HFKS 500 KDV 500 KDVG 500 KDS 630 KZF 250 KZF 315 KZF 400 KKA 400 KFV 400/500 KFV 630/500

Material:
Steel: 817M40
Blackened and Ground

TECHLEADER® TOOLING INC.

T-Nuts

To Suit Autoblok, Gamet, Mikko-Suga, Rohm & SMW-Autoblok Power Chucks

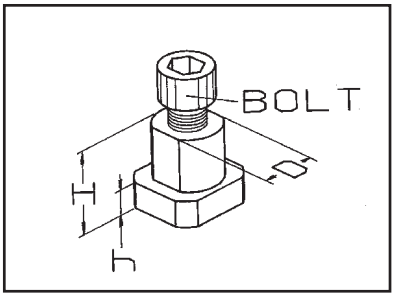

Material: Steel: 817M40 Blackened and Ground

Techleader Part No.	D	H	h	K	Bolt	Autoblok & SMW-Autoblok
GF 17	14	20	7.5	-	M10 x 25	IDN 170 HDN 170 IDL 170 HDL 170 GHDN 165 GHDN 170 GHD/FC 170 HDB 170 IMN 170 HMN 170 IML 170 HML 170
GF 18	14	18.5	6.5	16.5	M10 x 20	BHD 165 RCD 165 BBD 175 AND/ALD 165
GF 20	17	22	8	-	M12 x 30	IDN 200 HDN 200 IDL 200 HDL 200 IMN 200 HDN 200 HMN 200 HML 200 CD 200 IDN 220 HDN 220 GHD/FC 210 HDB 220 IML 200
GF 21	17	20.5	7.5	23	M12 x 20	BHD 210 BBD 210 RCD 210 AND/ALD 210
GF 25	21	25	11	-	M16 x 30	IDN 250/315/400 IMN 250/315/400 IDL 250/315/400 IML 250/315/400 HDN 250/315/400 HDM 250/315/400 HDL 250/315/400 HML 250/315/400 GHDN 400 GHDM 400 HDN/FC 400 HDB 300
GF 26	21	26.5	10	30	M16 x 30	BHD 250/315 RCD 250/305 BBD 250/315 AND 250/315 ALD 250/315 HBD 250/315

Techleader Part No.	D	H	h	K	Bolt	Gamet	Nikko-Suga	Rohm
GO 06	11	14.5	6.5	-	M8 x 20	130 N 130 MO 160 GO 160 N 160 MO 170 MF	HF-5 MO-5 HG-5 HF-6AB GO-6 HG-6AB HDM 165 MO-6	KFN 130/160 KFE 170 KFG 160 KFM 130/160
GO 08	14	15.5	6.5	-	M10 x 20	215 N 215 MO 215 GO 215 MF	HF8 MO-8 HG-8 GO-8 MAC 165 HDM-215	KFN 215 KFM 215 KFG 215 KFE 215
GO 11	20	21.5	8.25	-	M12 x 30	250 N 280 N 280 MF 280 MO 280 GO	HF-10 HF-12 HG-10 MO-10/12 GO 10/12 HDM 250/310	KFN 250 KFN 280 KFM 280 KFG 280 KFE 280
GO 14	21	25.5	11	-	M16 x 35	350 N 350 MO 350 GO 350 MF	HF-14 HF-16 MO-14 MAC 250/315 HDM 250/280	KFM 350 KFG 350 KFE 280

TECHLEADER® TOOLING INC.

TRI Square Top Jaws

For Clamping Square Section on 3 Jaw Chucks

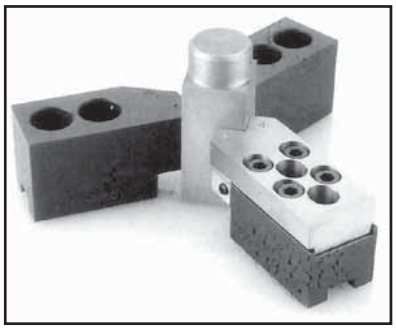

Tri square top jaws are adjustable hard top jaws used on three jaw chucks to clamp a range of square sections. This simple but clever top jaw system removes the need in many instances to use 2 or 4 jaw chucks for the clamping of square section.

Tri square top jaws are ideal for clamping a series of square parts of different size because of the quick and easy adjustment from one size to another. Tri square top jaws allow more universal use of three jaw chucks allowing the clamping of square and round section – when using chucks as fixtures horizontally on machining centers this can save costs on special fixtures.

Techleader Part No.	Chuck Diameter	Serration	Chuck Type and A/F Clamping Range			
			HOWA H027M	HOWA H037M	KITAGAWA B	KITAGAWA B200
KS 06	160	1.5mm X 60°	10-31.5 A/F	10-31.5 A/F	10-28.0 A/F	10-31.5 A/F
KS 08	200	1.5mm X 60°	11-41.0 A/F	11-41.0 A/F	11-39.5 A/F	12-39.5 A/F
KS 10	250	1.5mm X 60°	14-45.0 A/F	14-43.0 A/F	15-40.0 A/F	14-43.0 A/F
KS 12	315	1.5mm X 60°	23-68.0 A/F	25-68.0 A/F	23-70.0 A/F	

All Tri square top jaw sets are supplied fully assembled and come complete with T-nuts to suit your chuck, jaw bolts and 1 set of the required Allen keys.

Tri square top jaws for other types of chuck are available to order, plus special types to suit irregular, rectangular and polygonal shapes.

ADJUSTAGRIPS – See pages 5-17 to 5-24 & 5-36 to 5-41

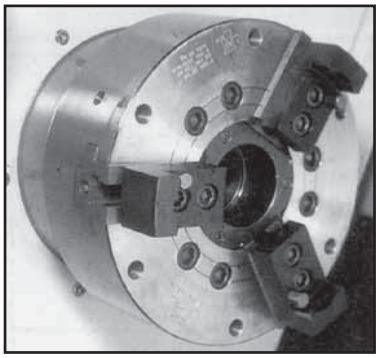

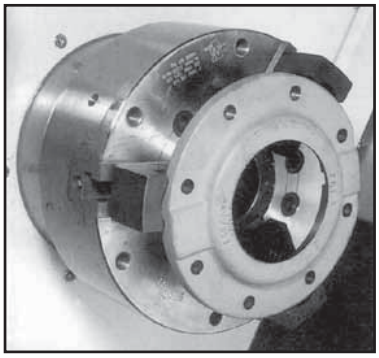

- Covering chuck diameters 160 mm to 600 mm
- Gripping range from 15 mm up to 630 mm
- One set will grip various diameters
- Clamping depth varied by a range of height pins
- Radial gripping teeth for high torque and greater safety
- Manufactured in alloy steel for strength
- Lightweight for higher R.P.M.'s with more grip
- Competitively priced
- Stock or short delivery

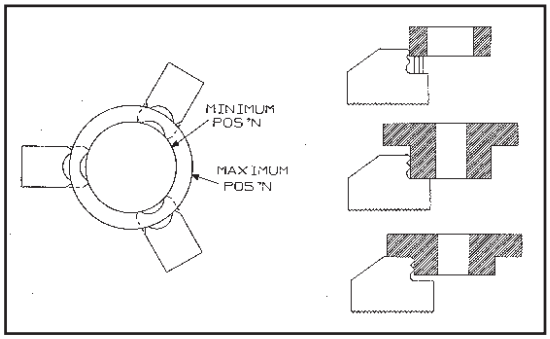

Adjustagrip jaws give superior grip to standard hard reversible jaws and at lower cost than specially designed hard jaws.

TECHLEADER® TOOLING INC.

Serration Cleaning Plate

Serration plates are available in three standard types, each supplied in a wooden case with a tube of lapping paste

- **Allows quick and easy cleaning and deburring of serrated chuck jaws.**
- **Improved accuracy of mounting to base jaws.**
- **Extends the working life and precision of the top jaws.**
- **Keeps jaw serrations in perfect condition.**
- **Different serration type on reverse of plate.**

Simply apply lapping paste and guide jaw onto serrations on plate, move jaw back and forth until serrations are in top condition.

Techleader Part No.	Serration Type		
ES96	1/16" X 90°	and reverse	1.5 mm X 60°
ES99	1/16" X 90°	" "	3/32" x 90°
ES66	1.5mm X 60°	" "	3 mm X 60°

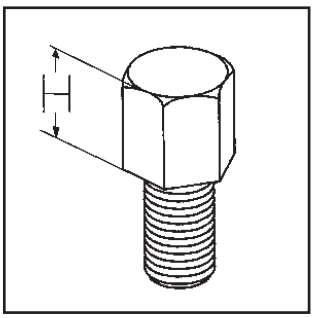

- Material: En32 Hardened & Ground.
- Ordering: Please state Techleader Part No.
- Workpiece height pins are for use with Adjustagrip hard jaws or with special jaws requiring a workpiece height location.

Workpiece Height Pins

Techleader Part No.	H	Width Across Flats	"P" Thread	Suits Adjustagrip Jaw Ranges
IT05 IT10 IT15 IT20	5 10 15 20	10	M6	LA, LB, MA, MB LY 10 - 35
IU05 IU10 IU15 IU20 IU25	5 10 15 20 25	13	M8	LC, LD, LE, LF, MC, MD, ME, MF LY 40 - 43

Quick Jaw Change Base Jaw Bolts

Techleader Part No.	Bolt Size	To Suit Base Jaw Type	Techleader Part No.	Bolt Size	To Suit Base Jaw Type
QA12	M8 x 1 x 20	MFG 160, MFG 200	QB 12	M8 x 20	GBK 140, GBK 160, GBK 200
QA32	M12 x 1.5 x 30	MFG 250	QB31	M12 x 25	GBK 250, GBK 315
QA33	M12 x 1.5 x 35	MFG 315	QB32	M12 x 30	GBK 400
QA54	M16 x 1.5 x 40	MFG 400	QB55	M16 x 45	GBK 500, GBK 630

TECHLEADER® TOOLING INC.

Trueborer

Jaw Boring-Turning Fixture for Power Chucks

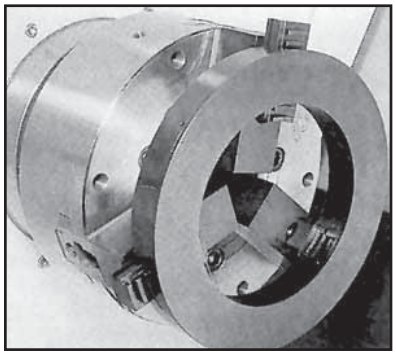

- Quick clamping of top jaws to produce perfectly concentric bores or turned diameters
- Allows jaws to be bored or turned at the same clamping pressure required to hold the workpiece
- Only one operation even if through boring jaws
- Saves on jaw usage because of fine adjustment allowing minimal skimming of jaws
- No time wasted looking for, or turning clamping rings
- One Trueborer can be used on many chucks
- For grinding, boring or turning of soft or hard top jaws

Techleader Part No.	Best Suited For Chuck Diameter	Ring Internal Diameter	Ring External Diameter	Jaw Golt Diameter Range	Bolt Diameter	Weight Kg	Max Clamping Pressure
ES 16	125-200	100	180	30-250	13 & 16	4	8000 da N
ES 25	250-315	195	295	100-340	16	10	10000 da N
ES 42	400-600	310	420	180-550	18.5	20	13000 da N

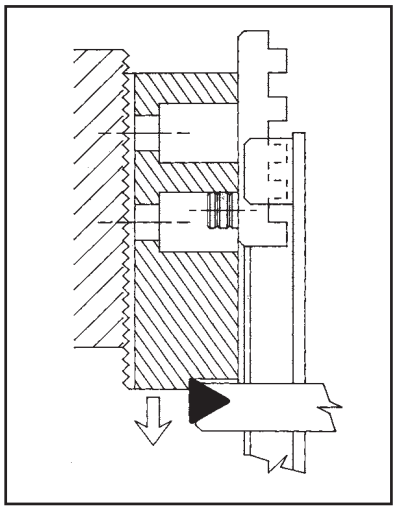

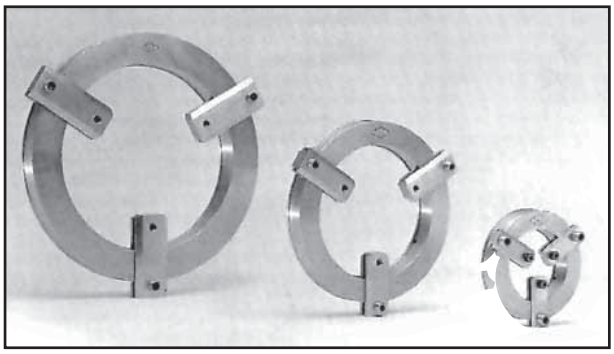

Available in three sizes to cover chuck diameters from 125mm up to 600mm

Operation

A Set top jaws on chuck master jaws to obtain required clamping diameter

B Rotate the back plate on the Trueborer to position the jaw slides so the boltheads can be inserted into the counterbore holes of the top jaws (make sure the bolts are in the correct hole on the slides).

C When in position continue to turn the backplate clockwise for boring or anti-clock wise for turning until it stops and is held tight and parallel against the top jaws.

D Clamp up chuck, Trueborer will hold jaws in required position of chuck stroke to bore or turn jaws under pressure.

The Easiest Way to Bore Soft Jaws

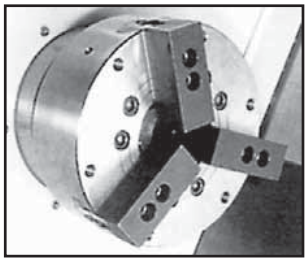

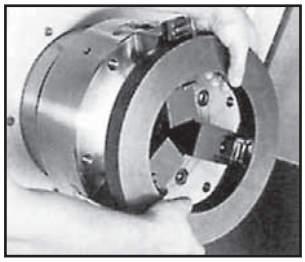

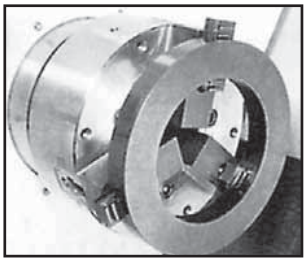

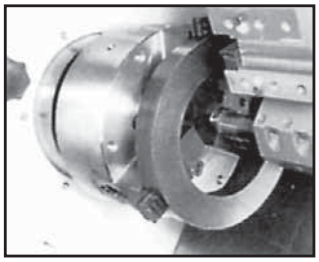

TECHLEADER® TOOLING INC.

SAMCHULLY MACHINERY CO., LTD.

HAS Super High-Speed Open-Center Chuck With Adaptor

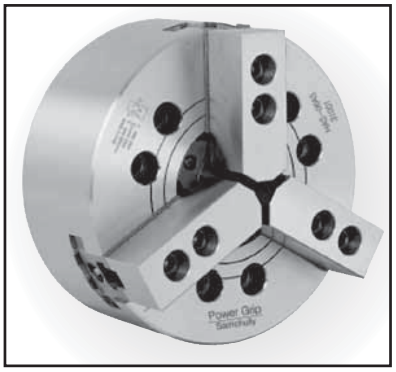

- 3-Jaw, wedge-type chuck with large bore
- Powerful gripping force and super-high turning speed
- Fits all spindle types by altering the adaptor
- Mounts on ASA, JIS, and KS standard spindles

* Use in combination with cylinder to maximize performance.

MAKE SURE YOU GREASE YOUR CHUCK WITH CHUCK-EEZ®.
SEE PAGE 5-94

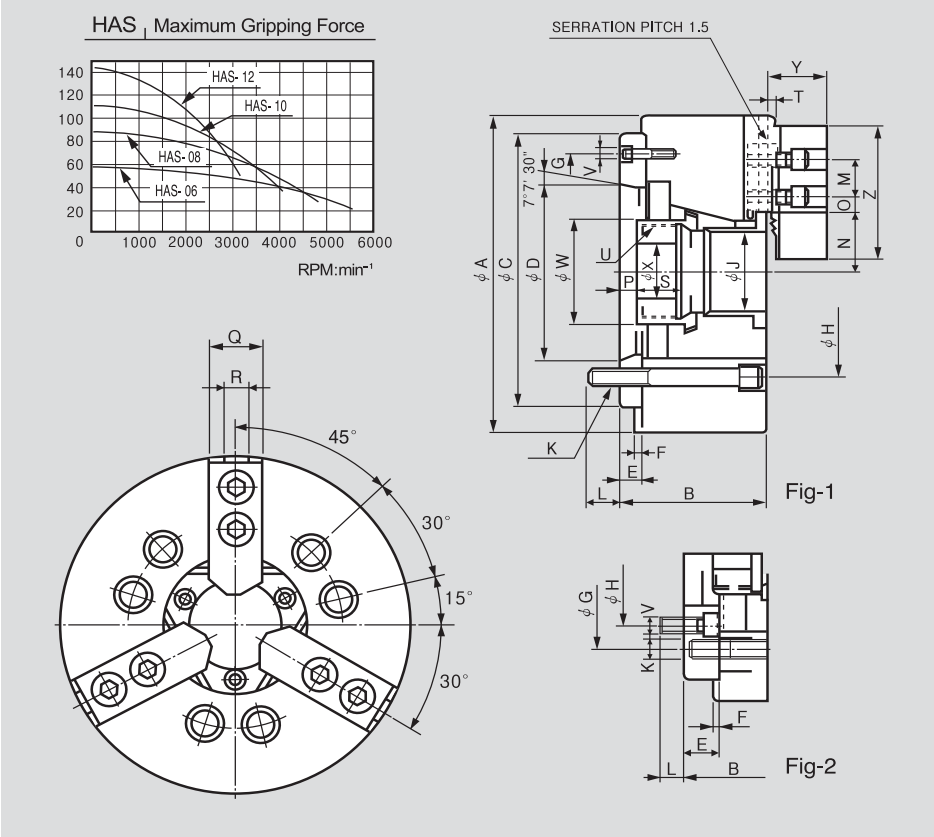

*Available in a 4-Jaw version.

Dimensions

	A	B	C(H6)	D	E	F	G	H	J	K	L	M	Nmax.	Nmin.	Omax.	Omin.	Pmax.	Pmin.	Q	R	S	T	Umax.	V	W	X	Y	Z
HAS-06A05	169	91	140	82.563	15	5	116	104.8	45	6-M10	16	20	32	29.25	22.75	9.25	26	14	26	12	19	2	M55×2	3×M6	60	20	29	66
HAS-08A06	210	103	170	106.375	17	5	150	133.4	52	6-M12	18	25	38.7	35	29.75	14.75	31.5	15.5	35	14	20.5	2	M60×2	6×M6	66	30	39	95
HAS-10A06	254	120	220	106.375	25	5	171.4	133.4	75(77)	6-M16	18.5	30	51	46.6	33.75	14.25	33.5	14.5	40	16	25	2	M85×2	6×M12	94	45	43	110
HAS-10A08	254	113	220	139.719	18	5	190	171.4	75(77)	6-M16	24	30	51	46.6	33.75	14.25	26.5	7.5	40	16	25	2	M85×2	6×M8	94	45	43	110
HAS-12A06	304	129	220	106.375	25	6	171.4	133.4	91	6-M16	18.5	30	61.3	56	45.75	15.75	33	10	50	21	28	2	M90×2	6×M12	108	50	51	111
HAS-12A08	304	122	220	139.719	18	6	190	171.4	91	6-M16	25	30	61.3	56	45.75	15.75	26	3	50	21	28	2	M100×2	6×M8	108	50	51	111

※Blank and machined draw-nuts are available.

Specifications

	Spindle Nose No.	Thru Hole Diameter. (mm)	Grip Dia. (mm) Max.	Grip Dia. (mm) Min.	Jaw STROKE Diameter. (mm)	PLUNGER STROKE (mm)	Permissible Input Force KN(kgf)	Max. Static Gripping Force KN(kgf)	Max. r.p.m min⁻¹(r.p.m)	weight kgf	GD² N·m²(kgf·m²)	Operrating Cylinder	Max. Hydraulic Pressure MPa(kgf/ cm²)	Operrating HARD JAW	Comparable Kitagawa† Model	ORDER NO.
HAS-06A05	A2-5	45	169	15	5.5	12	22 (2243)	57 (5812)	6000	13.7	2.45 (0.25)	SYH-1246	2.8 (28.6)	GT06	B-206A5	445-006
HAS-08A06	A2-6	52	210	13	7.4	16	34.8 (3549)	86 (8769)	5000	23.6	6.9 (0.71)	SYH-1552	2.65 (27)	GT08	B-208A6	445-012
HAS-10A06	A2-6	75(77)	254	31	8.8	19	43(4385)	111(11319)	4200	41.5	12.75 (1.3)	SYH-1875	2.7 (27.5)	GT10	B-210A6	445-021
HAS-10A08	A2-8	75(77)	254	34	8.8	19	43(4385)	111(11319)	4200	40.0	12.65 (1.29)	SYH-1875	2.7 (27.5)	GT10	B-210A8	445-022
HAS-12A06	A2-6	91	304	42	10.6	23	55(5608)	144 (14684)	3300	67.0	30.6 (3.12)	SYH-2091	2.7 (27.5)	GT12	B-212A6	445-026
HAS-12A08	A2-8	91	304	50	10.6	23	55(5608)	144 (14684)	3300	64.0	30.0 (3.06)	SYH-2091	2.7 (27.5)	GT13	B-212A8	445-027

※Maximum turning speed is based on actual measurements.
※HAS-10A06 and HAS10A08 are available with 75㎜ and 77㎜ thru holes.
※Refer to figure 2 for HAS-10A06, HAS12A06.
※Specifications are subject to change without notice.

† Kitagawa is a registered trade mark of Kitagawa Iron Works Co. Ltd.

TECHLEADER® TOOLING INC.

SAMCHULLY MACHINERY CO., LTD.

HAS Super High-Speed Open-Center Chuck With Adaptor for HAAS CNC Lathes

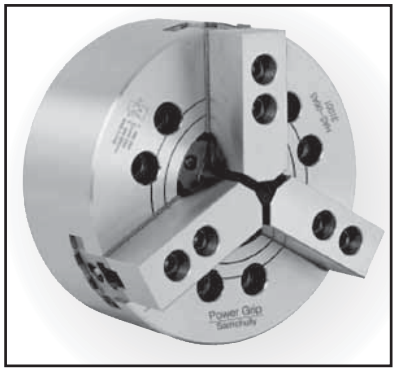

- 3-Jaw, wedge-type chuck with large bore
- Powerful gripping force and super-high turning speed
- Fits all spindle types by altering the adaptor
- Mounts on ASA, JIS, and KS standard spindles

* Use in combination with cylinder to maximize performance.

MAKE SURE YOU GREASE YOUR CHUCK WITH CHUCK-EEZ®.
SEE PAGE 5-94

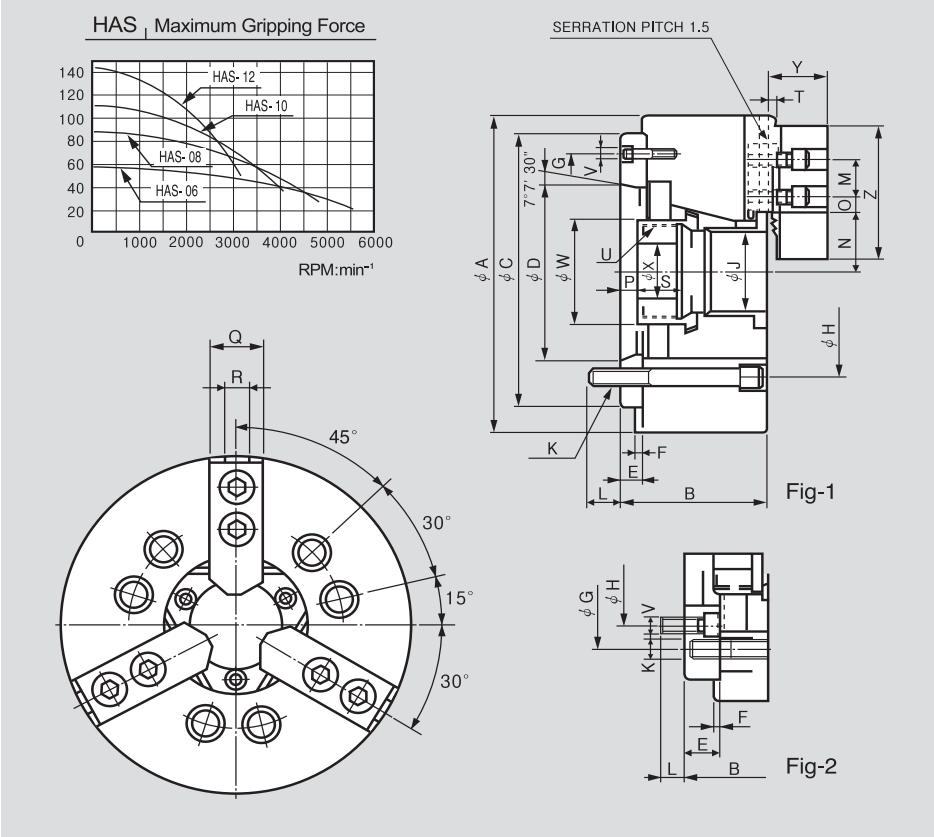

*Available in a 4-Jaw version.

Dimentions

MODEL	A	B	C (H6)	D	E	F	G	H	J	K	L	M	N max.	N min.	O max.	O min.	P max.	P min.	Q	R	S	T	U max.	V	W	X	Y	Z
HAS-05A05HA	135	72	110	82.563	16	4	104.78	104.78	33	3-7/16-14UNC	13.3	14	26.5	23.8	19.8	7.75	17	7	23	10	20	2	M40X1.5	3XM6	47	–	26	54
HAS-06A05HA	169	91	140	82.563	15	5	116	104.8	45	6-3/8-16UNC	16	20	32	29.25	22.75	9.25	26	14	26	12	19	2	M55X2	3XM6	60	20	29	66
HAS-08A05HA	210	103	170	106.375	17	5	150	133.4	52	6-1/2-13UNC	18	25	36.7	35	29.75	14.5	31.5	15.5	35	14	20.5	2	M60X2	6XM6	66	30	39	95
HAS-10A06HA	254	120	220	106.375	25	5	171.4	133.4	75(77)	6-5/8-11UNC	18.5	30	51	46.6	33.75	14.25	33.5	14.5	40	16	25	2	M85X2	6XM12	94	45	43	110
HAS-10A08HA	254	113	220	139.719	18	5	190	171.4	75(77)	6-5/8-11UNC	24	30	51	46.6	33.75	14.25	26.5	7.5	40	16	25	2	M85X2	6XM8	94	45	43	110
HAS-12A06HA	304	129	220	106.375	25	6	171.4	133.4	91	6-5/8-11UNC	18.5	30	61.3	56	45.75	15..75	33	10	50	21	28	2	M90X2	6XM12	108	50	51	111

** Blank and machined draw-nuts are available.*

Specifications

MODEL	Spindle Nose No.	Thru Hole Diameter	Grip Diameter (mm) Max.	Grip Diameter (mm) Min.	Jaw Stroke Diameter (mm)	Plunger Stroke (mm)	Permissible Input Force KN(kgf)	Max. Static Gripping Force KN(kgf)	Max rpm min⁻¹ (rpm)	Weight kgf	GD2 N•m² (kgf•m²)	Operating Cylinder	Max. Hydralic Pressure MPa (kgf/cm²)	Operating Hard Jaw	ORDER NO.
HAS-05A05HA	A2-5	33	135	12	5.4	10	17.5(1784)	36(3671)	7000	6.7	0.69(0.07)	SYH-1036HA	3.43(35.0)	HB04N1	445-004
HAS-06A05HA	A2-5	45	169	15	5.5	12	22(2243)	57(5812)	6000	13.7	2.45(0.25)	SYH-1246HA	2.8(28.6)	GT06	445-007
HAS-08A05HA	A2-5	52	210	13	7.4	16	24.8(3549)	86(8769)	5000	23.6	6.9(0.71)	SYH-1552HA	2.65(27)	GT08	445-013
HAS-10A06HA	A2-6	75(77)	245	31	8.8	19	43(4385)	111(11319)	4200	41.5	12.75(1.3)	SYH-1877HA	2.7(27.5)	GT10	445-023
HAS-10A06HA	A2-6	75(77)	245	34	8.8	19	43(4385)	111(11319)	4200	40.0	12.65(1.29)	SYH-1877HA	2.7(27.5)	GT10	445-024
HAS-12A06HA	A2-6	91	304	42	10.6	23	55(5608)	144 (14684)	3300	67.0	30.6 (3.12)	SYH-2511HA	2.7(27.5)	GT12	445-028

※Maximum turning speed is based on actual measurements.
※HAS-10A06 and HAS10A08 are available with 75㎜ and 77㎜ thru holes.
※Refer to figure 2 for HAS-10A06, HAS12A06.
※Specifications are subject to change without notice.

† Kitagawa is a registered trade mark of Kitagawa Iron Works Co. Ltd.

TECHLEADER® TOOLING INC.

SAMCHULLY MACHINERY CO., LTD.

HAH - Open-Center Chuck With Adaptor

- 3-Jaw, wedge-type chuck with bore.
- Fits all spindle types by altering the adaptor.
- Mounts on ASA, JIS, and KS standard spindles.

* Use in combination with cylinder to maximize performance.

MAKE SURE YOU GREASE YOUR CHUCK WITH CHUCK-EEZ®.
SEE PAGE 5-94

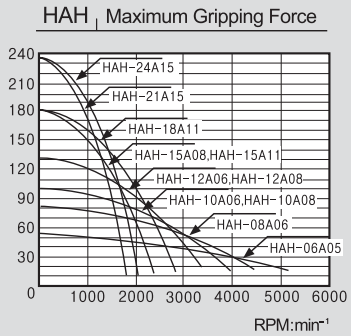

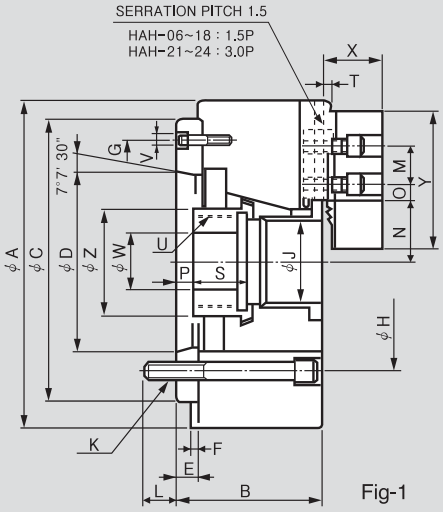

Fig-1

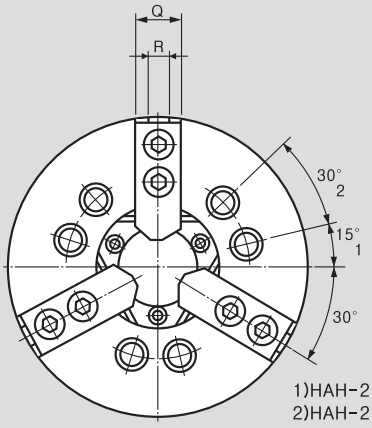

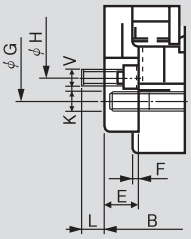

Fig-2

Dimensions

	A	B	C(H6)	D	E	F	G	H	J	K	L	M	Nmax.	Nmin.	Omax.	Omin.	Pmax.	Pmin.	Q	R	S	T	Umax.	V	W	X	Y	Z
HAH-15A08	381	160	300	139.719	33	6	235.0	171.4	117.5	6-M20	24	43	82	76.7	43.75	18.25	44	21	62	22	39	5	M130×2.0	6-M16	60	70	165	139
HAH-15A11	381	149	300	196.869	22	6	260	235.0	117.5	6-M20	28	43	82	76.7	43.75	18.25	33	10	62	22	39	5	M130×2.0	3-M10	60	70	165	139
HAH-18A11	450	149	380	196.869	22	6	320	235.0	117.5	6-M20	28	43	82	76.7	78.25	18.25	33	10	62	22	39	5	M130×2.0	3-M10	60	70	165	139
HAH-21A15	530	161	380	285.775	27	6	330.2	330.2	140	6-M22(24)	34	60	98.5	93.2	87.5	21.5	38	15	65	25	39	5	M155×3.0	3-M12	80	73	180	170
HAH-24A11	610	170	380	285.775	27	6	330.2	330.2	165	6-M22(24)	35	60	108	102.7	117.5	21.5	47	24	65	25	40	5	M175×3.0	3-M12	80	73	180	187
HAH-24A15	610	170	380	285.775	27	6	330.2	330.2	165	6-M22(24)	35	60	108	102.7	117.5	21.5	47	24	65	25	40	5	M175×3.0	3-M12	80	73	180	187

※ Refer to figure 2 for HAH-12A06, and HAH-15A8. ※ HAH-21A15 and HAH-24A15 are available with M22 or M24 mounting bolts.

Specifications

	Spindle Nose No.	Thru Hole Diameter. (mm)	Grip Dia. (mm) Max.	Grip Dia. (mm) Min.	Jaw STROKE Diameter. (mm)	PLUNGER STROKE (mm)	Permissible Input Force KN(kgf)	Max. Static Gripping Force KN(kgf)	Max. r.p.m min⁻¹(r.p.m)	weight kgf	GD² N·m²(kgf·m²)	Operating Cylinder	Max. Hydraulic Pressure MPa(kgf/ cm²)	Operrating HARD JAW	Comparable Kitagawa† Model	ORDER NO.
HAH-15A08	A2-8	117.5	381	30	10.6	23	71 (7240)	180(18355)	2500	134	96.89(9.88)	HYH-2511	2.3(23.5)	GT15	B-15A08	445-106
HAH-15A11	A2-11	117.5	381	30	10.6	23	71 (7240)	180(18355)	2500	127	93.55(9.54)	HYH-2511	2.3(23.5)	GT15	B-15A11	445-107
HAH-18A11	A2-11	117.5	450	30	10.6	23	71 (7240)	180(18355)	2000	178	187.30(19.1)	HYH-2511	2.3(23.5)	GT15	B-18A11	445-112
HAH-21A15	A2-15	140	530	87	10.6	23	90 (9177)	234(23861)	1700	246	362.83(37.0)	HYH-2511	3.0(30.6)	HB18B2	B-21A15	445-117
HAH-24A11	A2-15	165	610	110	10.6	23	90 (9177)	234(23861)	1400	304	660.94(67.4)	HYH-2511	3.0(30.6)	HB18B2	B-24A15	445-126
HAH-24A15	A2-15	165	610	110	10.6	23	90 (9177)	234(23861)	1400	304	660.94(67.4)	HYH-2511	3.0(30.6)	HB18B2	B-24A15	445-127

※ Blank and machined draw-nuts are available. ※ Specifications are subject to change without notice.

TECHLEADER® TOOLING INC.

SAMCHULLY MACHINERY CO., LTD.

HAH - Open-Center Chuck
With Adaptor for HAAS CNC Lathes

- 3-Jaw, wedge-type chuck with bore.
- Fits all spindle types by altering the adaptor.
- Mounts on ASA, JIS, and KS standard spindles.

* Use in combination with cylinder to maximize performance.

MAKE SURE YOU GREASE YOUR CHUCK WITH CHUCK-EEZ®.
SEE PAGE 5-94

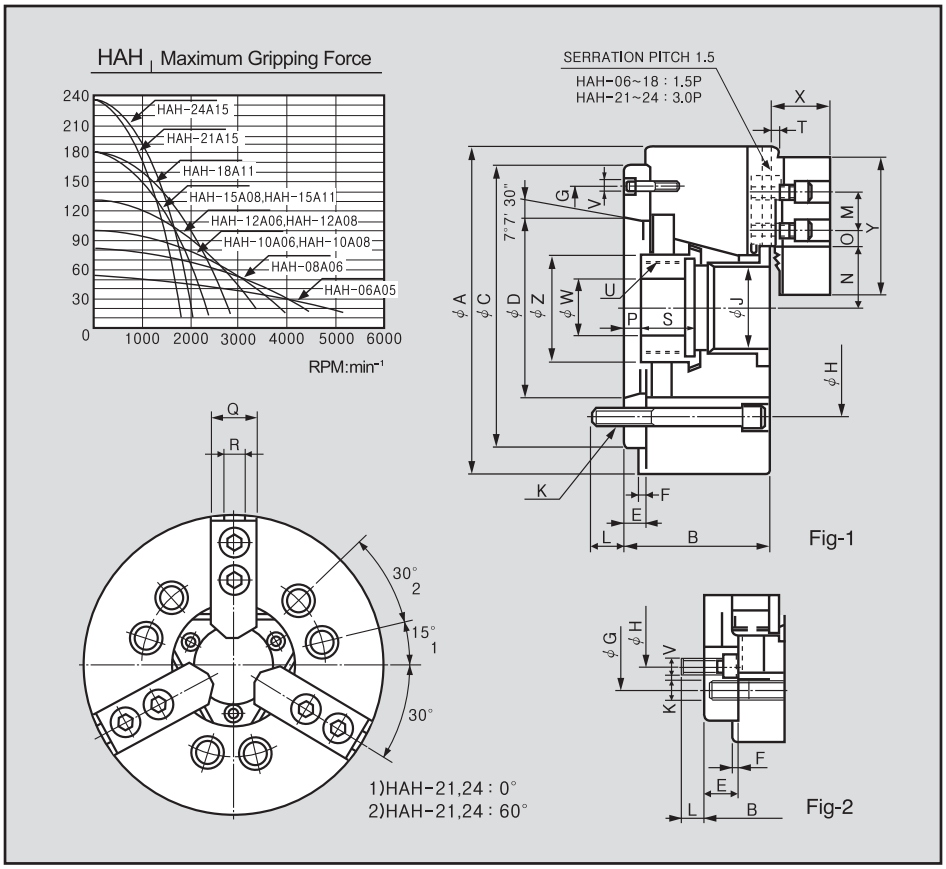

Dimensions

	A	B	C(H6)	D	E	F	G	H	J	K	L	M	Nmax.	Nmin.	Omax.	Omin.	Pmax.	Pmin.	Q	R	S	T	Umax.	V	W	X	Y	Z
HAH-15A08HA	381	160	300	139.719	33	6	235.0	171.4	117.5	6-3/4-10UNC	24	43	82	76.7	43.75	18.25	44	21	62	22	39	5	M130×2.0	6-M16	60	70	165	139
HAH-18A11HA	450	149	380	196.869	22	6	320	235.0	117.5	6-3/4-10UNC	28	43	82	76.7	78.25	18.25	33	10	62	22	39	5	M130×2.0	3-M10	60	70	165	139

※Refer to figure 2 for HAH-12A06, and HAH-15A8. ※HAH-21A15 and HAH-24A15 are available with M22 or M24 mounting bolts.

Specifications

	Spindle Nose No.	Thru Hole Diameter. (mm)	Grip Dia. (mm) Max.	Grip Dia. (mm) Min.	Jaw STROKE Diameter. (mm)	PLUNGER STROKE (mm)	Permissible Input Force KN(kgf)	Max. Static Gripping Force KN(kgf)	Max. r.p.m min⁻¹(r.p.m)	weight kgf	GD² N·m²(kgf·m²)	Operating Cylinder	Max. Hydraulic Pressure MPa(kgf/ cm²)	Operating HARD JAW	ORDER NO.
HAH-15A08HA	A2-8	117.5	381	30	10.6	23	71 (7240)	180(18355)	2500	134	96.89(9.88)	HYH-25011HA	2.3(23.5)	GT15	445-108
HAH-18A11HA	A2-11	117.5	450	30	10.6	23	71 (7240)	180(18355)	2000	178	187.30(19.1)	HYH-2816HA	2.3(23.5)	GT15	445-114

※Blank and machined draw-nuts are available. ※Specifications are subject to change without notice. † Kitagawa is a registered trade mark of Kitagawa Iron Works Co. Ltd.

TECHLEADER® TOOLING INC.

SAMCHULLY MACHINERY CO., LTD.

HST - 2 Jaw High-speed Open-Center Chuck

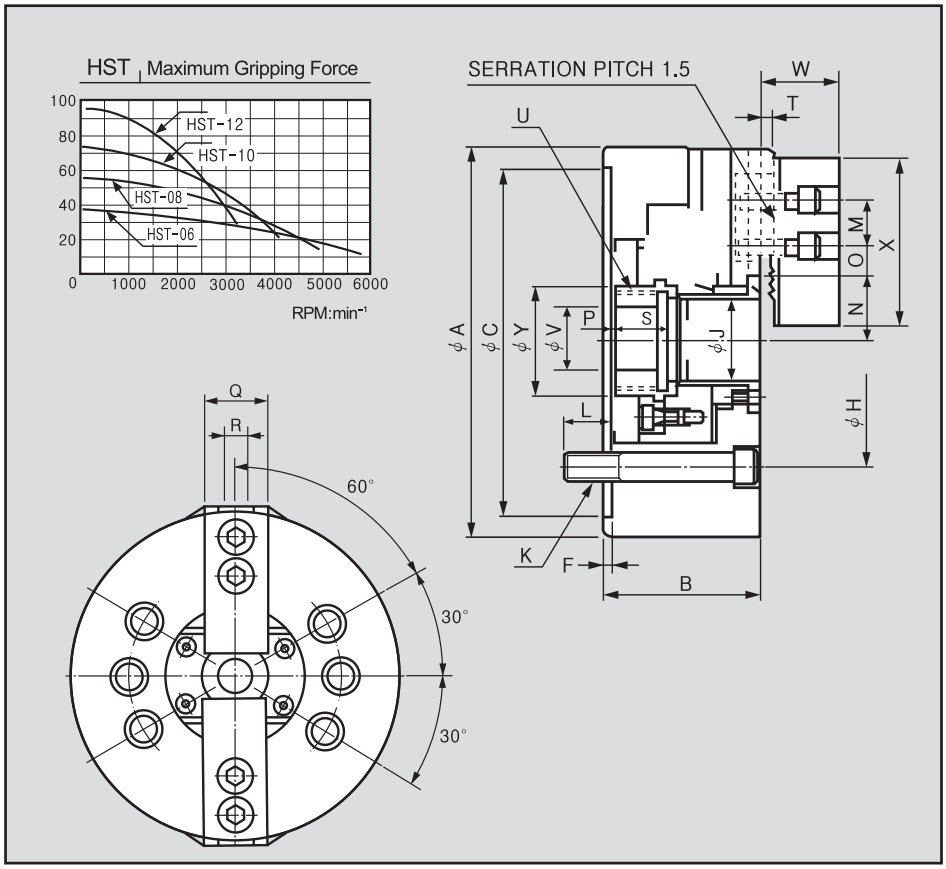

- 2-jaw, wedge-type chuck with large bore.
- Powerful gripping force and super-high turning speed.
- 2-jaw design facilitates work on angled structures and flanges.
- Includes one set of soft jaws.

※Use in combination with Samchully cylinder to maximize performance.

MAKE SURE YOU GREASE YOUR CHUCK WITH CHUCK-EEZ®.

SEE PAGE 5-94

Dimensions

	A	B	C(H6)	F	H	J	K	L	M	Nmax.	Nmin.	Omax.	Omin.	Pmax.	Pmin.	Q	R	S	T	Umax.	V	W	X	Y
HST-06	169	81	140	5	104.8	45	6-M10×95	16	20	32	29.25	22.75	9.25	11	-1	26	12	19	2	M55×2.0	20	29	66	60
HST-08	210	91	170	5	133.4	52	6-M12×105	20	25	38.7	35	30	15	14.5	-1.5	35	14	20.5	2	M60×2.0	30	39	95	66
HST-10	254	100	220	5	171.4	75	6-M16×120	22	30	51	46.6	34	14.5	8.5	-10.5	40	16	25	2	M85×2.0	45	43	110	94
HST-12	304	110	220	6	171.4	91	6-M16×130	23	30	61.3	56	45.75	15.75	8	-15	50	21	28	2	M100×2.0	50	51	111	108

※Blank and machined draw-nuts are available.

Specifications

	Thru Hole Diameter. (mm)	Grip Dia. (mm) Max.	Grip Dia. (mm) Min.	Jaw STROKE Diameter. (mm)	PLUNGER STROKE (mm)	Permissible Input Force KN(kgf)	Max. Static Gripping Force KN(kgf)	Max. r.p.m min⁻¹(r.p.m)	weight kgf	GD² N·m²(kgf·m²)	Operrating Cylinder	Max. Hydraulic Pressure MPa(kgf/ cm²)	Comparable Kitagawa† Model	ORDER NO.
HST-06	45	169	15	5.5	12	14.5 (1473)	38 (3875)	6000	11.5	2.21 (0.225)	SYH-1246	1.85 (18.9)	BT-206	445-040
HST-06A05	45	169	15	5.5	12	14.5 (1473)	38 (3875)	6000	11.5	2.21 (0.225)	SYH-1246	1.85 (18.9)	BT-206A05	445-041
HST-08	52	210	14	7.4	16	23.2 (2366)	57.3 (5843)	5000	21.5	6.47 (0.66)	SYH-1552	1.80 (18.4)	BT-208	445-045
HST-08A06	52	210	14	7.4	16	23.2 (2366)	57.3 (5843)	5000	21.5	6.47 (0.66)	SYH-1552	1.80 (18.4)	BT-208A06	445-047
HST-10	75	254	31	8.8	19	28.5 (2906)	74 (7546)	4200	33.5	12.06 (1.23)	SYH-1875	1.80 (18.4)	BT-210	445-050
HST-10A06	75	254	31	8.8	19	28.5 (2906)	74 (7546)	4200	33.5	12.06 (1.23)	SYH-1875	1.80 (18.4)	BT-210A06	445-051
HST-10A08	75	254	31	8.8	19	28.5 (2906)	74 (7546)	4200	33.5	12.06 (1.23)	SYH-1875	1.80 (18.4)	BT-210A08	445-052
HST-12	91	304	34	10.6	23	36.7 (3742)	96 (9789)	3300	52	27.46 (2.8)	SYH-2091	1.81 (18.5)	BT-212	445-055
HST-12A06	91	304	34	10.6	23	36.7 (3742)	96 (9789)	3300	52	27.46 (2.8)	SYH-2091	1.81 (18.5)	BT-212A06	445-056
HST-12A08	91	304	34	10.6	23	36.7 (3742)	96 (9789)	3300	52	27.46 (2.8)	SYH-2091	1.81 (18.5)	BT-212A08	445-057

※Maximum turning speed is based on actual measurements. ※Specifications are subject to change without notice. † Kitagawa is a registered trade mark of Kitagawa Iron Works Co. Ltd.

TECHLEADER® TOOLING INC.

SAMCHULLY MACHINERY CO., LTD.

HH - Big Bore 3-Jaw High-speed Open-Center Chuck

- 3-jaw, wedge-type chuck with extra large bore.
- Big bore facilitates work on large work pieces.
- Powerful gripping force and super-high turning speed.
- Includes one set of soft jaws.

※ Use in combination with Samchully cylinder to maximize performance.

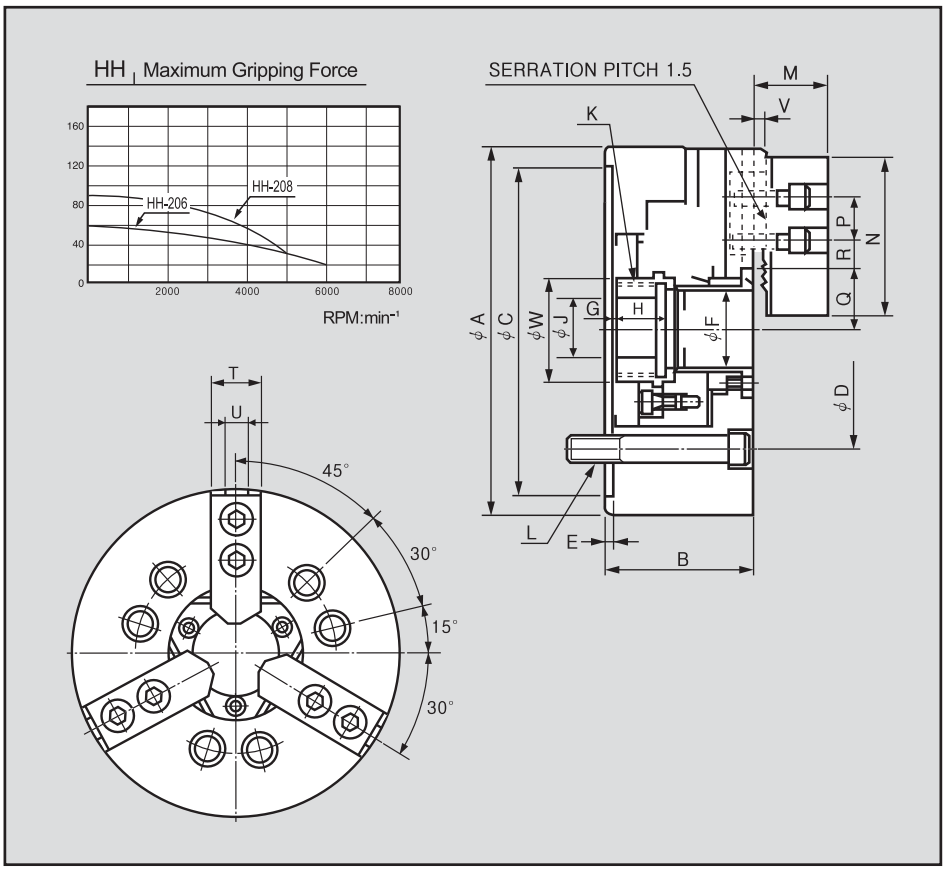

MAKE SURE YOU GREASE YOUR CHUCK WITH CHUCK-EEZ®.
SEE PAGE 5-94

Dimensions

	A	B	C(H6)	D	E	F	Gmax.	Gmin.	H	J	Kmax.	L	M	N	P	Qmax.	Qmin.	Rmax.	Rmin.	T	U	V	W
HH-206	175	81	140	104.8	5	56	14	-1	17.5	20	M60×2.0	6-M10×95	32.5	72	20	38	34.8	21.75	10.25	31	12	2	65
HH-208	210	91	170	133.4	5	66	7	-9	27.5	35	M75×2.0	6-M12×120	39	95	25	45.7	42	23.75	11.75	35	14	2	80
MH-210	254	100	220	171.4	5	82	8.5	-11	25	52	M90 X 2.0	6-M16X20	43	110	30	54.5	50.1	32.25	14.25	40	16	2	101
HH-212	315	110	300	235.0	6	103	8	-15	28	-	M112×2.0	6-M20×130	50.5	111	30	67.3	62	45.75	15.75	50	2	2	124

※ Blank and machined draw-nuts are available.

Specifications

	Thru Hole Diameter. (mm)	Grip Dia. (mm) Max.	Grip Dia. (mm) Min.	Jaw STROKE Diameter. (mm)	PLUNGER STROKE (mm)	Permissible Input Force KN(kgf)	Max. Static Gripping Force KN(kgf)	Max. r.p.m min⁻¹(r.p.m)	weight kgf	GD² N·m²(kgf·m²)	Operrating Cylinder	Max. Hydraulic Pressure MPa(kgf/ cm²)	Operrating HARD JAW	Comparable Kitagawa† Model	ORDER NO.
HH-206	52	175	16.5	5.4	15	24.7 (2551)	57.3 (5812)	6000	11.9	2.25 (0.23)	SYH-1552	1.78 (18.1)	GT06	BB206	445-285
HH-206A05	52	175	16.5	5.4	15	24.7 (2551)	57.3 (5812)	6000	11.9	2.25 (0.23)	SYH-1552	1.78 (18.1)	GT06	BB206A05	445-286
HH-208	65	210	23	7.4	17.5	36.4 (3596)	87 (8872)	5000	23	5.6 (0.57)	SH-17068	2.34 (23.9)	GT08	BB208	445-290
HH-208A06	65	210	23	7.4	17.5	36.4 (3596)	87 (8872)	5000	23	5.6 (0.57)	SH-17068	2.34 (23.9)	GT08	BB208A06	445-292
MH-210	82	254	30	8.8	19	49 (4976)	126.6 (12848)	4500	32	1.26 (0.13)	SH-19082	2.74 (28)	GT10	BB210	445-295
HH-212	103	315	54	10.6	23	55 (5608)	144 (14686)	2800	55.3	28.93 (2.95)	HYH-2511	1.85 (19.0)	GT13	BB212	445-300
HH-212A08	103	315	54	10.6	23	55 (5608)	144 (14686)	2800	55.3	28.93 (2.95)	HYH-2511	1.85 (19.0)	GT13	BB212A08	445-302

※ Maximum turning speed is based on actual measurements. ※ Specifications are subject to change without notice. † Kitagawa is a registered trade mark of Kitagawa Iron Works Co. Ltd.

TECHLEADER® TOOLING INC.

SAMCHULLY MACHINERY CO., LTD.

4 Jaw High-Speed Wedge-Type Open-Center Power Chuck

MODEL: HSF/HHF

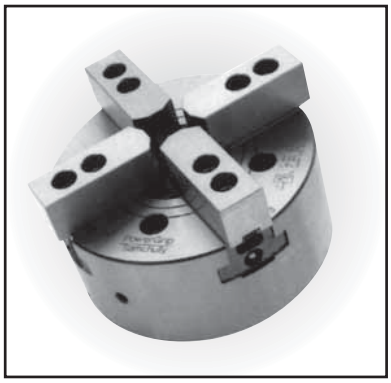

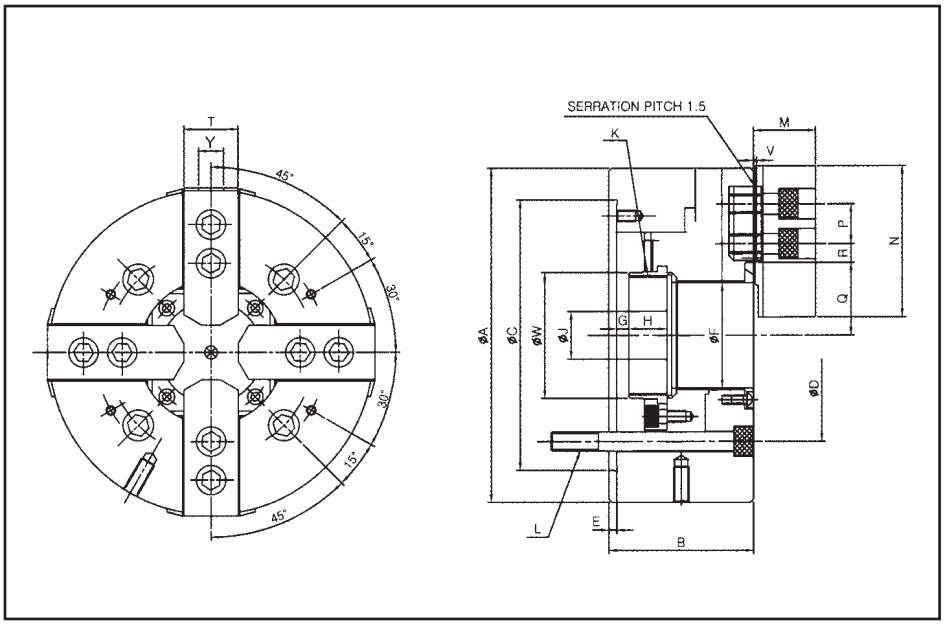

MAKE SURE YOU GREASE YOUR CHUCK WITH CHUCK-EEZ®.
SEE PAGE 5-94

Dimentions

ORDER NO.	MODEL	A	B	C (H6)	D	E	F	G max.	G min	H	J	K max.	L	M	N	P	Q max.	Q min.	R max.	R min.	T	Y	V	W
445-271	HHF-208	210	91	170	133.4	5	66	7.5	-10	27	30	M75X2.0	4-M12x115	39	95	25	45.7	42	23.75	11.75	35	14	2	80
445-274	HSF-08	210	91	170	133.4	5	52	14.5	-1.5	20.5	30	M60X2.0	4-M12x105	39	95	25	38.7	35	29.75	14.75	35	14	2	66
445-277	HSF-10	254	100	220	171.4	5	77	8.5	-11	25	45	M85X2.0	4-M16x120	43	110	30	51	46.6	33.75	14.75	40	16	2	94
445-280	HSF-12	304	110	220	171.4	6	91	8	-15	28	50	M100X2.0	4-M16x130	51	111	30	61.3	56	45.75	15.75	50	21	2	180

Specifications

ORDER NO.	MODEL	Tru Hole Diameter	Grip Diameter (mm)		Jaw Stroke Diameter (mm)	Plunger Stroke (mm)	Permissible Input Force KN(kgf)	Max. Static Gripping Force KN(kgf)	Max rpm min-¹(rpm)	Weight kgf	GD2 N•m² (kgf•m²)	Operating Cylinder	Max. Hydralic Pressure (MPa/kgf/cm²)
			Max.	Min.									
445-271	HHF-208	66	210	23	7.4	17.5	23.5 (2397)	57.9 (5914)	5000	23.5	5.59 (0.57)	SH-17068 (SYH-1768)	1.6 (16.4)
445-274	HSF-08	52	210	13	7.4	16	23.2 (2366)	57.3 (5843)	5000	22.5	6.67 (0.68)	SH-15052 (SYH-1552)	1.8 (18.4)
445-277	HSF-10	77	254	31	8.8	19	28.5 (7546)	74 (7546)	4200	34.5	1.23 (0.13)	SH-18077 (SYH-1877)	1.8 (18.4)
445-280	HSF-12	91	304	34	10.6	23	36.7 (3742)	96 (9789)	3300	52	27.47 (2.8)	SH-21091 (SYH-2091)	2.8 (28.5)

** Maximum Turning Speed is based on actual measurements.*
** Specifications are subject to change without notice.*

TECHLEADER® TOOLING INC.

SAMCHULLY MACHINERY CO., LTD.

4 Jaw Open-Center Chuck

MODEL: HH

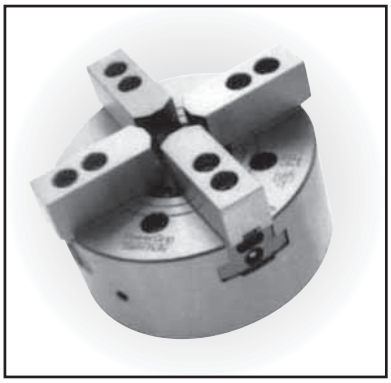

MAKE SURE YOU GREASE YOUR CHUCK WITH CHUCK-EEZ®.
SEE PAGE 5-94

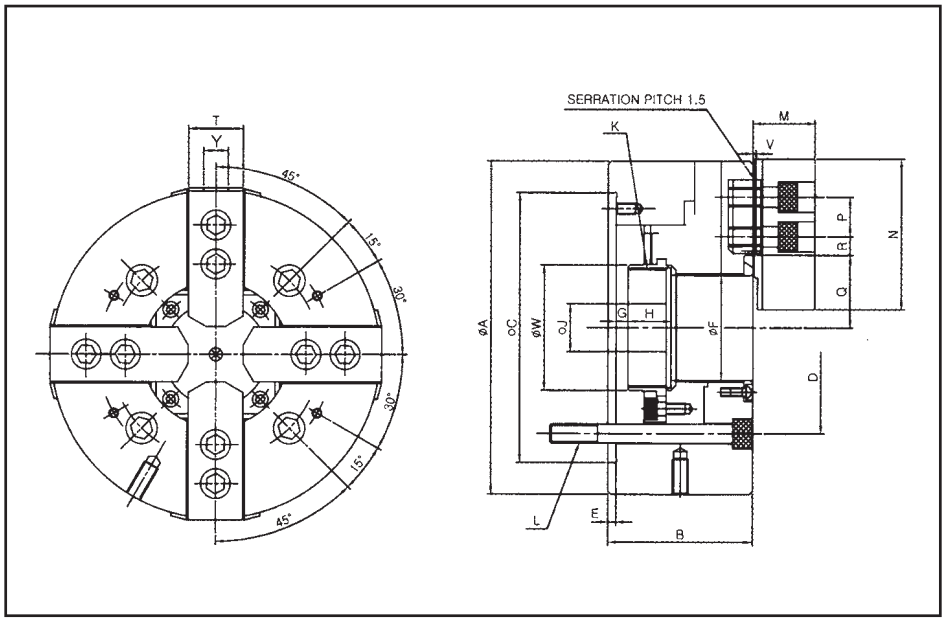

Dimentions

ORDER NO.	MODEL	A	B	C (H6)	D	E	F	G max.	G min	H	J	K max.	L	M	N	P	Q max.	Q min.	R max.	R min.	T	Y	V	W
445-384	HCHF-15	318	133	300	235	6	118	11	-12	39	60	M130X2.0	4M20X150	70	165	43	82	76.7	43.75	18.25	62	22	5	139
445-387	HCHF-18	450	133	380	235	6	118	11	-12	39	60	M130X2.0	4M20X130	70	165	43	82	76.7	78..25	18.25	62	22	5	136
445-390	HCHF-21	530	140	380	330.2	6	140	11	-12	39	80	M155X3.0	4M22(24)X140	73	180	60	98.5	93.5	87.5	21.5	65	25	5	170
445-394	HCHF-24	610	149	380	330.2	6	165	20	-3	40	80	M175X3.0	4M22(24)X150	73	180	60	102.7	108	117.5	21.5	65	25	5	187

** HCHF-21 and HCHF-24 are available with M22 or M24 mounting bolts.*

Specifications

ORDER NO.	MODEL	Tru Hole Diameter	Grip Diameter (mm)		Jaw Stroke Diameter (mm)	Plunger Stroke (mm)	Permissible Input Force KN(kgf)	Max. Static Gripping Force KN(kgf)	Max rpm min-1(rpm)	Weight kgf	GD2 N•m² (kgf•m²)	Operating Cylinder	Max. Hydralic Pressure (MPa/kgf/cm²)
			Max.	Min.									
445-384	HCHF-15	117.5	381	30	10.6	23	47 (4793)	120 (12236)	2500	115	87.3 (8.90)	SH-25011	1.5 (15.3)
445-387	HCHF-18	117.5	450	30	10.6	23	47 (4793)	120 (12236)	2000	159	165.8 (16.9)	SH-25011	1.5 (15.3)
445-390	HCHF-21	140	530	87	10.6	23	60 (6117)	156 (15907)	1700	235	351.2 (35.8)	SH-25011	1.97 (20.1)
445-394	HCHF-24	165	610	110	10.6	23	60 (6117)	156 (15907)	1400	293	651.4 (66.4)	SH-25011	1.97 (20.1)

** Maximum Turning Speed is based on actual measurements.*
** Specifications are subject to change without notice.*

TECHLEADER® TOOLING INC.

SAMCHULLY MACHINERY CO., LTD.

HCA - Closed Center Chuck With Adaptor

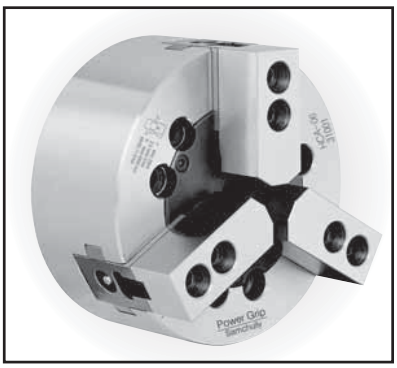

- 3-jaw, wedge-type chuck with closed center.
- Fits all spindle types by altering the adaptor.
- Mounts on ASA, JIS, and KS standard spindles.
- Includes one set of soft jaws.

※ Use in combination with Samchully cylinder to maximize performance.

MAKE SURE YOU GREASE YOUR CHUCK WITH CHUCK-EEZ®.
SEE PAGE 5-94

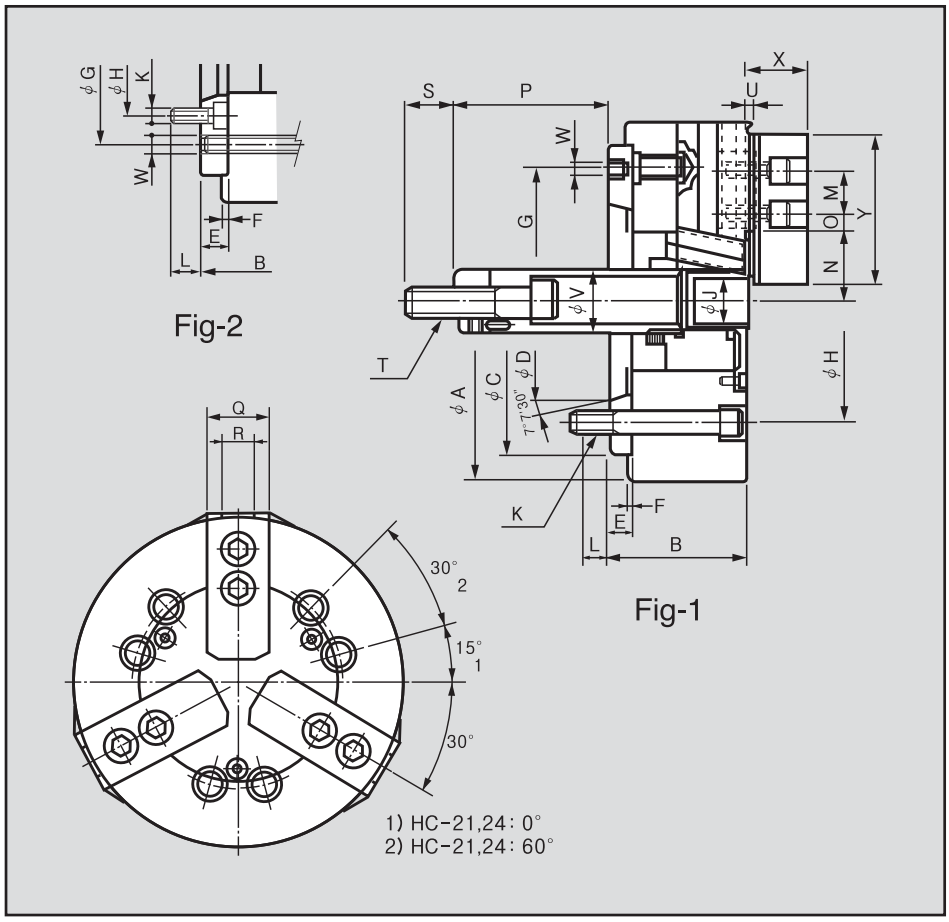

*Available in a 4-Jaw version.

Dimensions

	A	B	C(H6)	D	E	F	G	H	J	K	L	M	Nmax.	Nmin.	Omax.	Omin.	Pmax.	Pmin.	Q	R	S	T	U	V	W	X	Y
HC-06A05	165	84	140	82.563	15	5	116	104.8	21	6-M10	14	20	37.8	33.5	13.75	7.75	84.5 (86.5)	64.5 (66.5)	31	12	36	M16×2.0	4	34	3-M6	35	72
HC-08A06	210	97	170	106.375	17	5	150	133.4	25	6-M12	18	25	46.3	41.9	22.25	11.75	94 (110)	73 (89)	35	14	36	M20×2.5	5	38	3-M6	42	95
HC-10A06	254	104	220	106.375	20	5	171.4	133.4	34	6-M12	18	30	51.1	46.7	30.75	11.25	99 (114)	74 (89)	40	16	36	M20×2.5	5	45	6-M16	46	110
HC-10A08	254	102	220	139.719	18	5	190	171.4	34	6-M16	25	30	51.1	46.7	30.75	11.25	101 (140)	76 (115)	40	16	36	M20×2.5	5	45	3-M8	46	110
HC-12A06	304	120	220	106.375	20	6	171.4	133.4	34	6-M12	18	30	61	55.75	48.75	12.75	118 (119)	88 (89)	50	18	36	M24×3.0 (M20×2.5)	5	50	6-M16	54	129
HC-12A08	304	118	220	139.719	18	6	190	171.4	34	6-M16	25	30	61	55.75	48.75	12.75	120 (145)	90 (115)	50	18	36	M24×3.0 (M20×2.5)	5	50	3-M8	54	129
HC-15A08	381	130	300	139.719	22	6	235.0	171.4	-	6-M16	23	43	77.5	69.5	48.75	23.25	82	47	50	25.5	55	M30×3.5	2	60	6-M20	61	135
HC-15A11	381	130	300	196.869	22	6	260	235.0	-	6-M20	33	43	77.5	69.5	48.75	23.25	82	47	50	25.5	55	M30×3.5	2	60	3-M10	61	135
HC-18A08	450	130	300	139.719	22	6	235.0	171.4	-	6-M16	23	43	108	100	48.75	23.25	70	35	50	25.5	55	M30×3.5	2	60	6-M20	61	135
HC-18A11	450	130	300	196.869	22	6	260	235.0	-	6-M20	33	43	108	100	48.75	23.25	70	35	50	25.5	55	M30×3.5	2	60	3-M10	61	135
HC-21A08	530	146	380	139.719	27	6	330.2	171.4	-	6-M16	23	60	86	78	93.5	27.5	70	35	65	25	55	M30×3.5	3	60	6-M22	71	180
HC-21A11	530	146	380	196.869	27	6	330.2	235.0	-	6-M20	28	60	86	78	93.5	27.5	70	35	65	25	55	M30×3.5	3	60	6-M22	71	180
HC-21A15	530	146	380	285.775	27	6	330.2	330.2	-	6-M22	34	60	86	78	93.5	27.5	70	35	65	25	55	M30×3.5	3	60	3-M12	71	180
HC-24A11	610	146	380	196.869	27	6	330.2	235.0	-	6-M20	28	60	125	117	93.5	27.5	70	35	65	25	55	M30×3.5	3	60	6-M22	71	180
HC-24A15	610	146	380	285.775	27	6	330.2	330.2	-	6-M22	34	60	125	117	93.5	27.5	70	35	65	25	55	M30×3.5	3	60	6-M12	71	180

※ The numbers in parentheses in columns P and T are also available upon request.

TECHLEADER® TOOLING INC.

SAMCHULLY MACHINERY CO., LTD.

HCA - Closed Center Chuck With Adaptor

HCA | Maximum Gripping Force

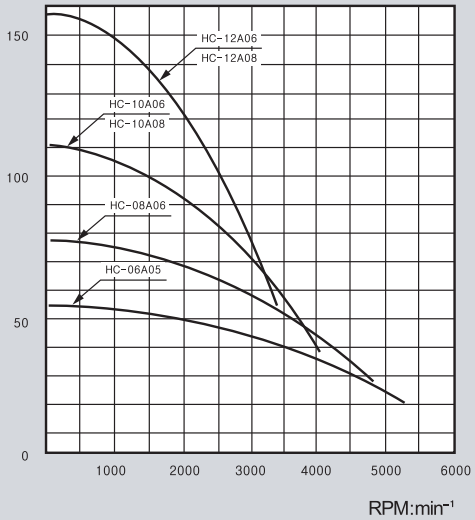

Fig 1

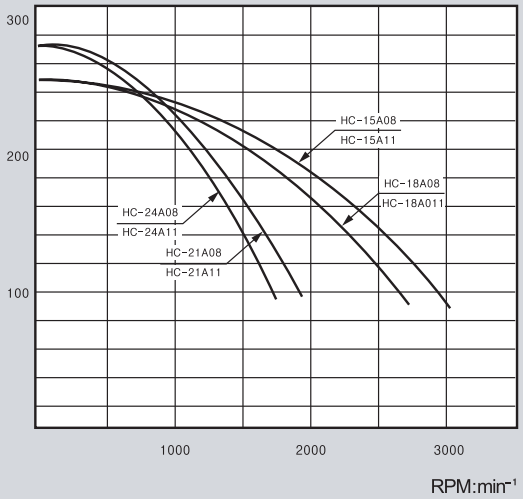

Fig 2

*Available in a 4-Jaw version.

Specifications

	Spindle Nose No.	Jaw STROKE Diameter. (mm)	PLUNGER STROKE (mm)	Grip Dia. (mm) Max.	Grip Dia. (mm) Min.	Permissible Input Force KN(kgf)	Max. Static Gripping Force KN(kgf)	Max.r.p.m KN(kgf)	weight kgf	GD² N·m²(kgf·m²)	Operrating Cylinder Hydraulic	Operrating Cylinder Pneumatic	Max. Hydraulic Pressure MPa(kgf/ cm²)	Operrating HARD JAW	KITAKAWA Model	ORDER NO.
HC-06A05	A2-5	8.5	20	165	19	18 (1835)	52.5 (5353)	5270	14	1.96 (0.20)	Y-1020R	AY-1720R	2.6 (26.5)	GT06	N-06A05	445-161
HC-08A06	A2-6	8.8	21	210	23	25 (2549)	75 (7648)	4760	27	5.79 (0.59)	Y-1225R	AY-2225R	2.5 (25.5)	GT08	N-08A06	445-167
HC-10A06	A2-6	8.8	25	254	24	29 (2957)	108 (11013)	4010	40	13.14 (1.34)	Y-1225R	AY-2225R	2.8 (28.6)	GT10	N-10A06	445-171
HC-10A08	A2-8	8.8	25	254	24	29 (2957)	108 (11013)	4010	40	12.84 (1.31)	Y-1225R	AY-2225R	2.8 (28.6)	GT10	N-10A08	445-172
HC-12A06	A2-6	10.5	30	304	26	41 (4181)	156 (15907)	3380	67	29.81 (3.04)	Y-1530R	-	2.7 (27.5)	GT12	N-12A06	445-176
HC-12A08	A2-8	10.5	30	304	26	41 (4181)	156 (15907)	3380	66	29.52 (3.01)	Y-1530R	-	2.7 (27.5)	GT12	N-12A08	445-177
HC-15A08	A2-8	16	35	381	71	82 (8362)	249 (25391)	3040	105	76.49 (7.8)	Y-2035R	-	3.2 (32.6)	GT15	N-15A08	445-181
HC-15A11	A2-11	16	35	381	71	82 (8362)	249 (25391)	3040	103	73.55 (7.5)	Y-2035R	-	3.2 (32.6)	GT15	N-15A08	445-182
HC-18A08	A2-8	16	35	450	133	82 (8362)	249 (25391)	2710	134	97.08 (9.9)	Y-2035R	-	3.2 (32.6)	GT15	N-18A11	445-186
HC-18A11	A2-11	16	35	450	133	82 (8362)	249 (25391)	2710	131	95.12 (9.7)	Y-2035R	-	3.2 (32.6)	GT15	N-18A11	445-187
HC-21A08	A2-8	16	35	530	62	82 (8362)	273 (27838)	1940	201	202.99 (20.7)	Y-2035R	-	3.2 (32.6)	HB18B2	N-21A08	445-191
HC-21A11	A2-11	16	35	530	62	82 (8362)	273 (27838)	1940	198	201.03 (20.5)	Y-2035R	-	3.2 (32.6)	HB18B2	N-21A11	445-192
HC-21A15	A2-15	16	35	530	62	82 (8362)	273 (27838)	1940	190	194.15 (19.9)	Y-2035R	-	3.2 (32.6)	HB18B2	N-21A15	445-193
HC-24A11	A2-11	16	35	610	152	82 (8362)	273 (27838)	1760	241	289.28 (29.5)	Y-2035R	-	3.2 (32.6)	HB18B2	N-24A11	445-196
HC-24A15	A2-15	16	35	610	152	82 (8362)	273 (27838)	1760	234	276.54 (28.2)	Y-2035R	-	3.2 (32.6)	HB18B2	N-24A15	445-197

※ Refer to figure 2 for HC-10A06, HC-12A06, HC-15A08, HC-18A08, HC-21A08, HC-21A11, and HC-2411.
※ Specifications are subject to change without notice.

TECHLEADER® TOOLING INC.

SAMCHULLY MACHINERY CO., LTD.

4 Jaw Closed-Center Chuck

MODEL: HCF

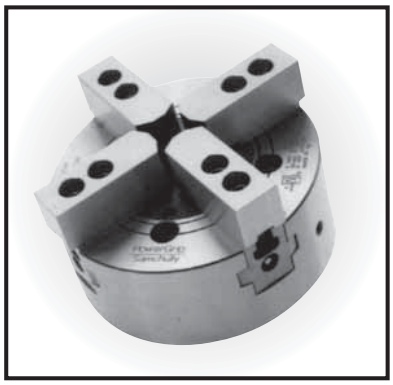

MAKE SURE YOU GREASE YOUR CHUCK WITH CHUCK-EEZ®.
SEE PAGE 5-94

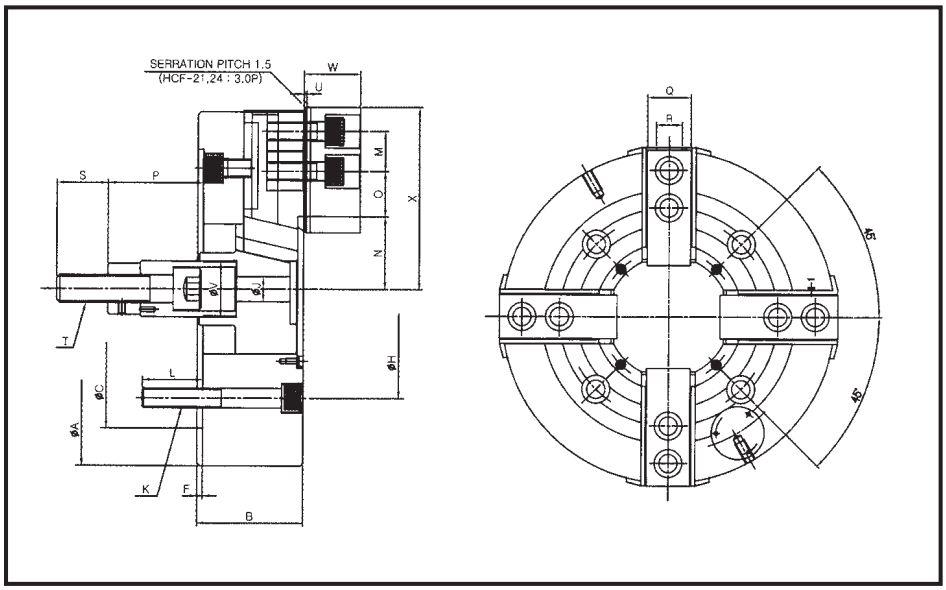

Dimentions

Order No.		A	B	C (H6)	F	H	J	K	L	M	N max.	N min.	O max.	O min.	P max.	P min	Q	R	S	T	U	V	W	X
445-311	HCF-12	304	106	220	6	171.4	34	4-M16	38	30	61	557	48.75	12.75	163	133	50	18	36	M20X2.5	5	50	54	129
445-315	HCF-15	381	114	300	6	235	27	4-M20	65	43	78	70	48.75	23.25	104	69	50	26	55	M30X3.5	2	60	61	135
445-318	HCF-18	450	114	300	6	235	27	4-M20	30	43	108	100	48.72	23.25	92	57	50	26	55	M30X3.5	2	60	60	135
445-320	HCF-21	530	125	380	6	330.2	27	8-M22	61	60	86	78	93.5	27.5	97	62	65	25	55	M30X3.5	3	60	71	180
445-324	HCF-24	610	125	380	6	330.2	27	8-M22	31	60	125	117	93.5	27.5	97	62	65	25	55	M30X3.5	3	60	70	180

** Bank and machined draw nuts are availble. * HCF-21 and HCF-24 are available with M22 or M24 mounting bolts.*

Specifications

Order No.		Jaw Stroke Diameter (mm)	Thru Hole Diameter	Grip Diameter (mm)		Permissible Input Force KN(kgf)	Max. Static Gripping Force KN(kgf)	Max rpm min^{-1} (rpm)	Weight kgf	GD2 N•m² (kgf•m²)	Operating Cylinder	Max. Hydralic Pressure MPa (kgf/cm²)
				Max.	Min.							
445-311	HCF-12	10.5	30	304	26	27.5 (2804)	104 (10605)	3000	55	27.7 (2.83)	Y-1530R (RE)	1.8 (18.4)
445-315	HCF-15	16	35	381	71	54.6 (5575)	165.8 (16927)	3040	98	72.6 (7.4)	Y-2035R (RE)	2.13 (21.7)
445-318	HCF-18	16	35	450	133	54.6 (5575)	165.8 (16927)	2710	124	92.2 (9.4)	Y-2035R (RE)	2.13 (21.7)
445-320	HCF-21	16	35	530	62	54.6 (5575)	183 (18550)	1700	180	188.3 (19.2)	Y-2035R (RE)	2.13 (21.7)
445-324	HCF-24	16	35	610	152	54.6 (5575)	183 (18550)	1500	223	271.7 (27.7)	Y-2035R (RE)	2.13 (21.7)

** Maximum Turning speed is based on actual measurements.*
** Specifications are subject to change without notice.*

TECHLEADER® TOOLING INC.

SAMCHULLY MACHINERY CO., LTD.

Adaptor Plates

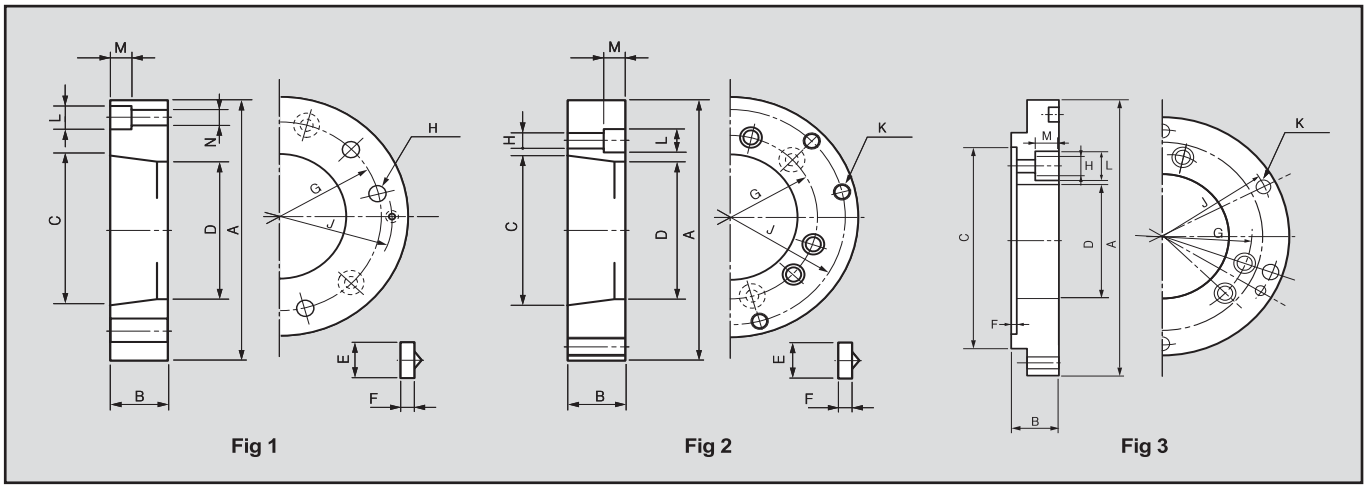

Fig 1 Fig 2 Fig 3

Fits ASA B5.9 type A (DIN 55026) Spindles

Standard Adaptor Plates

	Spindle Nose	Standard Thickness	Available Thickness	A	B	C	D	E	F	G	H	J	K	L	M	N	Fig	Corresponding Chuck
AP06A05	A2-5	15	15	140	15	82.563	79.7	16.3	6.5	104.78	12	116	-	11	7	6.6	1	HC, HCH,HS -06
APT06A05	A2-5	15	15	140	15	82.563	79.7	16.3	6.5	104.78	12	116	-	11	7	6.6	-	HCT, HST, HTH -06
AP08A05	A2-5	25	25	170	25	82.563	79.7	16.3	6.5	104.78	12	133.35	M12	18	11.5	-	2	HC, HCH,HS, HCT HST, HTH -08
AP08A06	A2-6	17	17,25, 33,26	170	17	106.375	103.0	19.45	6.5	133.35	13.5	150	-	11	7	6.6	1	HC, HCH,HS,HH -08
APT08A06	A2-6	17	17,22,26	170	17	106.375	103.0	19.45	6.5	133.35	13.5	150	-	11	7	6.6	-	HCT, HST, HTH -08
APF08A06	A2-6	-	17	170	17	106.375	103.0	19.45	6.5	133.35	13.5	150	-	11	7	6.6	1	HSF, HCHF,HCF -08
AP10/12A06	A2-6	25	18,20,25, 28,42	220	25	106.375	103.0	19.45	6.5	133.35	13.5	171.45	M16	20	13.5	-	2	HC, HS.HCH, HCT HST, HTH -10, 12
APF10A08	A2-8	-	18	220	18	139.719	136.0	24.2	8	171.45	18	171.45	M16	26	25	-	2	HSF, HCHF,HCF -10
AP10/12A08	A2-8	18	18,28,42	220	18	139.719	103.0	24.2	8	171.45	17	190	-	14	10	9	1	HC, HCH,HS -10, 12
APT10/12A08	A2-8	18	18,28	220	18	139.719	136.0	24.2	8	171.45	17	190	-	14	10	9	-	HCT, HST, HTH -10, 12
AP15/18A11	A2-11	22	22,24,37, 42,45	300	22	196.870	192.9	29.36	10	235	21	260	-	17	11	11	1	HC-15,18 HCH-15

Special Adaptor Plates

	Spindle Nose	Available Thickness	A	B	C	D	E	F	G	H	J	K	L	M	N	Fig	Corresponding Chuck
AP06A06	A2-6	33	140	33	106.375	70	19.45	6.5	133.35	14	104.78	M10	20	18.5	-	2	HC, HCH, HS -06
AP08A08	A2-8	30	170	30	139.719	103	24.2	8	171.45	18	133.35	M12	26	23	-	2	HC, HCH, HS -08
AP12A11	A2-11	22,45,46	300	46	197.870	192.9	29.36	10	235	21	260	-	17	11	11	1	HH -212
AP15A08	A2-8	22,33,37	300	37	139.719	135.46	24.2	8	171.45	18	235	M20	-	-	-	2	HC-15, HCH-15
AP18A11	A2-11	22	380	22	197.870	192.9	29.36	10	235	21	260	-	17	11	11	1	HCH-18
AP21/24A11	A2-11	27,42	380	42	197.870	192.9	29.36	10	235	21	330.2	M22	32	21	-	2	HC, HCH-21 HC, HCH-24
AP21/24A15	A2-15	27	380	27	285.777	250	35.7	10	330.2	24	330.2	-	20	13	14	1	HC, HCH-21 HC, HCH-24
AP32A15	A2-15	33	380	33	285.777	220	35.7	10	330.2	26	330.2	-	20	13	14	1	HC-32
AP40A20	A2-20	48	520	48	380	270	-	8	330.2	26	463.6	M24	39	25	-	3	HC-40

※ Special adoptor plates may be slightly different than the referenced figure.

TECHLEADER® TOOLING INC.

SAMCHULLY MACHINERY CO., LTD.

Hydraulic Chuck Components

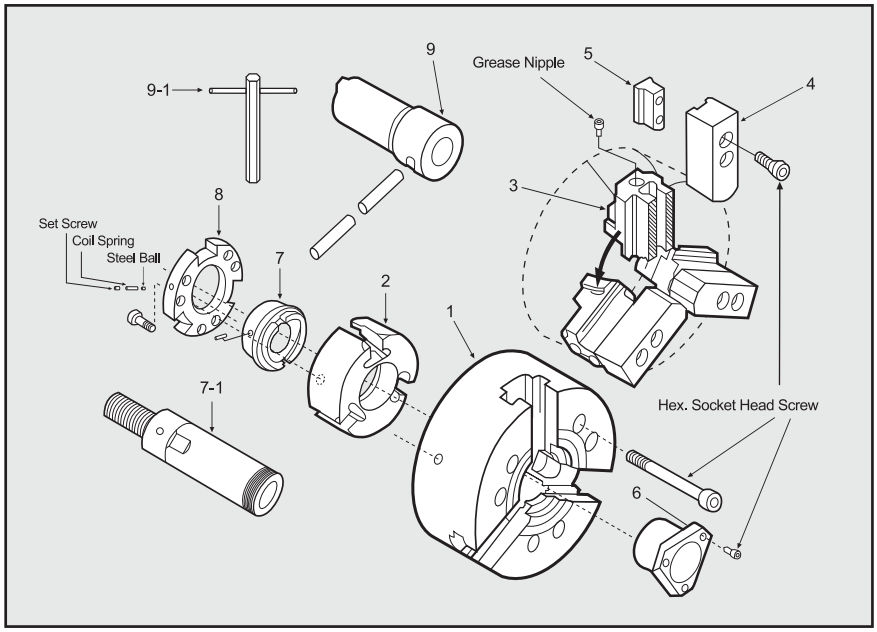

ITEM NO.	DESCRIPTION	Q' TY
1	BODY	1
2	WEDGE PLUNGER	1
3	MASTER JAW	3
4	SOFT JAW/HARD JAWS	3
5	T-NUT	3
6	COVER	1
7	DRAW NUT(Open Center)	1
7-1	DRAW TUBE(Closed Center)	1
8	PLUNGER NUT(Open Center)	1
9	HANDLE(Open Center)	1
9-1	HANDLE(Closed Center)	1

WEDGE PLUNGER HS/HAS

ORDER NO.	PART NO. 2
445-860	WP-HS 06
445-861	WP-HS 08
445-862	WP-HS 10
445-863	WP-HS 12

WEDGE PLUNGER HCH

ORDER NO.	PART NO. 2
445-895	WP-HST 15
445-896	WP-HST 18
445-897	WP-HST 21
445-898	WP-HST 24

WEDGE PLUNGER HST

ORDER NO.	PART NO. 2
445-865	WP-HST 15
445-866	WP-HST 18
445-867	WP-HST 21
445-868	WP-HST 24

WEDGE PLUNGER HH

ORDER NO.	PART NO. 2
445-640	WP-HH 206
445-641	WP-HH 208
445-643	WP-HH 212

MASTER BASE JAWS HS/HAS

ORDER NO.	PART NO. 3
445-620	MJ-HS 05
445-621	MJ-HS 06
445-622	MJ-HS 08
445-623	MJ-HS 10
445-624	MJ-HS 12

MASTER BASE JAWS HCH/HAH

ORDER NO.	PART NO. 3
445-632	MJ-HS 15
445-633	MJ-HS 18
445-634	MJ-HS 21
445-635	MJ-HS 24

MASTER BASE JAWS HH

ORDER NO.	PART NO. 3
445-640	MJ-HH 206
445-641	MJ-HH 208
445-643	MJ-HH 212

HARD JAWS - SET OF 3

ORDER NO.	PART NO. 4
445-700	HB04N1 1-STEP HS 04 & 05
445-702	HB04N1 1-STEP HS06
GT06	2-STEP HS06 & HH206
GT08	2-STEP HS08 & HH208
GT10	2-STEP HS10
GT13	2-STEP HS12 & HH212
GT15	2-STEP HCH 15 & 18
445-710	HB15N1 1-STEP HC 15
445-711	HB18B2 1-STEP HC, HCH, 21 & 24

JAWS NUTS

ORDER NO.	PART NO. 5
445-540	TN-HS, HST 04 & 05
GP07	TN-HS, HSL HST 06
GP09	TN-HS, HSL HST 08
GP11	TN-HS, HSL HST 10
GP13	TN-HS, HSL HST 12
GP15	TN-HCH 15 & 18
445-569	TN-HC 21-24

CHIP COVERS & PLUG/HS

ORDER NO.	PART NO. 6
445-581	CP-HS-05
445-582	CP-HS-06
445-586	CP-HS-08
445-592	CP-HS-010
445-596	CP-HS-012

CHIP COVERS & PLUG/HCH

ORDER NO.	PART NO. 6
445-599	CP-HCH-15
445-600	CP-HCH-18
445-603	CP-HCH-21
445-606	CP-HCH-24

CHIP COVERS & PLUG/HH & MH

ORDER NO.	PART NO. 6
445-610	CP-HH206
445-611	CP-HH208
445-612	CP-HH210
445-613	CP-HH212

DRAW NUT HAS/HAS/HST

ORDER NO.	PART NO. 7
445-831	DN-HS 04
445-832	DN-HS 05
445-833	DN-HS 06
445-834	DN-HS 08
445-835	DN-HS 10
445-836	DN-HS 12

DRAW NUT HCH

ORDER NO.	PART NO. 7
445-851	DN-HCH 15
445-852	DN-HCH 18
445-853	DN-HCH 21
445-854	DN-HCH 24

DRAW NUT HH

ORDER NO.	PART NO. 7
445-856	DN-HH 206
445-857	DN-HH 208
445-859	PN-HH 212

PLUNGER DRAW NUT HAS/HAS/HST

ORDER NO.	PART NO. 8
445-770	PN-HS 04
445-771	PN-HS 05
445-777	PN-HS 06
445-781	PN-HS 08
445-785	PN-HS 10
445-790	PN-HS 12

PLUNGER DRAW NUT HCH

ORDER NO.	PART NO. 8
445-786	PN-HCH 15
445-787	PN-HCH 18
445-788	PN-HCH 21
445-789	PN-HCH 24

PLUNGER DRAW NUT HH

ORDER NO.	PART NO. 8
445-791	PN-HH 206
445-792	PN-HH 208
445-794	PN-HH 212

HANDLE & BAR HS/HCH

ORDER NO.	PART NO. 9
445-910	HDL HS/HCH-04
445-911	HDL HS/HCH-05/06
445-912	HDL HS/HCH-08
445-913	HDL HS/HCH-10
445-914	HDL HS/HCH-12
445-915	HDL HS/HCH-15/16
445-916	HDL HS/HCH-21/24

HANDLE & BAR HH & MH

ORDER NO.	PART NO. 9
445-920	HDL-HH 206
445-921	HDL-HH 208
445-922	HDL-HH 210
445-923	HDL-HH 212

TECHLEADER® TOOLING INC.

SAMCHULLY MACHINERY CO., LTD.

SH - High Speed Open Center Rotary Hydraulic Cylinder

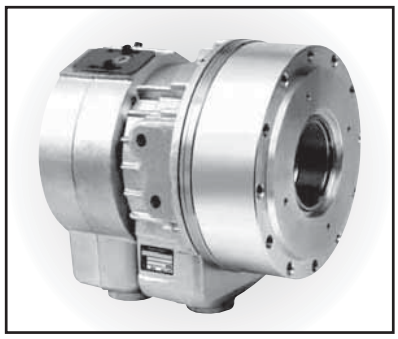

- Light-weight, high-speed hydralic cylinder with thru hole.
- 20% reduction in body length and cylinder weight.
- 20% larger thru hole than standard models.
- Built in lock and relief valves.

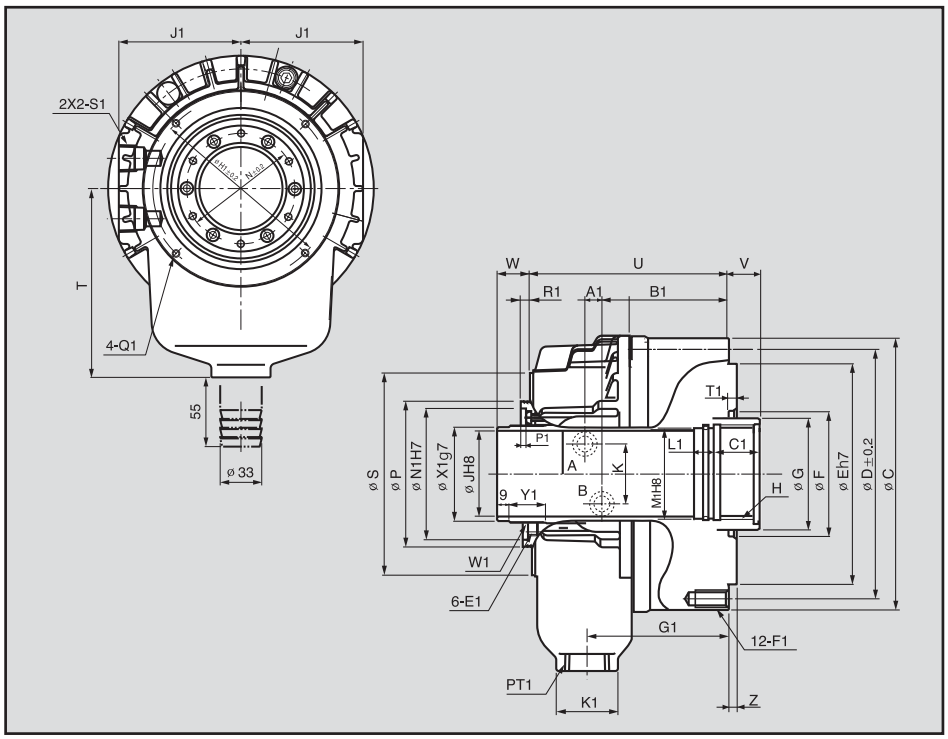

Dimensions

	C	D	E	F	G	H	J	K	N	P	S	T	U	Vmax.	Vmin.	Wmax.	Wmin.	Z	A1	B1	C1
SH-13046	165	130	100	80	65	M52×2	46	40	64	85	116	120	142	15	0	40	25	5	8.5	103	30
SH-15052	190	170	130	85	70	M60×2	52	40	73	96	135	130	138	22	0	47	25	5	9.0	97.5	30
SH-17068	210	190	160	120	85	M75×2	68	48	88	111	154	150	155	25	0	50	25	5	10	108	35
SH-18077	218	190	160	120	95	M85×2	77	48	108	121	164	165	167	25	0	50	25	5	10	119.5	35
SHL-25011	310	275	230	166	140	M130×2	117.5	46	138	170	230	215	258	46	-4	75	25	6	19	176.5	45

	E1	F1DP'	G1	H1	J1	K1	L1	M1	N1	P1	Q1	R1	S1	T1	W1	X1	Y1
SH-13046	M6	M10×20	111	98	82	47	15	48	76	4	M5×6	6	PT1/2	6	M52×1.5	50	24
SH-15052	M6	M10×20	101	110	92	47	15	55	85	4	M6×7	7	PT1/2	5	M58×1.5	56	20
SH-17068	M6	M10×20	113	145	97	47	15	70	100	4	M6×10	7	PT1/2	5	M74×1.5	71.5	26
SH-18077	M6	M10×20	125	155	102	47	15	80	108	4	M6×10	7	PT1/2	5	M84×2.0	81	26
SHL-25011	M6	M16×32	190.5	206	140	47	20	123	150	5.5	M6×12	7.5	PT1/2	6	M124×2.0	121.5	29

Specifications

	Available I.D.	Cyinder Diameter (mm)	PISTON STROKE (mm)	Piston force push KN(kgf)	Piston force pull KN(kgf)	Max. Operating Pressure MPa(kgf/ cm²)	Max. r.p.m min⁻¹(r.p.m)	GD² N·m²(kgf·m²)	weight kgf	Total Leakage ℓ (min)	ORDER NO.
SH-13046	46	135	15	42.3(4285)	38.1(3865)	4.0(40.8)	7000	0.2(0.021)	10	3.0	445-318
SH-15052	52	156	22	60(6118)	56(5710)	4.0(40.8)	6200	0.44(0.045)	14	3.9	445-320
SH-17068	68	170	25	63(6531)	59.8(6060)	4.0(40.8)	5600	0.65(0.067)	16.5	4.0	445-322
SH-18077	77	185	25	75.3(7632)	69.6(7087)	4.0(40.8)	5000	0.83(0.084)	18	4.2	445-324
SHL-25011	117.5	255	50	132(13390)	121(12305)	4.0(40.8)	2800	1.9(0.193)	40	7.0	445-330

※Specifications and dimensions for off sizes may vary. ※Specifications are subject to change without notice.

TECHLEADER® TOOLING INC.

SAMCHULLY MACHINERY CO., LTD.

SYH - High Speed Open Center Cylinder

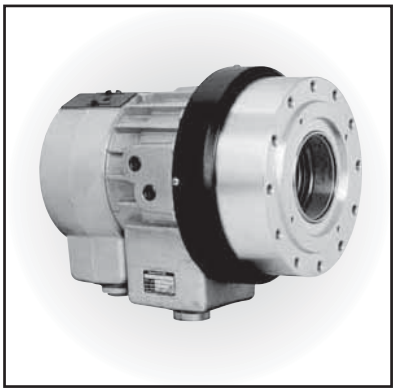

- High-speed, open-center rotary hydraulic cylinder with large thru hole.
- Built in lock and relief valves.

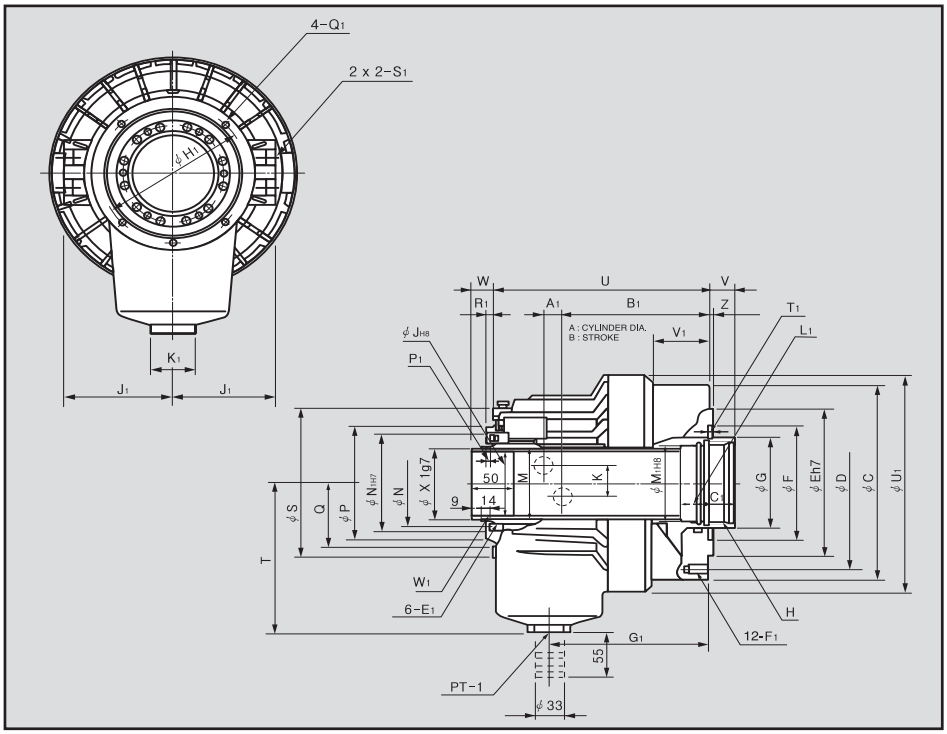

Dimensions

	C	D	E	F	G	H	J	K	M	N	P	Q	S	T	U	Vmax.	Vmin.	Wmax.	Wmin.	Z	A1
SYH-1036	135	115	100	65	48	M42×1.5	36	30	44.6	55	73	45	104	115	156	15	0	40	25	5	11
SYH-1246	155	130	100	80	65	M55×2.0	46	36	52.9	64	85	51.5	118	115	184	15	0	40	25	5	11.5
SYH-1552	190	170	130	85	70	M60×2.0	52	36	59.6	73	96	57	137	130	191	22	0	47	25	5	12
SYH-1875	215	190	160	120	95	M85×2.0	75	36	84.6	98	121	70	166	160	230	25	0	50	25	5	17.5
SYH-2091	240	215	180	140	110	M100×2.0	91	34	99.6	108	138	79	182	185	253	30	0	55	25	5	21
SYH-2816	325	298	220	195	190	M175×3.0	165	30	174.6	188	222	120	282	250	332.5	42	12	55	25	7	28

	B_1	C_1	E_1	F_1	G_1	H_1	J_1	K_1	L_1	M_1	N_1	P_1	Q_1	R_1	S_1	T_1	U_1	V_1	W_1	X_1
SYH-1036	102.5	25	M5×11	6-M10×17	98	88	73	47	15	38	64	4	M5×10	5	PT3/8	6	158	28	M44×1.5	42
SYH-1246	126.5	30	M6×9	12-M10×20	135	98	76	47	15	50	76	4	M5×10	6	PT1/2	6	200	46	M52×1.5	50
SYH-1552	136	30	M6×9	12-M10×20	145	110	86	47	15	55	85	4	M6×12	7	PT1/2	6	220	51	M58×1.5	56
SYH-1875	153.5	35	M6×9	12-M10×20	166.5	155	101	47	15	80	108	4	M6×12	7	PT1/2	6	242	58	M84×2.0	81
SYH-2091	168	35	M6×14	12-M12×24	183	165	110	47	15	95	120	4	M6×12	7	PT1/2	6	267	66	M99×2.0	96
SYH-2816	221.5	45	M6×12	12-M12×26	238.5	256	162	47	-	-	200	4	M6×12	7	PT916-18UNF	7	352	85.5	M173×2.0	170.5

Specifications

	Available I.D.	Cyinder Diameter (mm)	PISTON STROKE (mm)	Piston Surface Area push cm²	Piston Surface Area pull cm²	Piston force push KN(kgf)	Piston force pull KN(kgf)	Max. Operating Pressure MPa(kgf/ cm²)	Max. r.p.m min⁻¹(r.p.m)	GD² N·m²(kgf·m²)	weight kgf	Total Leakage ℓ (min)	Comparable Kitagawa† Model	ORDER NO.
SYH-1036	36	105	15	67	64.5	25(2549)	24(2447)	4.0(40.8)	8000	0.43(0.044)	8.6	3.0	S-1036	445-358
SYH-1246	36,39,40,41 43,45,46	125	15	100	89	38(3875)	33(3365)	4.0(40.8)	7000	0.76(0.078)	12.0	3.0	S-1246	445-360
SYH-1552	46,52,69	155	22	161	150	60(6118)	56(5710)	4.0(40.8)	6200	2.06(0.21)	16.8	3.9	S-1552	445-362
SYH-1875	68,69,75,77	180	25	198	183	74(7546)	69(7036)	4.0(40.8)	4700	3.73(0.83)	26.0	4.2	S-1875	445-364
SYH-2091	78,91	205	30	252	234	94(9585)	88(8973)	4.0(40.8)	3800	5.98(0.61)	33.0	4.5	S-2091	445-366
SYH-2816	165	280	30	377	332	113(11522)	100(10196)	3.3(33.6)	2000	30.92(3.15)	98	8.4	-	445-368

※ Specifications and dimensions for off sizes may vary. ※ Certain models have several thru-hole sizes available. ※ Specifications are subject to change without notice.
※ The bore threading varies according to I.D.. The threading in colum H applies to the standard I.D. in column J. † Kitagawa is a registered trade mark of Kitagawa Iron Works Co. Ltd.

TECHLEADER® TOOLING INC.

SAMCHULLY MACHINERY CO., LTD.

HYH - Standard Open-Center Rotary Hydraulic Cylinder

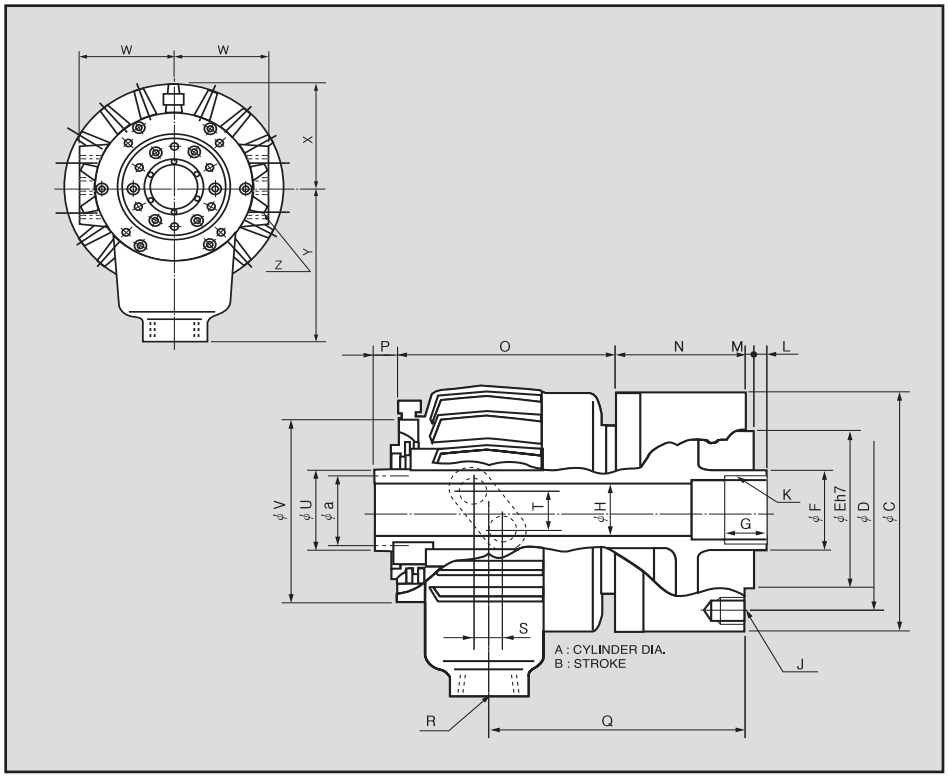

- Open-center rotary hydraulic cylinder with large thru hole.
- Built in lock and relief valves.

Dimensions

	A	B	C	D	E(h7)	F	G	H	J	K	Lmax.	Lmin.	M	N
HYH-0933	95	12	125	100	80	45	25	33.5	6-M8×15	M40×1.5	+7	-5	5	71
HYH-1236	125	12	155	130	100	50	25	36	12-M10×20	M42×1.5	+7	-5	5	78
HYH-2511	250	23	310	275	230	140	45	117.5	12-M16×32	M130×2.0	+18	-5	6	101

	O	Pmax.	Pmin.	Q	R	S	T	U	V	W	X	Y	Z	a
HYH-0933	119	41	29	142	PT 3/4	11.8	22	M39×1.5	104	64	67	110	2×2-PT 1/4	-
HYH-1236	134	25	13	157	PT 1	14	26	49.6	118	69	80	120	2×2-PT 3/8	43
HYH-2511	209	38	15	217	PT 1	27	20	134.6	232	125	135.5	215	2×2-PT 3/8	127

Specifications

	Thru Hole Diameter (mm)	PISTON STROKE (mm)	Piston Surface Area		Piston force		Max. Operating Pressure MPa(kgf/ cm²)	Total Leakage ℓ (min)	Max. r.p.m min⁻¹(r.p.m)	weight kgf	GD² N·m²(kgf·m²)	Comparable Kitagawa† Model	ORDER NO.
			push cm²	pull cm²	push KN(kgf)	pull KN(kgf)							
HYH-0933	33	12	58	55	22.0(2243)	20.6(2100)	4.0(40.8)	3.0	8000	8.5	0.31(0.032)	F-0933H	445-403
HYH-1236	36	12	103	103	37.0(3773)	37(3773)	4.0(40.8)	3.0	6700	13	0.88(0.09)	F-1236H	445-404
HYH-2511	117.5	23	348	336	125.0(12746)	120(12236)	4.0(40.8)	7.0	2800	60	17.5(1.78)	F-2511H	445-405

※ Specifications are subject to change without notice. † Kitagawa is a registered trade mark of Kitagawa Iron Works Co. Ltd.

TECHLEADER® TOOLING INC.

SAMCHULLY MACHINERY CO., LTD.

Y-R – Closed-Center Rotary Hydraulic Cylinder

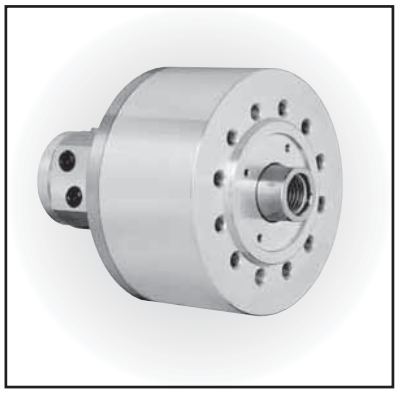

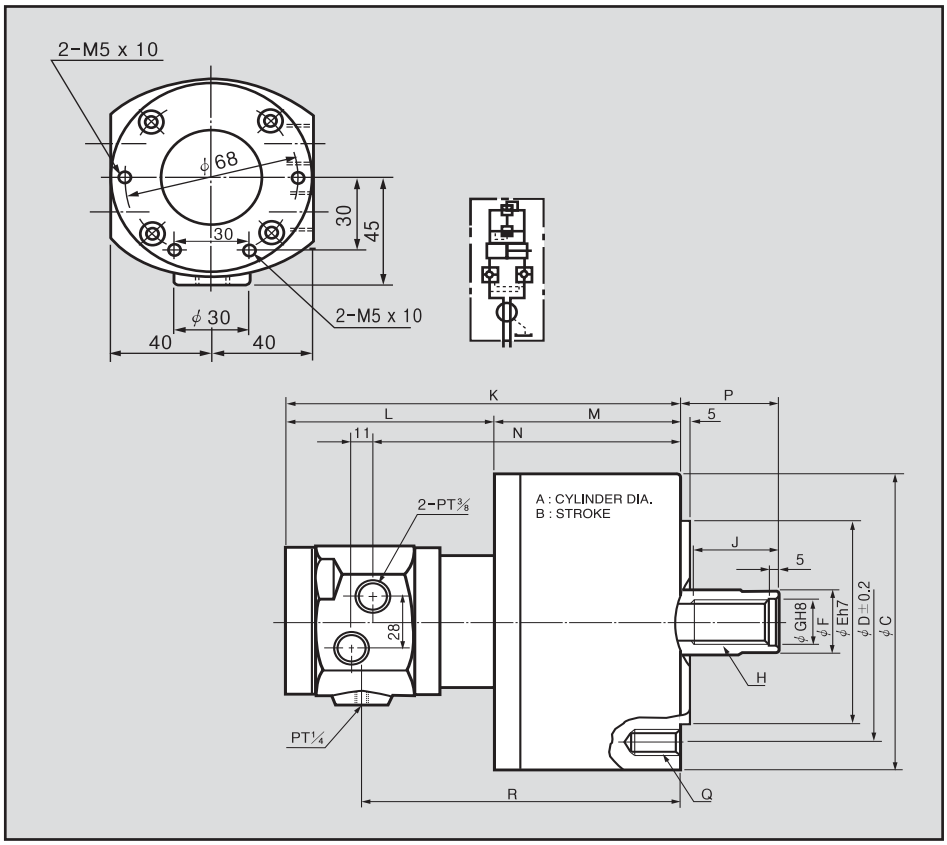

- Closed-center, rotary hydraulic cylinder.
- Built in lock and relief valves.

MAKE SURE YOU GREASE YOUR CHUCK WITH CHUCK-EEZ®.
SEE PAGE 5-94

Dimensions

	A	B	C	D	E	F	G	H	J	K	L	M	N	Pmax.	Pmin.	Q	R
Y-0715R	75	15	104	90	65	30	21	M20×2.5	35	172	106	66	127	46	31	6-M6×20	133
Y-1020R	105	20	135	100	80	30	21	M20×2.5	35	197	108	89	152	45	25	6-M10×20	158
Y-1225R	125	25	160	130	110	35	25	M24×3.0	44	205	108	97	160	51	26	6-M12×24	166
Y-1530R	150	30	190	130	110	45	31	M30×3.5	45	214	108	106	169	56	26	12-M12×24	175
Y-2035R	200	35	245	145	120	55	37	M36×4.0	60	228	106	122	183	69	34	12-M16×30	189

Specifications

	PISTON STROKE (mm)	Piston Surface Area		Piston force		Max. Operating Pressure MPa(kgf/ cm²)	Total Leakage ℓ (min)	Max. r.p.m min⁻¹(r.p.m)	weight kgf	GD² N·m²(kgf·m²)	Comparable Kitagawa† Model	ORDER NO.
		push cm²	pull cm²	push KN(kgf)	pull KN(kgf)							
Y-0715R	15	44	37	16.6(1693)	13.9(1417)	4.0(40.8)	0.8	6000	4.0	0.118(0.012)	Y-0715R	445-410
Y-1020R	20	86	79	2.0(3264)	29(2957)	4.0(40.8)	0.8	6000	7.1	0.49(0.05)	Y-1020R	445-411
Y-1225R	25	122	113	46.0(4692)	42(4283)	4.0(40.8)	0.8	6000	10	0.88(0.09)	Y-1225R	445-412
Y-1530R	30	176	160	66.0(6732)	60(6118)	4.0(40.8)	0.8	5500	13.5	1.86(0.19)	Y-1530R	445-413
Y-2035R	35	314	290	117.0(11934)	108(11013)	4.0(40.8)	0.8	5500	22	3.82(0.39)	Y-2035R	445-414

※ Total leakage pressure: 3.0 Mpa (30.6 kgf/cm2) at 50¡ÆC. ※ Specifications are subject to change without notice. † Kitagawa is a registered trade mark of Kitagawa Iron Works Co. Ltd.

TECHLEADER® TOOLING INC.

SAMCHULLY MACHINERY CO., LTD.

AY-R – Closed-Center Rotary Air Cylinder

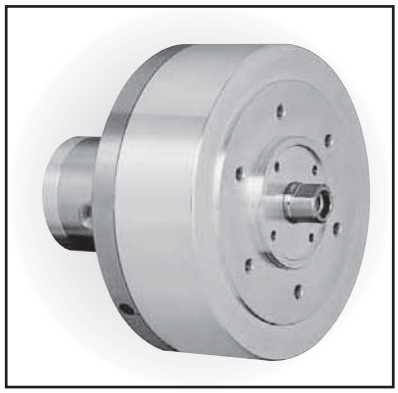

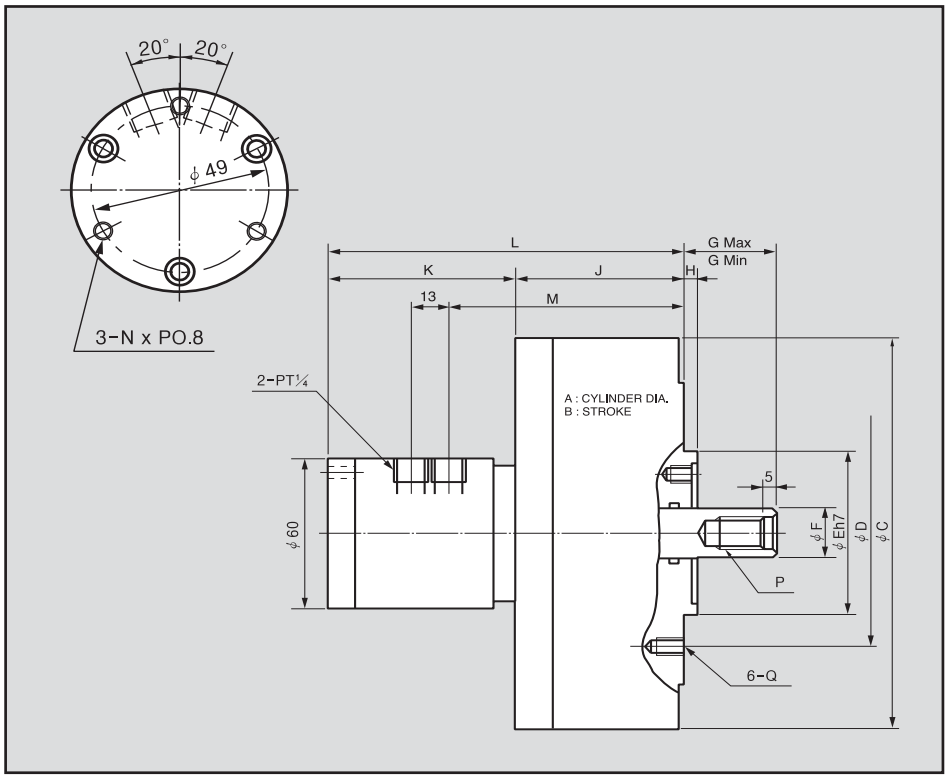

- Closed-center rotary air cylinder.
- Simplistic design reduces maintenance.

MAKE SURE YOU GREASE YOUR CHUCK WITH CHUCK-EEZ®.
SEE PAGE 5-94

Dimensions

	A	B	C	D	E(h7)	F	G max.	G min.	H	J	K	L	M	N	Q	P
AY-1005R	100	5	128	90	65	20	30	25	5	53	70	123	79	M5	M6×11	M12×22
AY-1315R	130	15	156	90	65	20	35	20	5	63	70	133	89	M5	M6×11	M12×22
AY-1720R	170	20	200	100	80	25	65	45	5	82	70	152	108	M5	M10×16	M16×30
AY-2225R	220	25	255	130	110	30	71	46	5	93	70	163	119	M5	M12×20	M20×35
AY-2730R	270	30	305	130	110	35	76	46	5	103	74.5	177.5	133.5	M5	M12×20	M24×40

Specifications

	PISTON STROKE (mm)	Piston Surface Area push cm²	Piston Surface Area pull cm²	Piston force (5kgf/ cm²)	Max. Operating Pressure (kgf/ cm²)	Max. r.p.m (r.p.m)	weight kgf	GD² N·m²(kgf·m²)	ORDER NO.
AY-1005R	5	78.5	73.6	515.2	8	5000	4.1	0.07	445-435
AY-1315R	15	131.0	128.0	770	8	5000	5.2	0.07	445-436
AY-1720R	20	225.0	220.1	1320	8	5000	8.3	0.11	445-437
AY-2225R	25	378.0	371.1	2230	8	4000	13.3	0.25	445-438
AY-2730R	30	570.4	560.8	3370	8	3000	18.7	0.75	445-439

※ Specifications are subject to change without notice.

TECHLEADER® TOOLING INC.

KITAGAWA

Power Chucks
B & BT Series

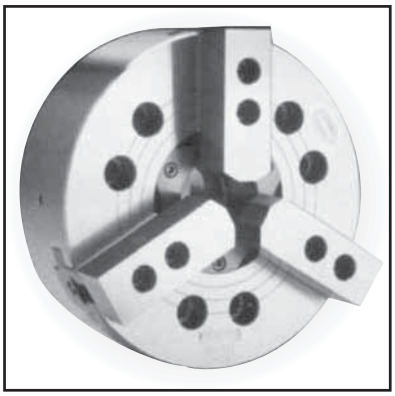

B Series

Three-jaw and two-jaw wedge style power chucks are ideal for high speed chucking, bar chucking and universal machining. These deliver consistent accuracy and repetitive chucking.

Special Features:

- Large Thru-Hole
- Strong Clamping force
- High Speed
- Compact and Lightweight
- Direct Mount
- High Accuracy and High Endurance

SPECIFICATIONS

MODEL	UNIT	B-15A08	B-15A11	B-18A08	B-18A11	B-21A11	B-21A15	B-24A11	B-24A15
Spindle Nose		A2-8	A2-11	A2-8	A2-11	A2-11	A2-15	A2-11	A2-15
Thru-Hole	in.	4.626	4.626	4.626	4.626	5.512	5.512	6.496	6.496
Jaw Stroke (Diameter)	in.	0.417	0.417	0.417	0.417	0.417	0.417	0.417	0.417
Plunger Stroke	in.	0.906	0.906	0.906	0.906	0.906	0.906	0.906	0.906
Max. Draw Bar Pull Force	lbs.	15639	15639	15639	15639	19824	19824	19824	19824
Max. Gripping Force	lbs.	39648	39648	39648	39648	51542	51542	51542	51542
Max Speed	rpm	2500	2500	2000	2000	1700	1700	1400	1400
Net Weight	lbs.	245.8	230.6	405.0	380.0	540.7	528.6	638.8	627.8
GD^2	lbs.+ft^2	216.9	208.6	471.8	452.8	908.1	877.2	1628.8	1598.0
Matching Cylinder		F2511H	F2511H	F2511H	F2511H	F2511H	F2511H	F2511H	F2511H
Matching Soft Top Jaw		B015	B015	B015	B015	B018	B018	B018	B018
Matching Hard Top Jaw		GT15	GT15	GT15	GT15	HB18B2	HB18B2	HB18B2	HB18B2

MAKE SURE YOU GREASE YOUR CHUCK WITH CHUCK-EEZ®.
SEE PAGE 5-94

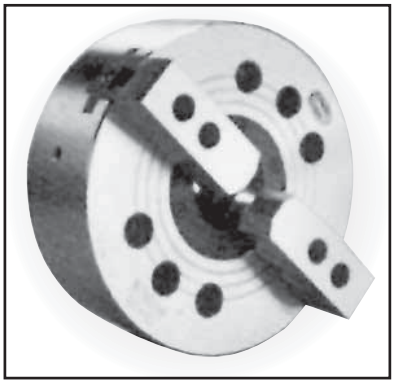

BT Series

MODEL	UNIT	BT15A08	BT15A11
Spindle Nose	øin.	A2-8	A2-11
Thru-Hole	in.	4.626	4.626
Jaw Stroke (Diameter)	in.	0.417	0.417
Plunger Stroke	in.	0.906	0.906
Max. Draw Bar Pull Force	lbs.	10352	10352
Max. Gripping Force	lbs.	26432	26432
Max Speed	rpm	2500	2500
Net Weight	lbs.	234.8	219.6
GD^2	lbs.+ft^2	199.4	191.1
Matching Cylinder		F2511H	F2511H
Matching Soft Top Jaw		B015	B015

U.S. Patent NO 4410192

TECHLEADER® TOOLING INC. | KITAGAWA

B & BT Series (CONT'D)

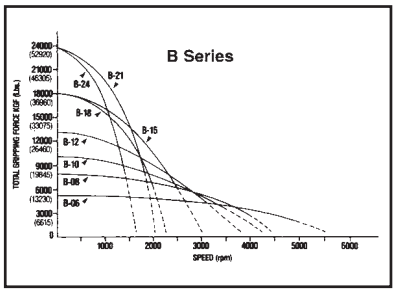

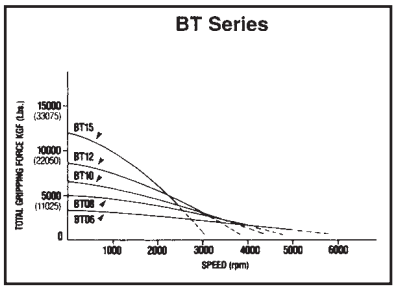

Gripping Characteristics Graphs

MAKE SURE YOU GREASE YOUR CHUCK WITH CHUCK-EEZ®.
SEE PAGE 5-94

Model B and BT Series Chucks are manufactured from high grade alloy steel. All sliding surfaces are hardened and ground to assure consistent accuracy and performance.

Lubrication nipple in each base jaw.

Master Jaw Serration:

Chuck size 6" to 18" 1.5mm x 60°
Chuck size 21" & 24" 3 mm x 60°

Mounting:

Direct mounting to fit ASA B5.9 type A (interchangeable with DIN 55026)

Standard Equipment:

Chuck assembled with adapter, chuck mounting bolts. T-nuts and jaw mounting bolts with wrench, draw nut wrench.

DIMENSIONAL DRAWINGS (Fig. 1)

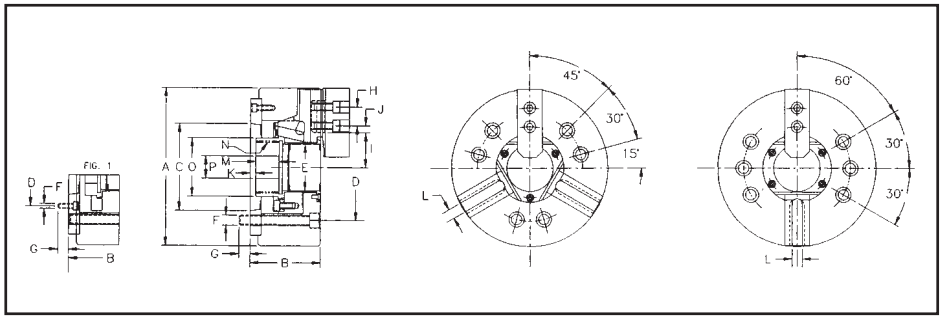

DIMENSIONS (Dimension in inches)

MODEL	B-15A08 BT-15A08	B-15A11 BT-15A11	B-18A08	B-18A11	B-21A11	B-21A15	B-24A11	B-24A15
A	15.000	15.000	17.717	17.717	20.866	20.866	24.016	24.016
B	6.299	5.866	6.299	5.866	6.890	6.339	7.244	6.9693
C	5.501	7.751	5.501	7.751	7.751	11.250	7.751	11.250
D	6.750	9.252	6.750	9.252	9.252	13000	9.252	13.000
E	4.626	4.626	4.626	4.626	5.512	5.512	6.496	6.496
F	6xM16	6xM20	6xM16	6xM20	6xM20	6xM22	6xM20	6xM22
G	0.945	1.102	0.945	1.102	1.181	1.339	1.181	1.378
H	1.693	1.693	1.693	1.693	2.362	2.362	2.362	2.362
I max.	3.228	3.228	3.228	3.228	3.878	3.878	4.252	4.252
I min.	3.020	3.020	3.020	3.020	3.669	3.669	4.043	4.043
J max.	1.724	1.724	3.083	3.083	3.448	3.448	4.630	4.630
J min.	0.719	0.719	0.719	0.719	0.847	0.847	0.847	0.847
K max.	1.732	1.299	1.732	1.299	2.047	1.496	2.402	1.850
K min.	0.827	0.394	0.827	0.394	1.142	0.591	1.496	0.945
L	0.866	0.866	0.866	0.866	0.984	0.984	0.984	0.984
M	1.299	1.299	1.299	1.299	1.299	1.299	1.378	1.378
N max.	M130x2.0	M130x2.0	M130x2.0	M130x2.0	M155x3.0	M155x3.0	M175x3.0	M175x3.0
O	5.472	5.472	5.472	5.472	6.693	6.693	7.362	7.362
P	2.362	2.362	2.362	2.362	3.150	3.150	3.150	3.150

B-15A08, B18A08, B-21A11, B-24A11, BT10A06, BT12A06, and BT15A08 are referred to in Fig. 1.
Draw nut is supplied without thread.

TECHLEADER® TOOLING INC. KITAGAWA

Power Chucks B200 & BT200 Series

Three-jaw and two-jaw wedge style power chucks deliver up to 20% more speed, gripping force and bore size when compared to conventional chucks. The B200 Series Chucks have the largest bores of any wedge style power chuck. These deliver consistent accuracy and repetitive chucking.

MAKE SURE YOU GREASE YOUR CHUCK WITH CHUCK-EEZ®.
SEE PAGE 5-94

Special Features:

- Large Thru-Hole
- Compact and Lightweight
- Strong Clamping Force
- Direct Mount
- High Speed
- High Accuracy and High Endurance

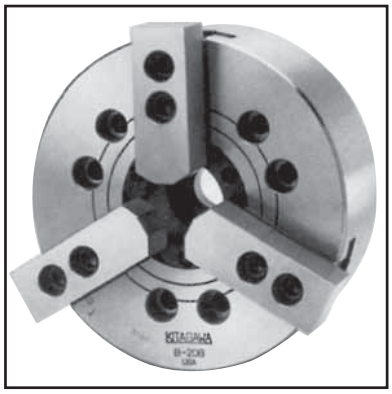

B200 Series

MODEL	UNIT	B204	B205	B206A05	B208A06	B210A06	B210A08	B212A06	B212A08
Spindle Nose		3.346	4.331	A2-5	A2-6	A2-6	A2-8	A2-6	A2-8
Thru-Hole	in.	1.024	1.299	1.772	2.047	2.953	2.953	3.583	3.583
Jaw Stroke (Diameter)	in.	0.213	0.213	0.217	0.291	0.346	0.346	0.417	0.417
Plunger Stroke	in.	0.394	0.394	0.472	0.630	0.748	0.748	0.906	0.906
Max. Draw Bar Pull Force	lbs.	3150	3930	4846	7808	9471	9471	12115	12115
Max. Gripping Force	lbs.	6400	8090	12555	19292	24449	24449	31718	31718
Max Speed	rpm	8000	7000	6000	5000	4200	4200	3300	3300
Net Weight	lbs.	8.8	14.7	27.1	48.5	81.1	75.1	122.9	117.0
GD^2	lbs.+ft^2	0.52	1.4	5.2	15.6	29.9	28.9	65.7	64.7
Matching Cylinder		F0933H	F0933H	S1246	S1552	S1875	S1875	S2091	S2091
Matching Soft Top Jaw		BR04	BR05	B006	B008	B010	B010	BR13	BR13
Matching Hard Top Jaw		GT04	GT04	GT06	GT08	GT10	GT10	GT13	GT13

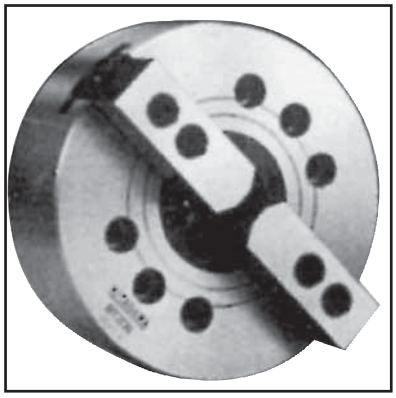

BT200 Series

MODEL	UNIT	BT205	BT206A05	BT208A06	BT210A06	BT210A08	BT212A06	BT212A08
Spindle Nose		4.331	A2-5	A2-6	A2-6	A2-8	A2-6	A2-6
Thru-Hole	in.	1.299	1.772	2.047	2.953	2.953	3.583	3.583
Jaw Stroke (Diameter)	in.	0.213	0.217	0.291	0.346	0.346	0.417	0.417
Plunger Stroke	in.	0.394	0.472	0.630	0.748	0.748	0.906	0.906
Max. Draw Bar Pull Force	lbs.	2625	3258	5053	6401	6401	8242	8242
Max. Gripping Force	lbs.	5383	8535	12577	16621	16621	21562	21562
Max Speed	rpm	7000	6000	5000	4200	4200	3300	3300
Net Weight	lbs.	14.3	26.7	45.4	76.2	70.3	112.1	106.2
GD^2	lbs.+ft^2	1.4	5.1	14.7	28.0	27.0	60.0	59.0
Matching Cylinder		S1036	S1246	S1552	S1875	S1875	S2091	S2091
Matching Soft Top Jaw		BR05	B006	B008	B010	B010	BR13	BR13
Matching Hard Top Jaw		-	-	-	-	-	-	-

U.S. Patent NO 4410192

TECHLEADER® TOOLING INC.

KITAGAWA

B200 & BT200 Series (CONT'D)

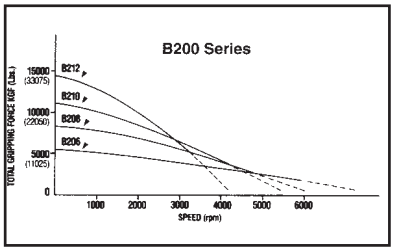

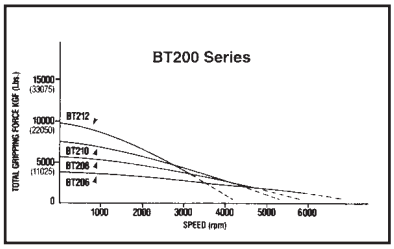

Model B200 and BT200 Series Chucks are manufactured from high grade alloy steel. All sliding surfaces are hardened and ground to assure consistent accuracy and performance.

Lubrication nipple in each base jaw.

Master Jaw Serration:
Chuck size 6" to 12" 1.5 mm x 60º

Mounting:
Direct mounting to fit ASA B5.9 type A
(interchangeable with DIN 55026)

Standard Equipment:
Chuck assembled with adapter, chuck mounting bolts. T-nuts and jaw mounting bolts with wrench, draw nut wrench.

MAKE SURE YOU GREASE YOUR CHUCK WITH CHUCK-EEZ®.
SEE PAGE 5-94

DIMENSIONAL DRAWINGS

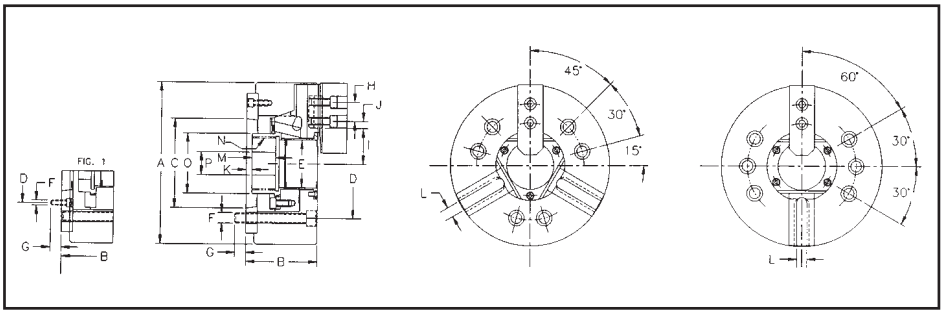

DIMENSIONS (Dimension in inches)

MODEL	B206A05 BT206A05	B208A06 BT208A06	B210A06 BT210A06	B210A08 BT210A08	B212A06 BT212A06	B212A08 BT212A08
A	6.654	8.268	10.000	10.000	11.969	11.969
B	3.583	4.055	4.724	4.449	5.079	4.803
C	3.250	4.188	4.188	5.501	4.188	5.501
D	4.125	5.250	5.250	6.750	5.250	6.750
E	1.772	2.047	2.953	2.953	3.583	3.583
F	6xM10	6xM12	6xM12	6xM16	6xM12	6xM16
G	0.630	0.709	0.728	0.945	0.728	0.984
H	0.787	0.984	1.181	1.181	1.181	1.181
I max.	1.260	1.524	2.008	2.008	2.413	2.413
I min.	1.152	1.378	1.835	1.835	2.205	2.205
J max.	0.896	1.171	1.329	1.329	1.803	1.803
J min.	0.364	0.581	0.561	0.561	0.621	0.621
K max.	1.024	1.240	1.319	1.043	1.299	1.024
K min.	0.551	0.610	0.571	0.295	0.394	0.118
L	0.472	0.551	0.630	0.630	0.827	0.827
M	0.591	0.650	0.787	0.787	0.906	0.906
N max.	M55X2.0	M60X2.0	M85X2.0	M85X2.0	M100X2.0	M100X2.0
O	2.362	2.598	3.701	3.701	4.252	4.252
P	0.787	1.181	1.772	1.772	1.969	1.969

B210A06, B212A06, BT210A06, BT212A06 are referred to in Fig. 1.
Draw nut is supplied without thread.

TECHLEADER® TOOLING INC.

KITAGAWA

Lever Style Power Chucks BL200 Series

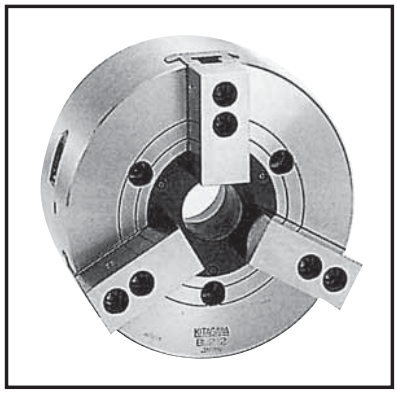

BL200 Series

Three-jaw lever style power chucks are ideal for applications requiring extra long jaw stroke. These deliver consistent accuracy and repetitive chucking.

Special Features:

- Large Thru-Hole
- Extra Long Stroke
- Suitable for Automated Systems
- Compact and Lightweight
- Direct Mount
- High Accuracy and High Endurance

MODEL	UNIT	BL-206	BL-208	BL-210	BL-212
Open Center (Diameter)	in.	1.102	1.772	2.087	2.480
Jaw Stroke (Diameter)	in.	0.787	0.984	1.181	1.378
Plunger Stroke	in.	0.591	0.748	0.866	0.984
Max. Draw Bar Pull Force	lbs.	6314	9218	12034	15554
Max. Gripping Force	lbs.	7040	11000	14080	18040
Max Speed	rpm	4500	3300	3000	2200
Net Weight	lbs.	30.8	55.0	94.6	165.0
GD^2	lbs.+ft^2	3.4	15.8	29.4	73.4
Matching Cylinder		S1246	S1552	S1875	S2091
Matching Hard Top Jaw		GT06	GT08	GT10	GT13
Matching Soft Top Jaw		B006	B008	B010	BR13

(1) With Soft Top Jaw

MAKE SURE YOU GREASE YOUR CHUCK WITH CHUCK-EEZ®.
SEE PAGE 5-94

Gripping Characteristic Graph

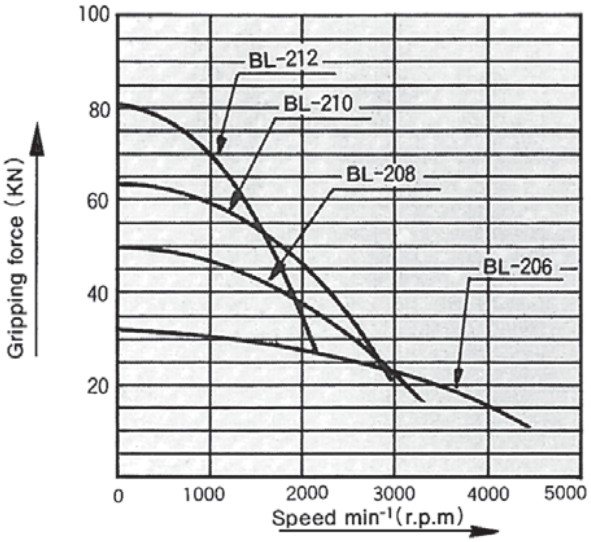

TECHLEADER® TOOLING INC.

KITAGAWA

BL200 Series (CONT'D)

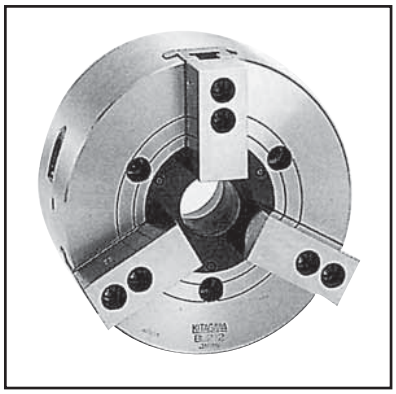

BL200 Series

Model BL200 Series Chucks are manufactured from high grade alloy steel. All sliding surfaces are hardened and ground to assure consistent accuracy and performance.

Lubrication nipple in each base jaw.

Master Jaw Serration:
Chuck size 6" to 12" 1.5 mm x 60º

Mounting:
Direct mounting to fit ASA B5.9 type A
(interchangeable with DIN 55026)

Standard Equipment:
Chuck assembled with adapter, chuck mounting bolts. T-nuts and jaw mounting bolts with wrench, draw nut wrench.

MAKE SURE YOU GREASE YOUR CHUCK WITH CHUCK-EEZ®.
SEE PAGE 5-94

DIMENSIONAL DRAWINGS

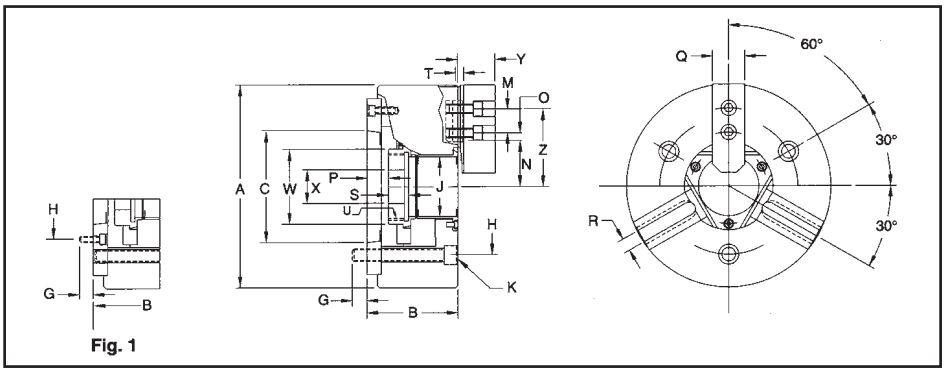

Fig. 1

DIMENSIONS (Dimension in inches)

MODEL	BL-206A05	BL-208A06	BL-210A06*	BL-210A08	BL-212A06*	BL-212A08
A	6.496	8.268	10.000	10.000	11.969	11.969
B	3.819	4.409	5.394	5.118	6.220	5.945
C	3.250	4.188	4.188	5.501	4.188	5.501
G	0.551	0.709	0.728	0.984	0.728	0.984
H	4.126	5.252	5.252	6.748	5.252	6.748
J	1.102	1.772	2.087	2.087	2.480	2.480
K	3-M10	3-M12	3-M16	3-M16	3-M16	3-M16
M	0.787	0.984	1.181	1.181	1.181	1.181
N max.	1.516	2.087	2.461	2.461	2.933	2.933
N min.	1.122	1.594	1.870	1.870	2.244	2.244
O max.	0.660	0.818	1.034	1.034	1.507	1.507
O min.	0.364	0.463	0.443	0.443	0.502	0.502
P max.	0.984	0.787	0.748	0.472	1.307	1.031
P min.	0.394	0.039	-0.118	-.0394	0.3231	0.047
Q	1.024	1.378	1.575	1.575	1.969	1.969
R	0.472	0.551	0.630	0.630	0.827	0.827
S	0.945	1.260	1.575	1.575	1.496	1.496
T	0.079	0.079	0.079	0.079	0.118	0.118
U max.	M38x1.5	M55x2.0	M65x2.0	M65x2.0	M75x2.0	M75x2.0
W	1.772	2.480	2.874	2.874	3.268	3.268
X	0.787	1.181	1.772	1.772	1.969	1.969
Y	1.142	1.535	1.693	1.693	2.047	2.047
Z	2.598	3.740	4.330	4.330	4.370	4.370

* See figure 1

TECHLEADER® TOOLING INC. KITAGAWA

Counter Balanced Power Chucks HOH Series

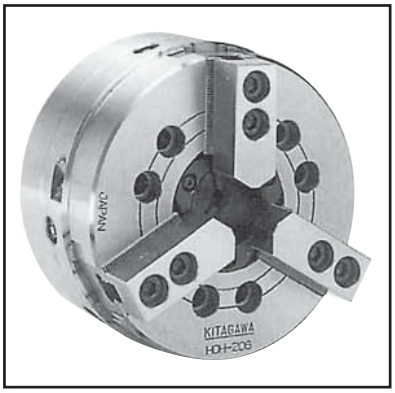

HOH Series

Three-jaw wedge style power chucks are ideal for ultra high speed applications. They provide maximum gripping force at high speeds. Their unique built-in counter balanced mechanism assures stabilized jaw force every time. These deliver consistent accuracy and repetitive chucking. Counter balance allows for lower pressure gripping which is suitable for thin wall materials.

Special Features:

- High Speed
- Large Thru-Hole
- Greater Gripping Forces at High Speeds
- High Accuracy and High Endurance
- Compact and Lightweight
- Direct Mount
- Lower Gripping Force Capability

MAKE SURE YOU GREASE YOUR CHUCK WITH CHUCK-EEZ®.
SEE PAGE 5-94

SPECIFICATIONS

MODEL	UNIT	HOH-206	HOH-208	HOH-10K	HOH-12K	HOH-15K
Spindle Nose (2)		A2-5	A2-6	A2-8	A2-8	A2-11
Open Center (Diameter)	in.	1.772	2.047	2.559	3.071	4.626
Jaw Stroke (Diameter)	in.	0.217	0.291	0.346	0.417	0.417
Plunger Stroke	in.	0.472	0.630	0.748	0.906	0.906
Max. Draw Bar Pull Force	lbs.f	4840	7480	8370	10792	15638
Max. Gripping Force	lbs.f	12540	18480	21806	28414	39647
Max Speed	rpm	7000	6000	4500	3500	2800
Net Weight	lbs.	34.5	66.0	79.5 (1)	133.0 (1)	244.5 (1)
GD^2	lbs.+ft^2	6.27	17.9	30.1	71.2	216.0
Matching Cylinder		S1246	S1552	F1768H	F2078H	F2511H
Matching Hard Top Jaw		GT06	GT08	GT10	GT12	GT15
Matching Soft Top Jaw		B006	B008	B010	B012	B015

(1) Without top jaws.
(2) Other spindle mounts available.

GRIPPING CHARACTERISTIC GRAPHS

HOHK Series

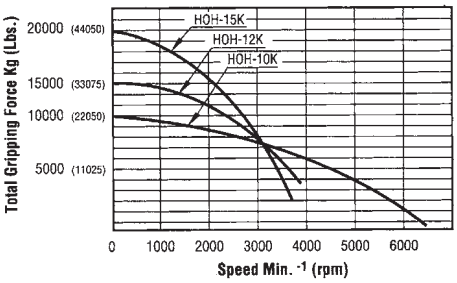

HOH200 Series

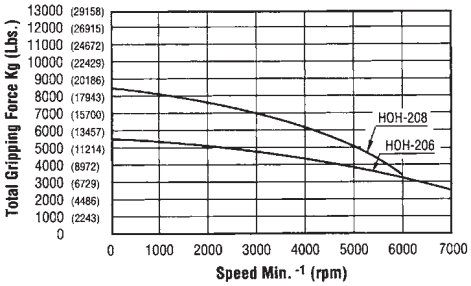

U.S. Patent NO 4410192

TECHLEADER® TOOLING INC.

KITAGAWA

HOH Series (CONT'D)

HOH Series

Uses can vary from those high-speed operations requiring heavy jaw forces for roughing work to those requiring light jaw forces for preventing part distortions. This Counter Balanced Chuck design assures accurate, repetitive chucking.

Model HOH Chucks are ultra high speed three-jaw counter balanced open center power chucks, direct mounted on ASA B5.9 type A spindles.

Model HOH Chucks are manufactured from high grade alloy steel. All sliding surfaces are hardened and ground for accurate actual running and long service repeatability.

Lubrication nipple in each base jaw.

Base Jaw Serration
Chuck size 6' to 15" 1.5 mm X 60º

Mounting:
Direct mounting to fit ASA B5.9 type A (interchangeable with DIN 55026) DIN 55021, 55022 and 55027 mounting are available on request.

Standard Equipment:
Chuck assembled with adapter, chuck mounting bolts. T-nuts and jaw mounting bolts with wrench, draw nut wrench.

MAKE SURE YOU GREASE YOUR CHUCK WITH CHUCK-EEZ®.
SEE PAGE 5-94

DIMENSIONAL DRAWINGS

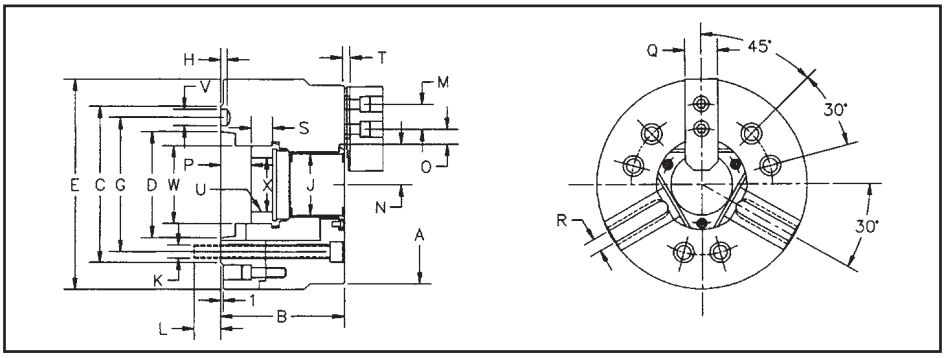

SOFT TOP JAW DIMENSIONS (Dimension in inches)

MODEL	HOH-206	HOH-208	HOH-10K	HOH-12K	HOH-15K	MODEL	HOH-206	HOH-208	HOH-10K	HOH-12K	HOH-15K
A	6.654	8.268	10.000	11.969	15.000	O max.	0.945	1.181	1.329	1.919	1.841
B	3.740	4.331	4.488	4.921	6.063	O min.	0.295	0.413	0.443	0.443	0.541
C	5.315	6.496	8.268	8.268	11.024	P max.	1.181	1.398	0.551	1.142	1.496
D	3.2503	4.1881	5.5009	5.5005	7.7505	P min.	0.709	0.768	-0.197	0.236	0.591
E	6.890	8.858	10.000	11.969	15.000	Q	1.024	1.378	1.575	1.969	2.441
G	4.125	5.250	6.750	6.750	9.252	R (H8)	0.472	0.551	0.630	0.709	0.866
H	0.256	0.256	0.315	0.315	0.394	S	0.591	0.787	1.181	1.299	1.299
J	1.772	2.047	2.559	3.071	4.626	T	0.197	0.197	0.197	0.197	0.197
K	M10	M12	M16	M16	M20	U max.	M55x2.0	M60x2.0	M75x2.0	M88x2.0	M130x2.0
L	0.669	0.630	0.945	0.906	1.181	V $\left(^{+0.004}_{-0}\right)$	0.641	0.766	0.953	0.953	1.156
M	0.787	0.984	1.181	1.181	1.693	W	2.362	2.598	3.327	3.780	5.472
N max.	1.260	1.524	1.969	2.283	3.228	X	0.787	1.181	1.772	1.969	2.362
N min.	1.152	1.378	1.795	2.075	3.020						

TECHLEADER® TOOLING INC. KITAGAWA

Closed Center Power Chucks N Series

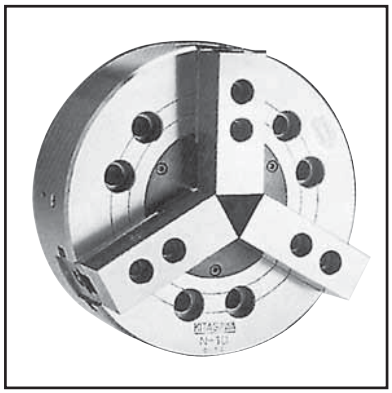

N Series

Three-jaw wedge style power chucks with closed center. Cost effective solutions for high speed chucking and universal machining where no thru-hole is required. These deliver consistent accuracy and repetitive chucking.

Special Features:

- High Speed
- Strong Clamping Force
- Interchangeable Top Tooling
- High Accuracy and High Endurance
- Compact and Lightweight
- Direct Mount

SPECIFICATIONS

MODEL	UNIT	N-06A05	N-08A06	N-10A06	N-10A08	N-12A06	N-12A08	N-15A08	N-15A11	N-18A08	N-18A11	N-21A08	N-21A11	N-21A15	N-24A11	N-24A15
Spindle Nose		A2-5	A2-6	A2-6	A2-8	A2-6	A2-8	A2-8	A2-11	A2-8	A2-11	A2-8	A2-11	A2-15	A2-11	A2-15
Jaw Stroke (Diameter)	in.	0.335	0.346	0.346	0.346	0.413	0.413	0.630	0.630	0.630	0.630	0.630	0.630	0.630	0.630	0.630
Plunger Stroke	in.	0.787	0.827	0.984	0.984	1.181	1.181	1.378	1.378	1.378	1.378	1.378	1.378	1.378	1.378	1.378
Max. Draw Bar Pull Force	lbs.	4037	5608	6505	6505	9198	9198	18396	18396	18396	18396	18396	18396	18396	18396	18396
Max. Gripping Force	lbs.	11777	16826	24229	24229	34995	34995	55860	55860	55860	55860	61244	61244	61244	61244	61244
Max Speed	rpm	5270	4760	4010	4010	3380	3380	3040	3040	2710	2710	1940	1940	1940	1760	1760
Net Weight (1)	lbs.	30.8	59.4	88.0	88.0	147.4	145.2	231.0	226.6	294.8	288.2	442.2	435.6	418.0	530.2	514.8
GD^2	lbs.+ft^2	4.0	11.8	26.8	26.2	60.8	60.2	156.0	150.0	198.0	194.0	414.0	410.0	398.0	590.2	564.0
Matching Cylinder		Y1020R	Y1225R	Y1225R	Y1225R	Y1530R	Y1530R	Y2035R	Y2035R	Y2035R	Y2035R	Y2035R	Y2035R	Y2035R	Y2035R	Y2035R
Matching Hard Top Jaw		GT06	GT08	GT10	GT10	GT12	GT12	HB15N1	HB15N1	HB15N1	HB15N1	HB18B2	HB18B2	HB18B2	HB18B2	HB18B2
Matching Soft Top Jaw		B006	B008	B010	B010	B012	B012	BR15	BR15	BR15	BR15	B018	B018	B018	B018	B018

(1) Without soft top jaws.

GRIPPING CHARACTERISTIC GRAPHS

MAKE SURE YOU GREASE YOUR CHUCK WITH CHUCK-EEZ®.
SEE PAGE 5-94

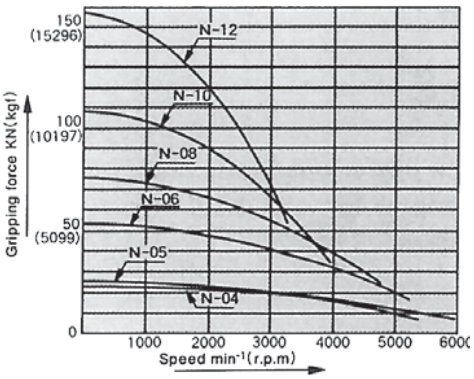

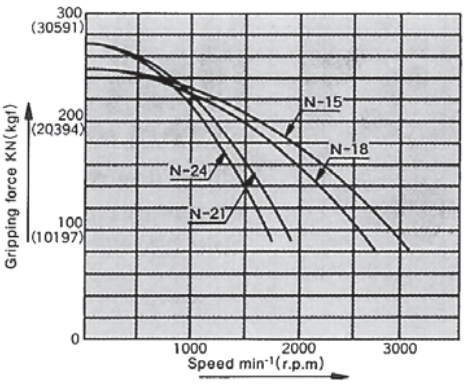

TECHLEADER® TOOLING INC.

KITAGAWA

N Series (CONT'D)

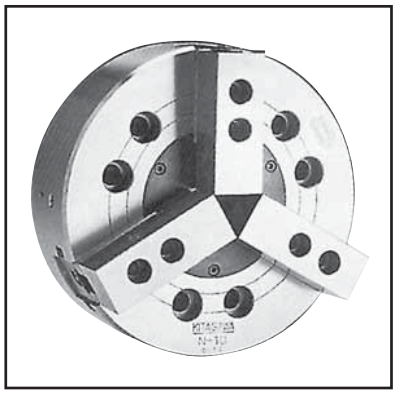

N Series

Model N Series Chucks are manufactured from high grade alloy steel. All sliding surfaces are hardened and ground to assure consistent accuracy and performance.

Lubrication nipple in each base jaw.

Master Jaw Serration
Chuck size 6' to 18" 1.5 mm X 60º Chuck size 21' to 24" 3 mm X 60º

Mounting:
Direct mounting to fit ASA B5.9 type A (interchangeable with DIN 55026)

Standard Equipment:
Chuck assembled with adapter, chuck mounting bolts. T-nuts and jaw mounting bolts with wrench, draw nut wrench.

MAKE SURE YOU GREASE YOUR CHUCK WITH CHUCK-EEZ®.
SEE PAGE 5-94

DIMENSIONAL DRAWINGS

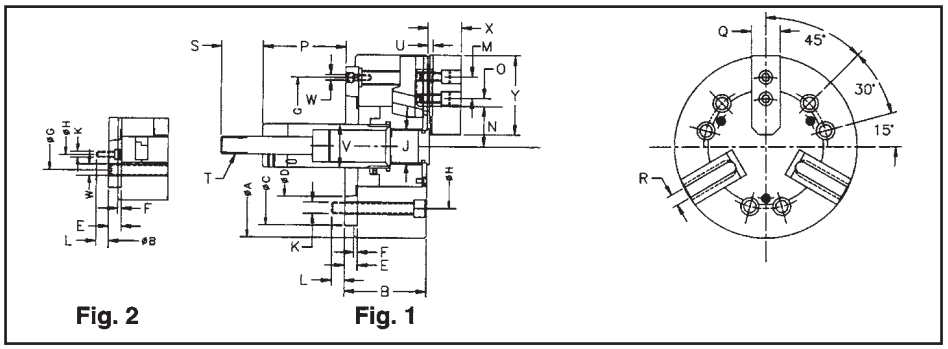

Fig. 2 Fig. 1

DIMENSIONS (Dimension in inches)

MODEL	N-06A05	N-08A06	N-10A06	N-10A08	N-12A06	N-12A08	N-15A08	N-15A11	N-18A08	N-18A11	N-21A08	N-21A11	N-21A15	N-24A11	N-24A15
A	6.496	8.268	10.000	10.000	11.969	11.969	15.000	15.000	17.717	17.717	20.866	20.866	20.866	24.016	24.016
B	3.307	3.819	4.094	4.016	4.724	4.646	5.118	5.118	5.118	5.118	5.748	5.748	5.748	5.748	5.748
C (H6)	5.512	6.693	8.661	8.661	8.661	8.661	11.811	11.811	11.811	11.811	14.961	14.961	14.961	14.961	14.961
D	3.251	4.188	4.188	5.501	4.188	5.501	5.501	7.751	5.501	7.751	5.501	7.751	11.251	7.751	11.251
E	0.591	0.669	0.787	0.709	0.787	0.709	0.866	0.866	0.866	0.866	1.063	1.063	1.063	1.063	1.063
F	0.197	0.197	0.197	0.197	0.236	0.236	0.236	0.236	0.236	0.236	0.236	0.236	0.236	0.236	0.236
G	4.567	5.906	6.748	7.480	6.748	7.480	9.252	10.236	9.252	10.236	13.000	13.000	13.000	13.000	13.000
H	4.126	5.252	5.252	6.748	5.252	6.748	6.748	9.252	6.748	9.252	6.748	9.252	13.000	9.252	13.000
J	0.827	0.984	1.339	1.339	1.339	1.339	–	–	–	–	–	–	–	–	–
K	6-M10	6-M12	6-M12	6-M16	6-M12	6-M16	6-M16	6-M20	6-M16	6-M20	6-M16	6-M20	6-M22	6-M20	6-M22
L	0.551	0.709	0.709	0.984	0.709	0.984	0.906	1.299	0.906	1.299	0.906	1.102	1.339	1.102	1.339
M	0.787	0.984	1.181	1.181	1.181	1.181	1.693	1.693	1.693	1.693	2.362	2.362	2.362	2.362	2.362
N max.	1.488	1.823	2.012	2.012	2.402	2.402	3.051	3.051	4.252	4.252	3.386	3.386	3.386	4.921	4.921
N min.	1.319	1.650	1.839	1.839	2.195	2.195	2.736	2.736	3.937	3.937	3.071	3.071	3.071	4.606	4.606
O max.	0.148	0.877	1.212	1.212	1.921	1.921	1.921	1.921	1.921	1.921	3.684	3.684	3.684	3.684	3.684
O min.	0.305	0.463	0.443	0.443	0.502	0.502	0.916	0.916	0.916	0.916	1.084	1.084	1.084	1.084	1.084
P max.	3.406	4.331	4.488	5.512	4.685	5.709	3.228	3.228	2.756	2.756	2.756	2.756	2.756	2.756	2.756
P min.	2.618	3.504	3.504	4.528	3.504	4.528	1.850	1.850	1.378	1.378	1.378	1.378	1.378	1.378	1.378
Q	1.220	1.378	1.575	1.575	1.969	1.969	1.969	1.969	1.969	1.969	2.559	2.559	2.559	2.559	2.559
R	0.472	0.551	0.630	0.630	0.709	0.709	1.004	1.004	1.004	1.004	0.984	0.984	0.984	0.984	0.984
S	1.417	1.417	1.417	1.417	1.417	1.417	2.165	2.165	2.165	2.165	2.165	2.165	2.165	2.165	2.165
T	M16x2.0	M20x2.5	M20x2.5	M20x2.5	M20x2.5	M20x2.5	M30x3.5	M30x3.5	M30x3.5	M30x3.5	M30x3.5	M30x3.5	M30x3.5	M30x3.5	M30x3.5
U	0.157	0.197	0.197	0.197	0.197	0.197	0.079	0.079	0.079	0.079	0.118	0.118	0.118	0.118	0.118
V	1.339	1.496	1.772	1.772	1.969	1.969	2.362	2.362	2.362	2.362	2.362	2.362	2.362	2.362	2.362
W	3-M6	3-M6	6-M16	3-M8	6-M16	3-M8	6-M20	3-M10	6-M20	3-M10	6-M22	6-M22	3-M12	6-M22	6-M12
X	1.378	1.654	1.811	1.811	2.126	2.126	2.402	2.402	2.402	2.402	2.795	2.795	2.795	2.795	2.795
Y	2.835	3.740	4.331	4.331	5.079	5.079	5.315	5.315	5.315	5.315	7.087	7.087	7.087	7.087	7.087
Fig.	1	1	2	1	2	1	2	1	1	2	1	1	2	1	2

TECHLEADER® TOOLING INC. KITAGAWA

Closed Center, Long Stroke Chucks, NL/NLT Series

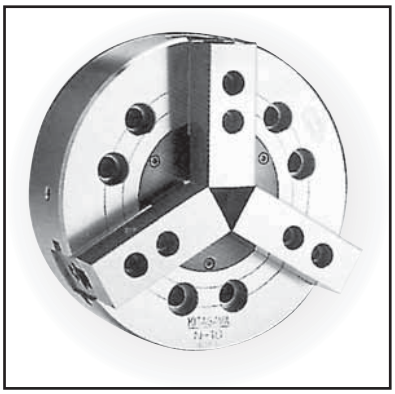

NL Series

Wedge style power chucks with closed center and long stroke.. Cost effective solutions for high speed chucking and universal machining where long stroke and no thru-hole is required. These deliver consistent accuracy and repetitive chucking.

Special Features:

- Long Stroke
- Strong Clamping Force
- Interchangeable Top Tooling
- High Speed
- High Accuracy and High Endurance
- Compact and Lightweight
- Direct Mount

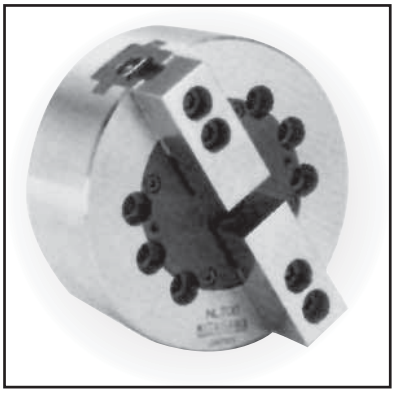

NLT Series

SPECIFICATIONS

MODEL	UNIT	NL/NLT-06A05	NL/NLT-08A06	NL/NLT-10A06	NL/NLT-10A08	NL/NLT-12A06	NL/NLT-12A08
Spindle Nose (2)		A2-5	A2-6	A2-6	A2-8	A2-6	A2-8
Jaw Stroke (Diameter)	in.	0.512	0.638	0.713	0.713	0.764	0.764
Plunger Stroke	in.	0.787	0.984	1.102	1.102	1.181	1.181
Max. Draw Bar Pull Force	lbs.f	3139	4486	5982	5982	8076	8076
Max. Gripping Force	lbs.f	5832	8972	12115	12115	16601	16601
Max Speed	rpm	4300	3600	3100	3100	2500	2500
Net Weight (1)	lbs.	27.5	52.8	79.5	78.9	135.0	134.1
GD^2	lbs.+ft^2	3.4	10.6	23.6	23.4	57.2	56.6
Matching Cylinder		Y1020R	Y1225R	Y1530R	Y1530R	Y1530R	Y1530R
Matching Hard Top Jaw		GT06	GT08	GT10	GT10	GT12	GT12
Matching Soft Top Jaw		B006	B008	B010	B010	B012	B012

(1) Without soft top jaws.

GRIPPING CHARACTERISTIC GRAPHS

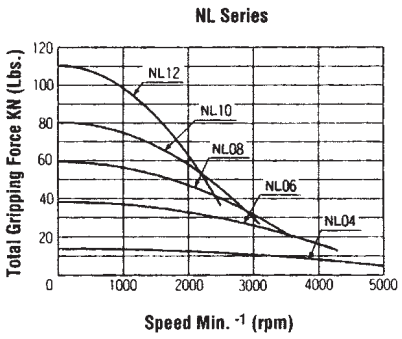

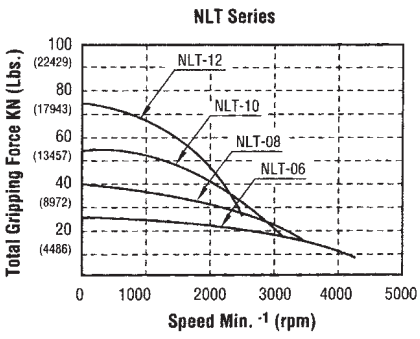

MAKE SURE YOU GREASE YOUR CHUCK WITH CHUCK-EEZ®.

SEE PAGE 5-94

TECHLEADER® TOOLING INC.

KITAGAWA

NL/NLT Series (CONT'D)

Model NL/NLT Series Chucks are manufactured from high grade alloy steel. All sliding surfaces are hardened and ground for accurate actual running and long service repeatability.

Lubrication nipple in each base jaw.

Master Jaw Serration
Chuck size 6' to 12" 1.5 mm X 60º

Mounting:
Direct mounting to fit ASA B5.9 type A (interchangeable with DIN 55026)

Standard Equipment:
Chuck assembled with adapter, chuck mounting bolts. T-nuts and jaw mounting bolts with wrench, draw nut wrench.

DIMENSIONAL DRAWINGS

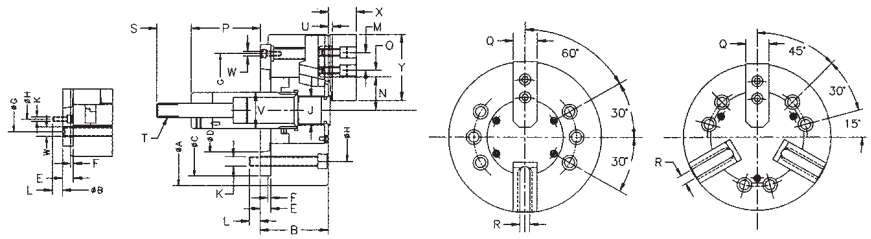

Fig. 2 | Fig. 1 | 2 Jaw | 3 Jaw

DIMENSIONS (Dimension in inches)

MODEL	NL/NLT-06A05	NL/NLT-08A06	NL/NLT-10A06	NL/NLT-10A08	NL/NLT-12A06	NL/NLT-12A08
A	6.496	8.268	10.000	10.000	11.969	11.969
B	3.307	3.346	3.504	3.504	4.173	4.173
C (H6)	5.512	6.693	8.661	8.661	8.661	8.661
D	3.251	4.188	4.188	5.501	4.188	5.501
E	0.591	0.669	0.787	0.709	0.787	0.709
F	0.197	0.197	0.197	0.197	0.236	0.236
G	4.567	5.906	6.748	7.480	6.748	7.480
H	4.126	5.252	6.748	6.748	6.748	6.748
K	6-M10	6-M12	6-M16	6-M16	6-M16	6-M16
L	0.551	0.787	0.709	0.709	0.709	0.709
M	0.787	0.984	1.181	1.181	1.181	1.181
N max.	1.594	1.894	2.142	2.142	2.587	2.587
N min.	1.339	1.575	1.785	1.785	2.205	2.205
O max.	0.542	0.827	1.162	1.162	1.684	1.684
O min.	0.364	0.473	0.453	0.453	0.502	0.502
P max.	3.405	4.488	5.551	5.630	5.630	5.709
P min.	2.618	3.504	4.449	4.528	4.449	4.528
Q	1.220	1.378	1.575	1.575	1.969	1.969
R	0.472	0.551	0.630	0.630	0.630	0.630
S	1.417	1.417	1.417	1.417	1.417	1.417
T	M16x2.0	M20x2.5	M20x2.5	M20x2.5	M20x2.5	M20x2.5
U	0.157	0.197	0.197	0.197	0.197	0.197
V	1.339	1.496	1.772	1.772	1.969	1.969
W	1.378	1.654	1.811	1.811	2.126	2.126
X	1.378	1.654	1.811	1.811	2.126	2.126
Y	2.835	3.740	4.331	4.331	5.079	5.079
Fig.	1	1	2	1	2	1

MAKE SURE YOU GREASE YOUR CHUCK WITH CHUCK-EEZ®.
SEE PAGE 5-94

TECHLEADER® TOOLING INC.

KITAGAWA

Quick Jaw-Change Chucks QB300 Series

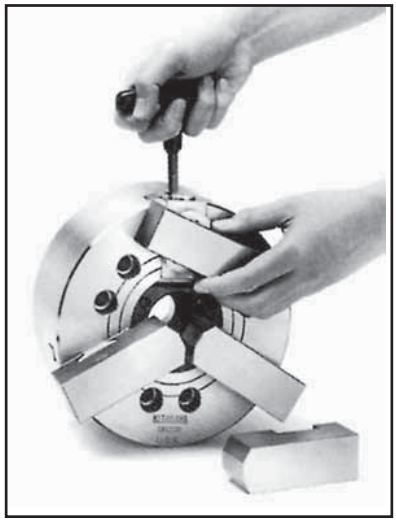

QB300 Series

Three-jaw wedge style power chucks slash downtime and maximize productivity through unique quick change locking mechanism. Jaws can be changed in as little as 30 seconds while delivering consistent 0.0012” accuracy! QB300 Series Quick Jaw-Change chucks do not require long strike cylinders and are fully interchangeable with most power chucks.

Special Features:

- Large Thru-Hole
- 30 Second Jaw-Change
- High Accuracy and High Endurance
- Compact and Lightweight
- Direct Replacement for Most Power Chucks
- High Speed
- Expensive Base Jaws NOT Required
- Long Stroke Cylinder NOT Required

MAKE SURE YOU GREASE YOUR CHUCK WITH CHUCK-EEZ®.
SEE PAGE 5-94

SPECIFICATIONS

MODEL	UNIT	QB306	QB308	QB310	QB312	QB315
Jaw Stroke (Diameter)	in.	0.217	0.291	0.346	0.417	0417
Plunger Stroke	in.	0.472	0.630	0.748	0.906	0.906
Max. Draw Bar Pull Force	lbs.	4941	7637	9659	12352	15928
Max. Gripping Force	lbs.	12802	18866	24932	32343	40381
Max. Gripping Force at Max Speed	lbs.	4267	6289	8311	11013	13460
Max Speed	rpm	5500	4500	4000	3000	2300
Net Weight	lbs.	27.8	51.1	77.1	123.2	264.0
GD^2	lbs.+ft^{-2}	5.5	16.4	30.1	70.7	–
Matching Cylinder		S1246	S1552	S1875	S2091	F2511H
Min. Gripping O.D.	in.	0.394	0.591	0.866	0.866	–
Max. Gripping O.D.	in.	5.512	7.087	8.268	9.843	–
Gripping Accuracy	in.	0.0012	0.0012	0.0012	0.0012	0.0012
Jaw Change Time (3 Jaws)	sec.	30	30	30	30	30

GRIPPING CHARACTERISTIC GRAPH

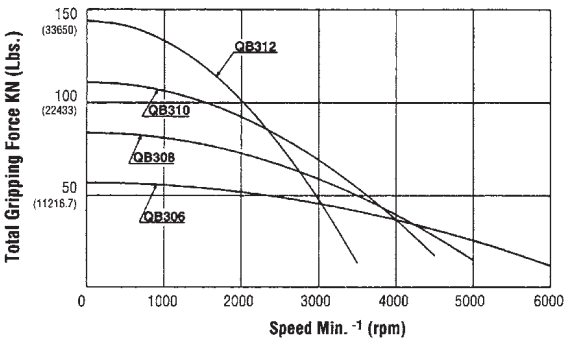

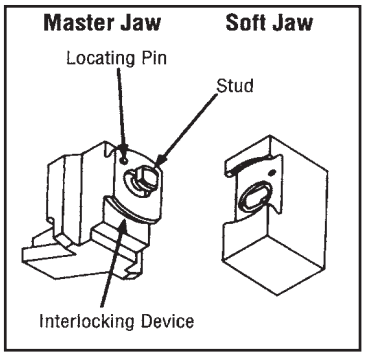

Kitagawa’s unique circular lock design assures positive alignment, engagement and peak accuracy.

TECHLEADER® TOOLING INC.

KITAGAWA

QB300 Series (CONT'D)

Model QB300 Series Chucks are manufactured from high grade alloy steel. All sliding surfaces are hardened and ground to assure consistent accuracy and performance.

Lubrication nipple in each base jaw.

Mounting:
Direct mounting to fit ASA B5.9 type A
(interchangeable with DIN 55026)

Standard Equipment:
Chuck assembled with adapter, chuck mounting bolts, wrench, draw nut wrench.

DIMENSIONAL DRAWINGS

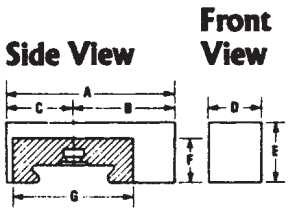

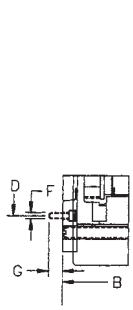

Fig. 1

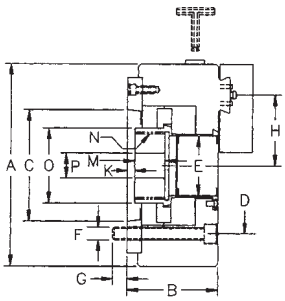

Fig. 2 Side View

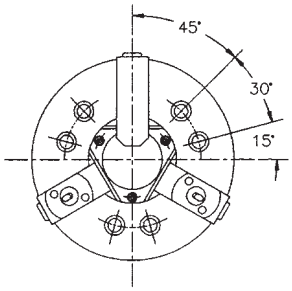

Front View

MAKE SURE YOU GREASE YOUR CHUCK WITH CHUCK-EEZ®.
SEE PAGE 5-94

QUICK JAW-CHANGE CHUCK DIMENSIONS (Dimension in inches)

MODEL	QB306A500	QB308A600	QB310A600	QB310A800	QB312A600	QB312A800	QB315
A	6.654	8.268	10.000	10.000	11.969	11.969	15.00
B	3.583	4.055	4.724	4.449	5.079	4.803	5.236
C	3.250	4.188	4.188	5.501	4.188	5.501	–
D	4.125	5.250	5.250	6.750	5.250	6.750	9.252
E	1.772	2.047	2.953	2.953	3.583	3.583	4.626
F	6xM10	6xM12	6xM12	6xM16	6xM12	6xM16	6xM20
G	0.630	0.709	0.728	0.945	0.728	0.984	–
H max.	2.303	2.835	3.465	3.465	4.185	4.185	5.354
H min.	2.195	2.689	3.291	3.291	3.976	3.976	5.146
K max.	1.024	1.240	1.319	1.043	1.299	1.024	0.433
K min.	0.551	0.610	0.571	0.295	0.394	0.118	-0.472
M	0.591	0.650	0.787	0.787	0.906	0.906	1.299
N max.	M55x2.0	M60x2.0	M85x2.0	M85x2.0	M100x2.0	M100x2.0	M130x2.0
O	2.362	2.598	3.701	3.701	4.252	4.252	5.472
P	0.787	1.181	1.772	1.772	1.969	1.969	2.362

QB310A06 and QB312A06 are referred to in Fig. 1. Draw nut is supplied without thread.

SOFT TOP JAW DIMENSIONS (Dimension in inches)

MODEL	6" SB06BB	6" SB06BB-40	8" SB08BB	8" SB08BB-56	10" SB10BB	10" SB108BB-60	12" SB12BB	12" SB12BB-70
A	3.543	3.543	4.173	4.173	4.921	4.921	5.472	5.472
B	2.126	2.126	2.520	2.520	2.992	2.992	3.543	3.543
C	1.417	1.417	1.654	1.654	1.929	1.929	1.929	1.929
D	1.260	1.260	1.457	1.457	1.654	1.694	1.969	1.969
E	1.181	1.575	1.496	2.205	1.654	2.362	1.969	2.756
F	0.945	0.945	1.102	1.102	1.220	1.220	1.339	1.339
G	2.677	2.677	2.992	2.992	3.465	3.465	3.622	3.622
Min Gripping OD	0.394	0.394	0.591	0.591	0.866	0.866	1.181	1.181

TECHLEADER® TOOLING INC.

KITAGAWA

FH & FHP Series Hydraulic Cylinders

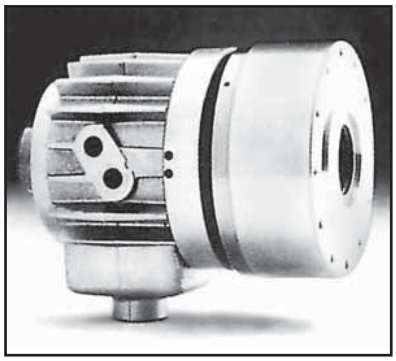

FH Series

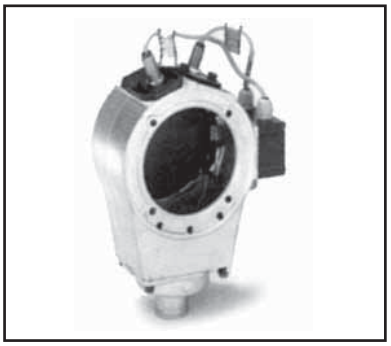

Coolant Collector

Designed to meet the demands of today's high speed CNC bar and chucking lathes. They feature precision finished piston bores and cool running rotary unions for years of trouble-free performance.

Special Features:

- High Speed
- Long Piston Stroke
- Efficient Cooling at High Speeds
- Built-in Check Valves and Pressure Relief Valves
- Long Life and High Endurance

SPECIFICATIONS

MODEL	UNIT	F0933H**	F1236H**	F1546H**	F1768H**	F2078H**	F2511H	F2511HP
Bore	in.	1.299	1.417	1.811	2.677	3.071	4.626	4.626
Piston Stroke	in.	0.472	0.472	0.630	0.748	0.906	0.906	1.969
Piston Area-Pull Side	in.^{2}	8.25	15.97	24.09	28.47	36.50	52.20	52.20
Piston Area-Pull Side	in.^{2}	8.522	16.01	24.91	28.55	37.77	54.00	54.00
Max. Draw Bar Pull-Side	lbs.	4935	8150	12115	14317	18502	26432	26432
Max. Draw Bar Push-Side	lbs.	4620	8150	12555	14317	19163	27533	27533
Max. Operation Pressure	psi	570	570	570	570	570	570	570
Max. Speed	rpm	8000	6700	6000	4500	3500	2800	2800
GD^2	lbs.•ft.^{2}	0.8	2.1	5.5	10.0	14.5	42.2	45.0
Net Weight	lbs	18.7	28.6	48.5	74.9	96.9	132.2	138.8
Oil Leakage*	gal/min.	0.7	0.8	1.0	1.0	1.0	2.0	2.0

* The oil leakage rate is reached if the cylinder is used at an operating pressure of 427 psi at oil temperature of 122º F.
** Items out of production.

TECHLEADER® TOOLING INC.

KITAGAWA

FH & FHP Series (CONT'D)

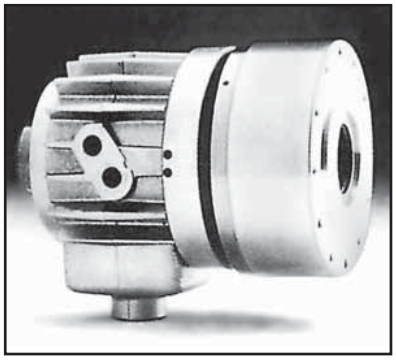

FH Series

FH & FHP SERIES HYDRAULIC CYLINDERS

FH & FHP SERIES COOLANT COLLECTORS

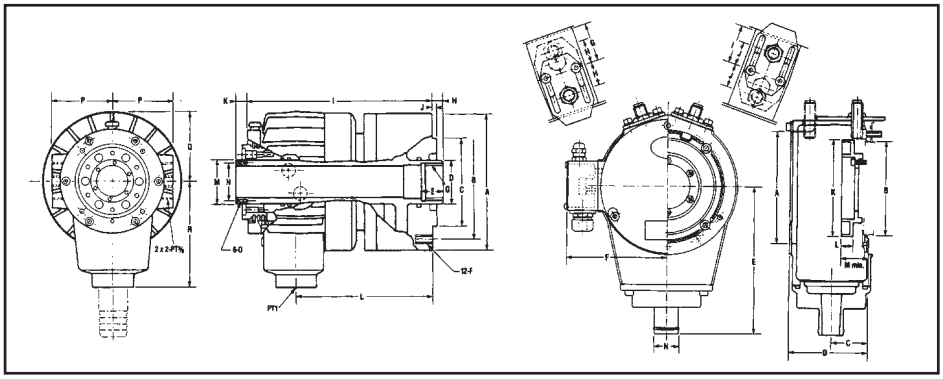

HYDRAULIC CYLINDERS DIMENSIONS (Dimensions in inches)

MODEL	F0933H**	F1236H**	F1546H**	F1768H**	F2078H**	F2511H	F2511HP
A	4.921	6.102	7.480	8.465	9.449	12.205	12.205
B	3.937	5.118	6.693	7.480	8.465	10.827	10.827
C	3.150	3.937	5.118	6.299	7.087	9.055	9.055
D	1.772	1.969	2.559	3.346	3.937	5.512	5.512
E	0.984	0.984	1.181	1.181	1.378	1.772	1.772
F	M8	M10	M10	M10	M12	M16	M16
G	M38x1.5	M42x1.5	M55x2.0	M75x2.0	M90x2.0	M130x2.0	M130x2.0
H max.	0.472	0.472	0.630	0.945	0.906	0.945	1.811
H min.	Ø	0	0	0.197	0	0.039	-0.157
I	7.480	8.346	9.843	10.866	11.654	12.205	13.268
J	0.197	0.197	0.197	0.197	0.197	0.236	0.236
K max.	1.614	0.984	1.142	1.142	1.496	1.496	2.559
K min.	1.142	0.512	0.512	0.394	0.591	0.591	0.591
L	5.591	6.181	7.126	7.697	8.228	8.543	9.606
M	M39x1.5	1.953	2.346	3.331	3.724	5.299	5.299
N	–	1.693	2.087	3.031	3.425	5.000	5.000
O	–	M4	M4	M5	M5	M5	M5
P	2.520	2.717	3.071	3.937	4.232	4.921	4.921
Q	–	3.150	3.586	4.331	4.626	5.335	5.335
R	4.331	4.724	5.118	6.496	7.283	8.465	8.465

** Items out of production.

COOLANT COLLECTORS DIMENSIONS (Dimensions in inches)

MODEL	CS-F09BN	CS-F12BN	CS-F15BN	CS-F17BN	CS-20HW	CS-25HW
A	3.819	3.819	4.488	6.063	6.535	7.874
B	2.874	3.346	3.780	4.764	5.472	7.047
C	1.535	1.535	1.535	1.575	1.969	1.969
D	3.150	3.228	3.228	3.386	4.000	4.000
E	5.512	5.512	5.906	7.480	8.465	9.252
F	3.622	3.622	4.016	4.921	5.098	5.827
G	1.535	1.535	1.535	1.693	2.323	2.638
H	0.445	0.945	0.945	1.102	1.024	0.709
I	1.535	1.535	1.535	1.693	1.693	1.693
J	0.945	0.945	0.945	1.102	1.024	1.024
K	3.307	3.307	3.898	5.669	6.043	7.559
L	0.472	0.472	0.472	0.472	0.472	0.472
M min.	1.142	1.181	1.181	1.181	1.378	1.378
N	–	1.024	1.024	1.024	1.024	1.024
CYL	F0933H	F1236H	F1546H	F1768H	F2078H	F2511H(P)

Standard Coolant (without proximity switch) are also available.

SPECIFICATION OF PROXIMITY SWITCHES

Power Supply	DC12-24V
Switching Capacity	200mA
Output Form	NPN

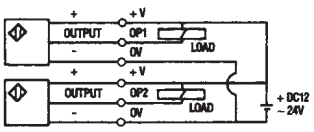

TECHLEADER® TOOLING INC.

KITAGAWA

S & SL Series Hydraulic Cylinders

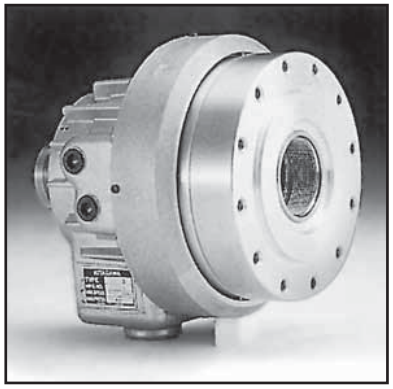

S Series

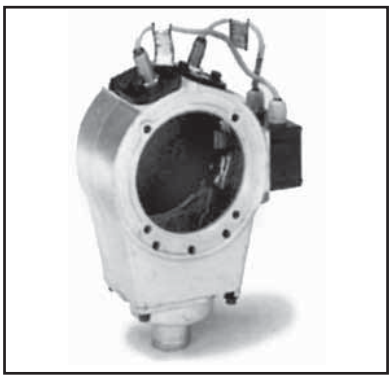

Coolant Collector

Compact and lightweight, they feature up to 20% larger bar capacity and speed than conventional cylinders. Precision finished piston bores and cool running rotary unions are included for years of trouble-free performance.

Special Features:

- Extra Large Bore
- High Speed
- Long Piston Stroke
- Efficient Cooling at High Speeds
- Built-in Check Valves and Pressure Relief Valves
- Long Life and High Endurance

SPECIFICATIONS

MODEL	UNIT	S1246	S1552	S1875	S2091	S2816	S1246L	S1552L	S1875L	S2091L	S2816L
Bore	in.	1.811	2.047	2.953	3.583	6.496	1.811	2.047	2.953	3.583	6.496
Piston Stroke	in.	0.591	0.866	0.984	1.181	1.181	1.260	1.339	1.575	1.96	2.008
Piston Area-Pull Side	in.^{2}	13.87	23.27	28.44	36.41	51.46	13.87	23.27	28.44	36.41	51.46
Piston Area-Pull Side	in.^{2}	15.59	25.00	30.63	38.97	58.34	15.59	25.00	30.63	38.97	58.34
Max. Draw Bar Pull-Side	lbs.	7048	12115	14758	18943	20414	7048	12115	14758	18943	20414
Max. Draw Bar Push-Side	lbs.	8150	12996	15859	20264	23107	8150	12996	15859	20264	23107
Max. Operation Pressure	psi	570	570	570	570	435	570	570	570	570	435
Max. Speed	rpm	7000	6200	4700	3800	1700	7000	6200	4700	3800	1700
GD^2	lbs.•ft.^{2}	1.8	5.0	9.0	14.5	68.7	2.1	5.5	9.5	14.7	68.7
Net Weight	lbs	26.4	37.0	57.3	72.7	20.7	28.2	37.4	59.0	73.6	22.2
Oil Leakage*	gal/min.	0.8	1.0	1.1	1.2	1.7	0.8	1.0	1.1	1.2	1.7

* This oil leakage rate is reached if the cylinder is used at an operating pressure of 427 psi at oil temperature of 122° F.

TECHLEADER® TOOLING INC.

KITAGAWA

S & SL Series (CONT'D)

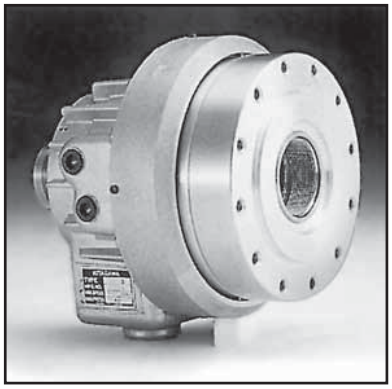

S Series

S & SL SERIES HYDRAULIC CYLINDERS

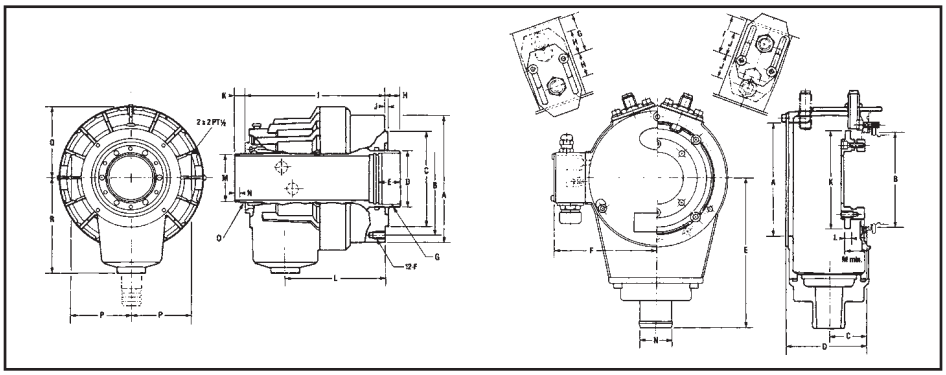

S & SL SERIES COOLANT COLLECTORS

HYDRAULIC CYLINDERS DIMENSIONS (Dimensions in inches)

MODEL	S1246	S1552	S1875	S2091	S2816	S1246L	S1552L	S1875L	S2091L	S2816L
A	6.102	7.480	8.465	9.449	12.795	6.102	7.480	8.465	9.449	12.795
B	5.118	6.693	7.480	8.465	11.417	5.118	6.693	7.480	8.465	11.417
C	3.937	5.118	6.299	7.087	10.236	3.937	5.118	6.299	7.087	10.236
D	2.559	2.756	3.740	4.331	7.480	2.559	2.756	3.740	4.331	7.480
E	1.181	1.181	1.378	1.378	1.772	1.181	1.181	1.378	1.378	1.772
F	M10	M10	M10	M12	M16	M10	M10	M10	M12	M16
G	M55x2.0	M60x2.0	M85x2.0	M100x2.0	M180x3.0	M55x2.0	M60x2.0	M85x2.0	M100x2.0	M180x3.0
H max.	0.591	0.866	0.984	1.378	1.181	1.063	1.142	1.378	1.771	2.008
H min.	0	0	0	0	0	-0.197	-0.197	-0.197	-0.197	0
I	7.047	7.520	8.858	9.764	12.913	7.874	8.189	9.488	10.551	14.567
J	0.197	0.197	0.197	0.197	0.197	0.197	0.197	0.197	0.197	0.197
K max.	1.575	1.850	1.969	2.165	2.165	2.244	2.323	2.559	2.953	2.442
K min.	0.984	0.984	0.984	0.984	0.984	0.984	0.984	0.984	0.984	0.484
L	5.315	5.709	6.555	7.205	9.252	6.142	6.378	7.185	7.992	10.906
M	1.969	2.205	3.189	3.780	6.496	1.969	2.205	3.189	3.780	6.496
N	0.354	0.354	0.354	0.354	0.354	0.354	0.354	0.354	0.354	0.354
O	M52x1.5	M58x1.5	M84x2.0	M99x2.0	M173x3.0	M52x1.5	M58x1.5	M84x2.0	M99x2.0	M173x3.0
P	2.992	3.386	3.976	4.331	6.378	2.992	3.386	3.976	4.331	6.378
Q	3.937	4.331	4.764	5.256	5.551	3.937	4.331	4.764	5.256	5.551
R	4.528	5.118	6.299	7.283	9.843	4.528	5.118	6.299	7.283	9.843

COOLANT COLLECTORS DIMENSIONS (Dimensions in inches)

MODEL	CS-S12BN	CS-S15BN	CS-S18BN	CS-S20BN	CS-S28BN
A	3.819	4.488	6.063	6.063	9.843
B	3.346	3.780	4.764	5.433	–
C	1.535	1.535	1.575	2.283	2.047
D	3.228	3.228	3.386	4.016	4.044
E	5.512	5.906	7.480	7.480	11.220
F	3.622	4.016	4.921	4.921	–
G	1.535	1.535	1.693	2.047	2.343
H	0.945	0.945	1.102	1.181	1.437
I	1.535	1.535	1.693	2.047	2.343
J	0.945	0.945	1.102	1.181	1.437
K	3.307	3.898	5.669	5.669	9.528
L	0.197	0.197	0.197	0.197	0.276
M min.	0.906	0.906	0.906	1.181	–
N	1.299	1.299	1.299	1.299	1.102
CYL	S1246	S1552	S1875	S2091	S2516
	S1246L	S1552L	S1875L	S2091L	S2816L

Standard Coolant (without proximity switch) are also available.

SPECIFICATION OF PROXIMITY SWITCHES

Power Supply	DC12-24V
Switching Capacity	200mA
Output Form	NPN

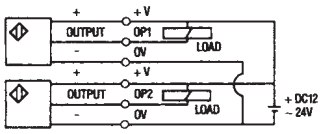

TECHLEADER® TOOLING INC. KITAGAWA

YR & YRE Series Hydraulic Cylinders

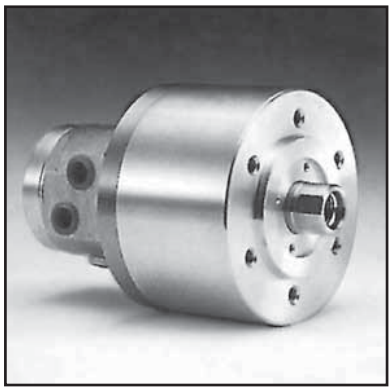

YR Series

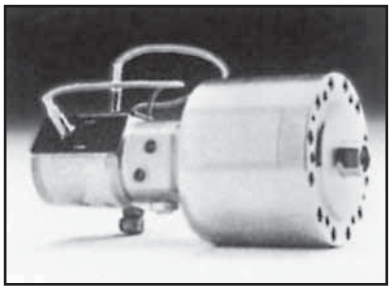

YRE Series

Closed center hydraulic cylinders feature high speed and long stroke option for use with all closed center chucks with speeds up to 6000 RPM.

Special Features:

- Safety check valves to ensure safety in the event of hydraulic failure
- Safety pressure relief valve to prevent damage to cylinders in the event of over pressure
- High speed, compact and lightweight
- Maintenance free design

SPECIFICATIONS

MODEL	UNIT	Y1020R(E)	Y1225R(E)	Y1530R(E)	Y2035R(E)
Piston Stroke	in.	0.787	0.984	1.181	1.378
Piston Area-Pull Side	in.^{2}	12.3	17.5	24.8	45.0
Piston Area-Pull Side	in.^{2}	13.3 (13.0)	18.9 (18.6)	27.3 (27.0)	48.7 (48.4)
Max. Draw Bar Pull Force	lbs.	6505	9423	13460	24229
Max. Operation Pressure	psi	570	570	570	570
Oil Leakage Rate*	gal/min.	0.2	0.2	0.2	0.2
Max. Speed	rpm	6000	6000	5500	5500
Net Weight	lbs	16 (17)	22 (23)	30 (31)	49 (50)
GD^2	lbs.•ft.^{2}	1.2	2.1	4.5	9.2

(E) Designated stroke detection option using detector plates and proximity switches.

* Oil leakage rate is based on operating pressure of 435 psi at oil temperature of 122° F.

TECHLEADER® TOOLING INC.

KITAGAWA

YR & YRE Series (CONT'D)

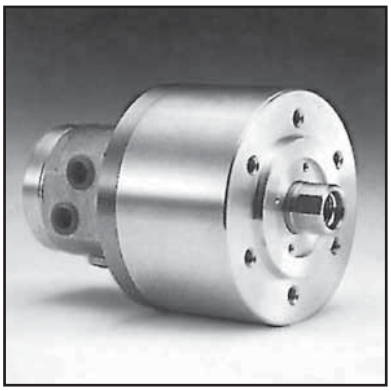

YR Series

YR DIMENSIONAL DRAWING

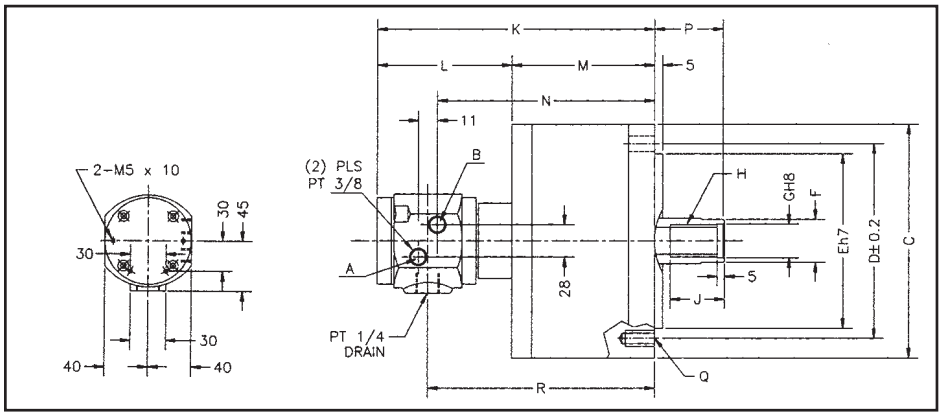

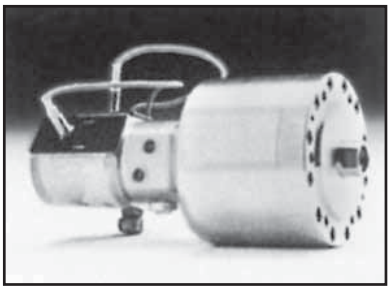

YRE Series

YRE DIMENSIONAL DRAWING

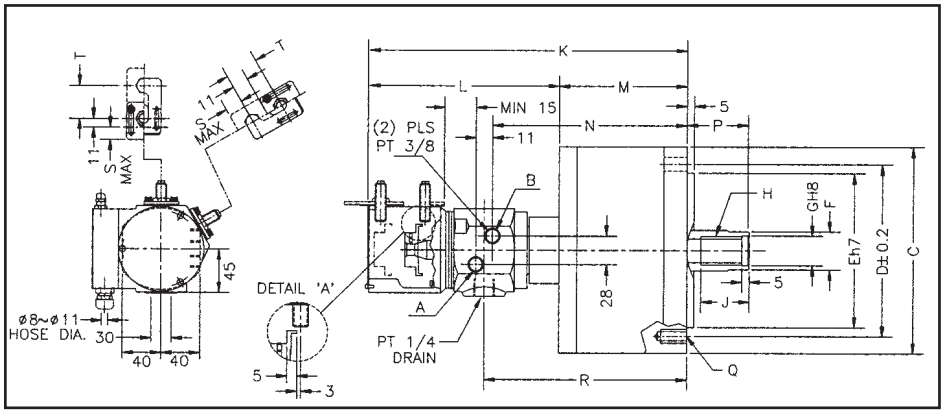

DIMENSIONS (Dimensions in Inches)

MODEL	Y1020R(E)	Y1225R(E)	Y1530R(E)	Y2035R(E)
A (Piston Diameter)	4.134	4.921	5.906	7.874
B (Stroke)	0.787	0.984	1.181	1.378
C	5.315	6.299	7.480	9.646
D	3.937	5.118	5.118	5.709
E	3.150	4.331	4.331	4.724
F	1.181	1.378	1.772	2.165
G	0.827	0.984	1.220	1.457
H	M20	M24	M30	M36
J	1.378	1.732	1.772	2.362
K	7.756 (9.921)	8.071 (10.236)	8.425 (10.591)	8.976 (11.339)
L	4.252(6.417)	4.252 (6.417)	4.252 (6.417)	4.173 (6.535)
M	3.504	3.819	4.173	4.803
N	5.984	6.299	6.654	7.205
P max.	1.772	2.008	2.205	2.717
P min.	0.984	1.024	1.024	1.339
Q min.	6-M10x20	6-M12x24	12-M12x24	12-M16x30
R	6.220	6.535	6.890	7.441
S	(0.906)	(0.906)	(0.906)	(1.102)
T	(1.614)	(1.614)	(1.614)	(1.811)

TECHLEADER® TOOLING INC.

KITAGAWA

Chuck Adapters

Chuck Adapter Plates ASA B5.9 TYPE A

(Interchangeable DIN 55026)

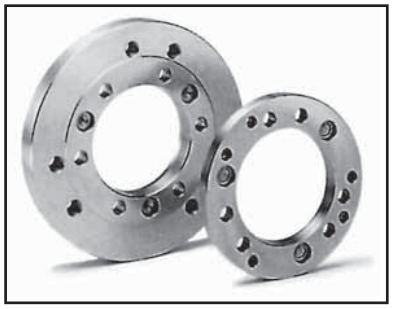

Chuck Adapter Series

DIMENSIONAL DRAWINGS

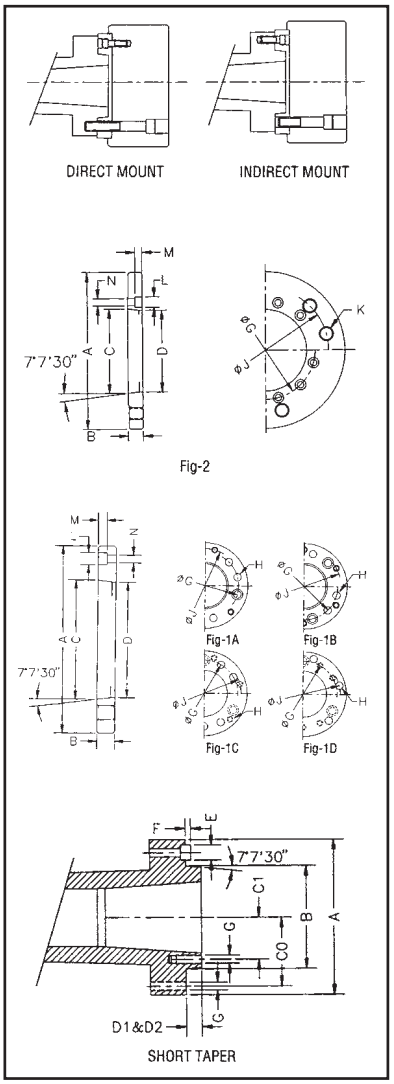

SPINDLES

MODEL	NOSE	5	6	8	11	15
N	6	CB-06A05				
	8	CN-08A05	CB-08A06			
	10		CN-10A06	CB-10A08		
	12		CN-10A06	CB-10A08		
NLT	6	CBT06A05				
	8	CNT08A05	CBT08A06			
	10		CBT10A06	CBT10A08		
	12		CBT10A06	CBT10A08		
B	6	CB-06A05				
	8	CB-08A05	CB-08A06			
	10		CB-10A06	CB-10A08		
	12		CB-10A06	CB-10A08		
	15			CB-15A08	CB-15A11	
	18			CB-18A08	CB-18A11	
	21				CB-21A11	CB-21A15
	24				CB-21A11	CB-21A15
BT	6	CBT06A06				
	8	CBT08A05	CBT08A06			
	10		CBT10A06	CBT10A08		
	12		CBT10A06	CBT10A08		
	15			CBT15A08	CBT15A11	
B-200 BL-200	6	CB-06A05				
	8	CB-08A05	CB-08A06			
	10		CB-10A06	CB-10A08		
	12		CB-10A06	CB-10A08		
BT-200	6	CBT06A05				
	8	CBT08A05	CBT08A06			
	10		CBT10A06	CBT10A08		
	12		CBT10A06	CBT10A08		

DIMENSIONS (Dimensions in Inches)

MODEL	CB06A05	CB08A05	CB08A06	CB10A06	CB10A08	CB15A08	CB15A11	CB18A08	CB18A11	CB21A11	CB21A15	CN10A06
SPINDLE NOSE	A2-5	A2-5	A2-6	A2-6	A2-8	A2-8	A2-11	A2-8	A2-11	A2-11	A2-15	A2-6
A	5.512	6.693	6.693	8.661	8.661	11.811	11.811	14.961	14.961	14.961	14.961	7.874
B	0.591	0.866	0.669	0.984	0.709	1.299	0.866	1.299	0.866	1.614	1.063	0.787
C	3.250	3.250	4.188	4.188	5.501	5.501	7.751	5.501	7.751	7.751	11.25	4.188
D	3.138	3.138	4.055	4.055	5.354	5.512	7.563	5.512	7.563	7.563	9.921	4.055
E	0.641	0.641	0.766	0.766	0.953	0.953	1.156	0.953	1.156	1.156	1.406	0.766
F	0.256	0.256	0.256	0.256	0.315	0.315	0.394	0.315	0.394	0.394	0.394	0.256
G	4.125	4.125	5.250	5.250	6.750	6.750	9.252	6.750	9.252	9.252	13.000	5.250
H	0.472	0.433	0.531	0.531	0.669	0.669	0.827	0.669	0.827	0.827	0.945	0.531
J	4.567	5.250	5.906	6.750	7.480	9.252	10.236	9.252	12.598	13.000	13.000	6.750
K	–	M12	–	M16	–	M20	–	M20	–	M22	–	M16
L	0.433	0.669	0.433	0.787	0.551	0.984	0.669	0.984	0.669	1.260	0.787	0.787
M	0.276	0.433	0.276	0.531	0.394	0.669	0.433	0.669	0.433	0.827	0.591	0.315
N	0.260	–	0.260	–	0.354	–	0.433	–	0.433	–	0.531	–
Fig.	1A	2	1B	2	1C	2	1C	2	1C	2	1D	2

For ASA 58.9 Type A (Interchangeable DIN 55026)) Spindles

SHORT TAPER SPINDLE NOSE STANDARDS (Standards in Inches)

SPINDLE NOSE SIZE NO		A2-5	A2-6	A2-8	A2-11	A2-15
Outside Diameter	A	5.236	6.496	8.268	11.024	14.961
Max. Taper Diameter	B	3.251	4.188	5.501	7.751	11.251
P.C.R. Outer Bolts	C0	2.063	2.626	3.374	4.626	6.500
P.C.R. Inner Bolts A1 Only)	C1	1.219	1.626	2.187	3.250	4.874
Spigot Height (A1 Only)	D1	0.563	0.625	0.687	0.750	0.813
Spigot Height (A2 Only)	D2	0.512	0.551	0.630	0.709	0.748
Driving Stud Diamter	E	0.626	0.750	0.937	1.126	1.374
Driving Stud Height	F	0.197	0.197	0.236	0.315	0.315
Bolt Hole Size	G	M10	M12	M16	M18	M22

Type A1 and A2 ASA B5.9 Type A, DIN 55026, ISO B702 Part 1, BS 4442 Part1.

TYPICAL CHUCK

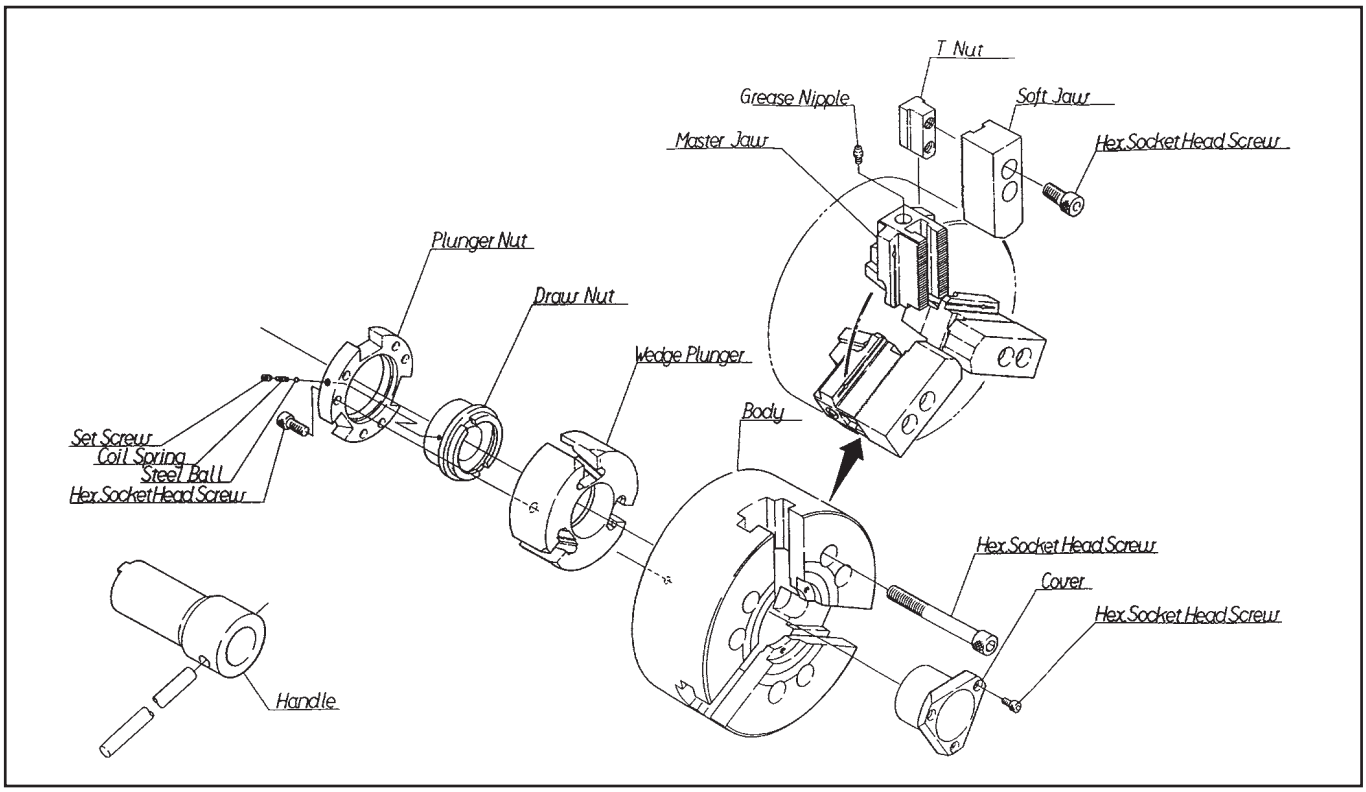

TYPICAL CYLINDER

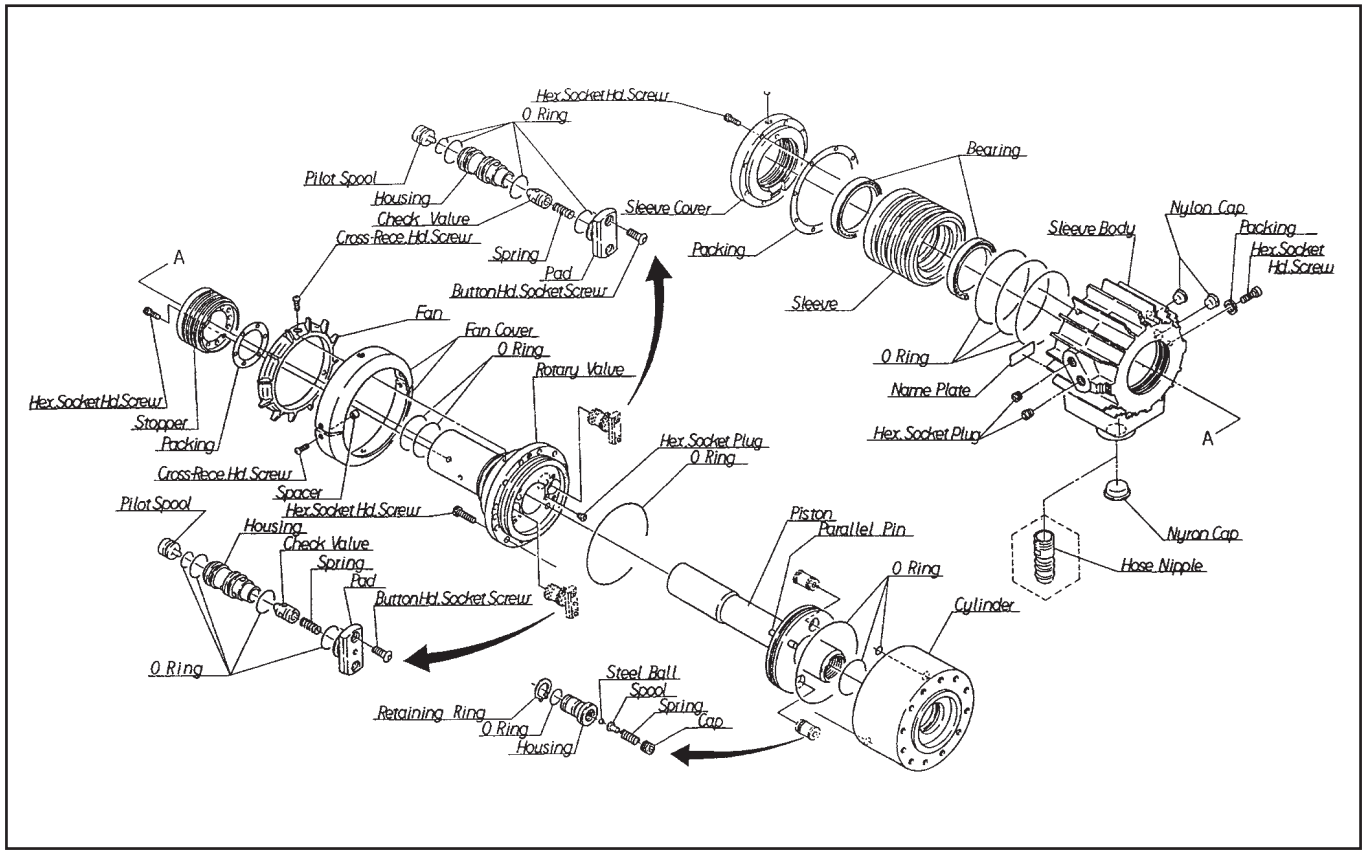

TECHLEADER® TOOLING INC.

CHUCK-EEZ®
Power Chuck Lubricant

Double to Triple Clamping pressure keeps work piece clamped in place.

- Provides boundary lubrication protection.
- Lowers friction and wear.
- Assists in wear-in of new chucks
- Lowers Maintenance costs
- High resistance to centrifuge force.

CHUCK-EEZ® is a heavy duty boundary lubricant designed to increase the clamping pressure of power chucks. CHUCK-EEZ® is formulated with a high percentage of molybdenum disulfide to reduce seizing, galling, fretting wear and lower friction under conditions of extreme pressure. Rust and oxidation inhibitors are incorporated to maximize complete rust protection during the life of the lubricant. CHUCK-EEZ® can be used on power chucks, standard chucks, fasteners, press fits and wear-in guides and ways.

Typical Specifications

Colour	Moly Gray
Base Oil Viscosity: SUS @ 100º F SUS @ 210º F	 580 ±5 60 ±2
Dropping Point	380 ±10
Flash Point	450ºF minimum
Pour Point	0ºF minimum
Base Grease	80% ±0.5
Libricationg Solids	25% ±0.2
Penetration, 1/10 mm	300 ±10

Order Code	Container Size
CHUCK-EEZ2	4 oz. Cartridges
CHUCK-EEZ	16 oz. Cartridges

TECHLEADER® TOOLING INC.

KITAGAWA

Power Collet Chucks

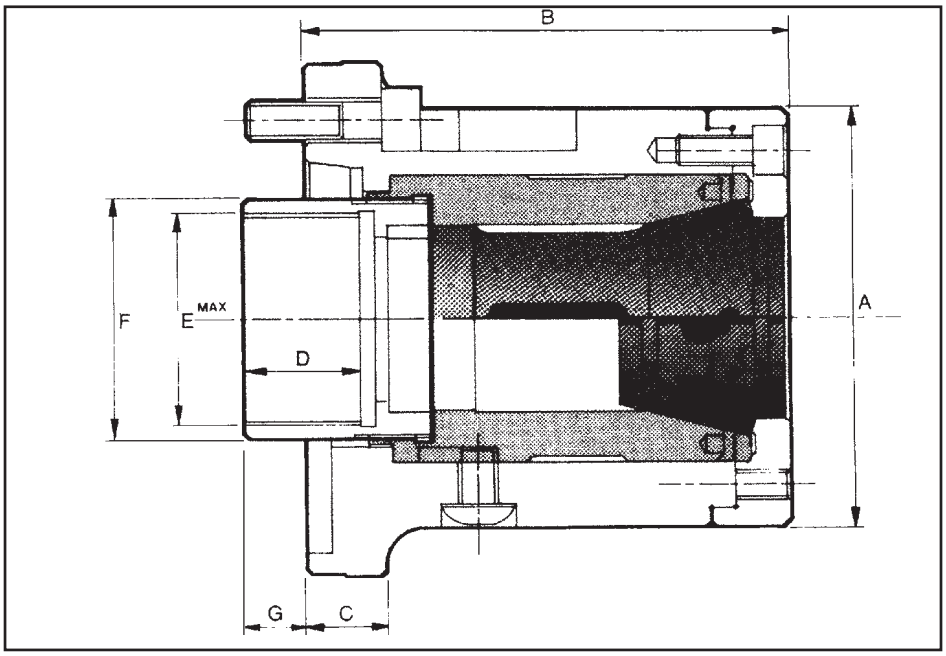

CRL Series

Kitagawa Collet Chucks for highest production from bar stock

Uses both multibore and spring collets to DIN 6343 specification

- Dead length for all second operation applications
- Compact design - minimum overhang
- Interchangeable on spindle with KITAGAWA Series B200 power chucks
- High concentric accuracy
- Supplied complete with blank connector for threading to suit drawtube
- All parts made of alloy steel hardened and precision ground

Kitagawa Collet Chucks - CR Series Standard Range and Dimensions

	ORDER NO.									
Ref. No.	CRS36	CRL42	CRL42A5	CRL42A6	CRL54A6	CRL60	CRL60A6	CRL60A8	CRS66	CRS66A8
Mount	125 x 5 Recess	140 x 5 Recess	A2-5	A2-6	A2-6	170 x 5 Recess	A2-6	A2-8	220 x 5 Recess	A2-8
A	105	110	110	110	138	138	138	138	150	150
B	107	133	143	145	166	148	160	156	140	140
C	23	20	20	30	27	24	27	37	30	30
D	18	30	30	30	25	30	30	30	30	30
E max	M50-x-1.5	M55-x-1.5	M55-x-1.5	M55-x-1.5	M70-x-1.5	M70-x-1.5	M70-x-1.5	M70-x-1.5	M80-x-1.5	M80-x-1.5
F	62	62	62	62	80	80	80	80	90	90
G max	11	11	1	-1	-2	10	-2	2	-9	-15
G min	4	4	-6	-8	-9	3	-9	-5	-19	-25

Capacities

Chuck Ref	Multibore Collet				Spring Collet			
	Catalogue No.	Capacity			Catalogue No.	Capacity		
		Round	Hexagon	Square		Round	Hexagon	Square
CRS36	M671 DIN6343	34	28	24	171E 8742	36	30	25
CRL42	M-673 DIN6343	42	36	29	173E 4728	42	36	30
CRL54	V-120	54	51	41	N853	54	51	41
CRL60	M-677 DIN6343	60	52	42	185E 4291	60	52	42
CRS66	T-285	66	57	44				

TECHLEADER® TOOLING INC.

Power Collet Chucks with Quick Change Nuts

Accuracy: Exceptional accuracy and repeatability

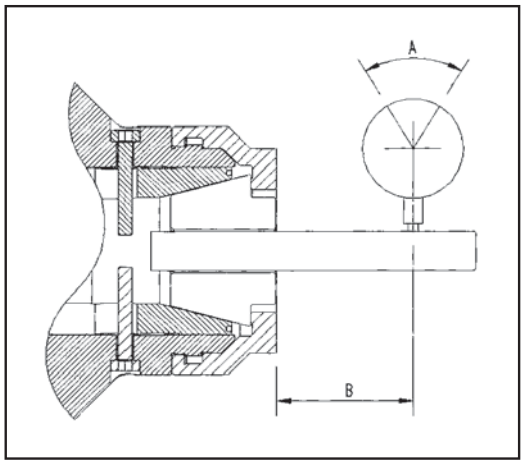

Ø or ACROSS FLATS	A ROUND	A HEX/SQUARE	B - Test LENGTH
3.0-6.0mm	0.020mm	0.060mm	16.0mm
6.0-10mm	0.020mm	0.060mm	25.0mm
10-19mm	0.030mm	0.091mm	40.0mm
19-25mm	0.030mm	0.091mm	50.0mm
25-32mm	0.040mm	0.120mm	55.0mm
32-50mm	0.040mm	0.120mm	75.0mm
over 51mm	0.040mm	0.120mm	100.0mm

Profitability & Features

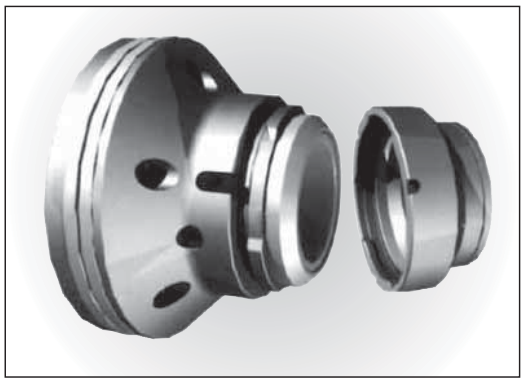

- Proven quick change bayonet cap design.
- Additional thumb activated safety button. Cap is always secured.
- Interchangeable with all standard chucks including Kitagawa, Rohm, SMW Autoblock etc.
- Chuck sleeve has collet orientation slot.
- Common back body design.
- Popular models have reduction sleeves to reduce collet inventory.
- Bar seal cap fitted to eliminate swarf ingress.

Applications and Benefits

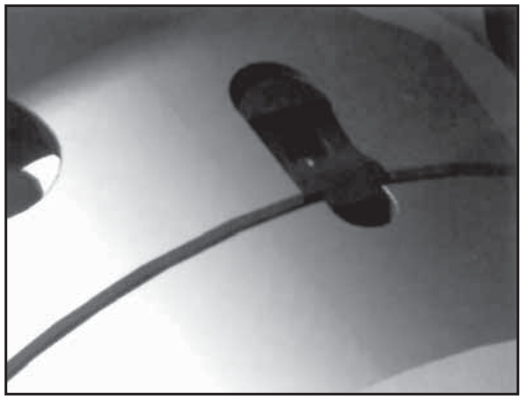

- Quick change mechanism allows rapid work piece change over.
- Safety button promotes safer working environment.
- No new drawtubes or connection problems with these chucks.
- C Axis orientation without additional expense.
- Chuck type easily interchanged using common back bodies.
- New Cap and Sleeve options allows one chuck to fit 8 collet types.

TECHLEADER® TOOLING INC.

Power Collet Chucks with Quick Change Nut

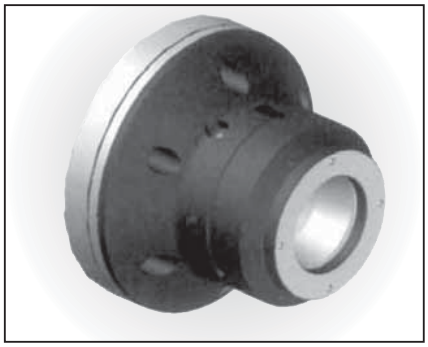

Quick Change Series Power Collet Chucks

- Quick change chuck design for first or second operation.
- Ideally suited for use with barfeeders.
- Fixed Length collet – no part movement.
- Quick Change cap with safety lock.
- Uses Multibore, spring and master collets.
- Exceptional accuracy in small package.

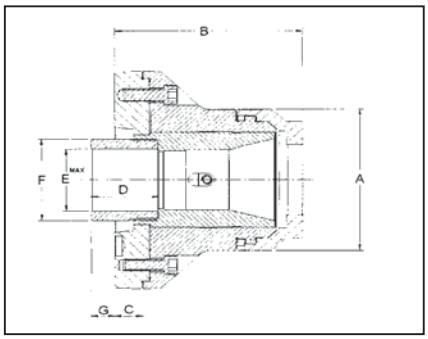

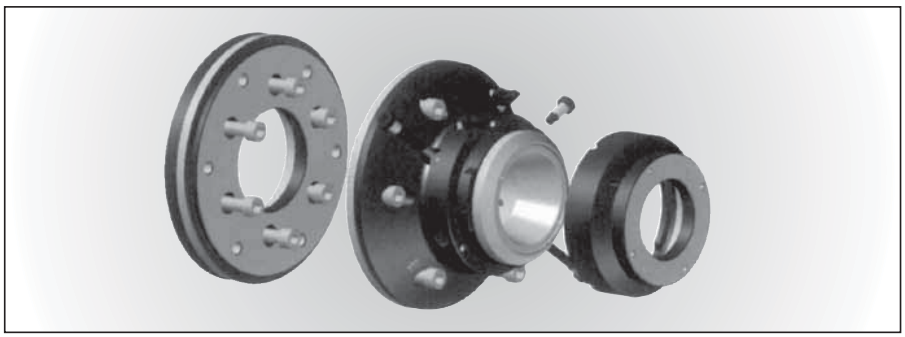

SPECIFICATIONS		QCRL42(1)		QCRL54	QCRL60	QCRS66	QCRL80
		Inch	Din	Inch	Din	Inch	Inch
Gripping Range	Max.	42mm	42mm	54mm	60mm	66mm	80mm
Round	Min.	1.6mm	4mm	1.6mm	4mm	1.6mm	12mm
Collet Increment	mm	3mm	2mm	3mm	2mm	3mm	3mm
Sleeve Stroke	mm	7		7	7	10	11
Max Drawbar Pull	KN	22		34	34	39	44
Max Gripping Force	KN	49		60	60	68	78
Max Speed	rpm	7100		6300	6300	4500	4000
Net Weight	kg	8.4		14.2	14.3	21	34
Matching Cylinder		S1246		S1552	S1875	S1875	S2091
Collet Ref	Multibore	W-850	M-673	V120	M-677	T-285	N-175
	Spring	M-286	173E	N-853	185E	-	L-196

DIMENSIONS	QCRL42(1)			QCRL54			QCRL60			QCRS66			QCRL80		
Mount	140	A5	A6	170	220	A6	170	A6	A8	220	A6	A8	220	A6	A8
A	113			143			143			162			205		
B	137			169.5			165			145	170	145	230	255	230
C	20			25			25			na	25	na	na	25	na
D	60			60			60			60			60		
E Max	M55 x 1.5			M75 x 1.5			M75 x 1.5			M90 x 2			M90 x 2		
F	65			82			82			100			100		
G Max	23			21			21			5	-20	5	20	-5	20
G Min	16			14			14			-5	-30	-5	10	-15	10

TECHLEADER® TOOLING INC.

Spindle Information

CONTACT DETAILS			
Contact Name:		Position:	
Company Name:			
Address:			
Postal Code/ZIP:		Telephone:	
Country:		Fax:	
Website:	www.	Email:	

Drawtube Connector/Machine Spindle Information					
Machine Make:		Chuck Make:		Cylinder Make:	
Model:		Model:		Model:	
Year:		Serial Number:		Serial Number:	

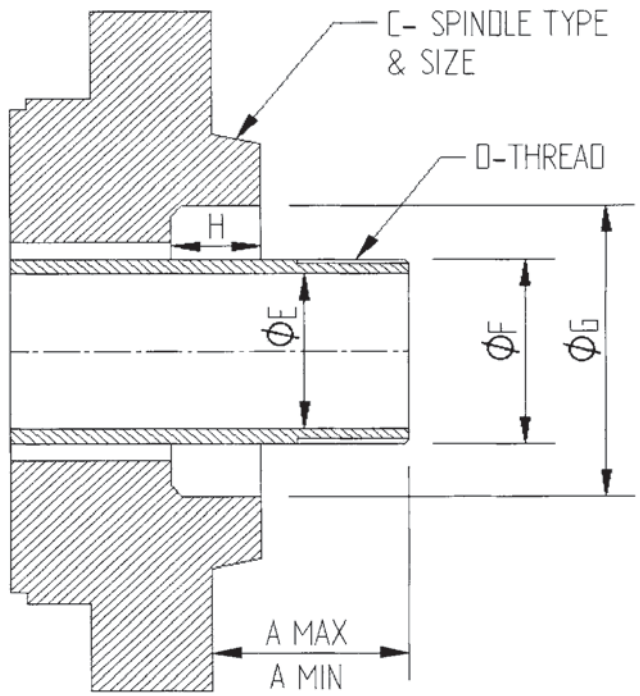

A. Max
(Drawtube Forward Position) _____

A. Min..
(Drawtube Rear Position) _____

C. (Spindle Type & Size)
ie. A2-5, 140 x 2mm etc. _____

D-Drawtube
Thread Diameter _____

Drawtube Pitch _____

Internal or External _____

Thread Length _____

E-Drawtube ID _____

F-Drawtube OD _____

G-Counterbore / Taper ID _____

H- Counterbore / Taper Length _____

(Please enter all dimensions in mm)

Specifications and Dimensions subject to change without notice

FOR CANADA FAX OR EMAIL	FOR USA FAX OR EMAIL
MACHINERY CANADA A DIVISION OF TURRET LATHE SERVICES LIMITED 963 Martin Grove Rd., Rexdale, ON M9W 4V6, Canada Phone: 416-244-5361 • 1-800-268-1484 Fax: 416-241-2396 E-mail: tools@machinerycanada.com Web: www.machinerycanada.com	TECHLEADER® TOOLING INC. DIV. OF TURRET LATHE SERVICES LTD.. 3606 CALIFORNIA ROAD, PO BOX 957, Orchard Park NY PHONE: 716-662-6818 • 1-800-688-6810 FAX: 716-662-8965 EMAIL: tools@techleader.com • WEB: www.techleader.com

TECHLEADER® TOOLING INC.

Super Thin Chucks

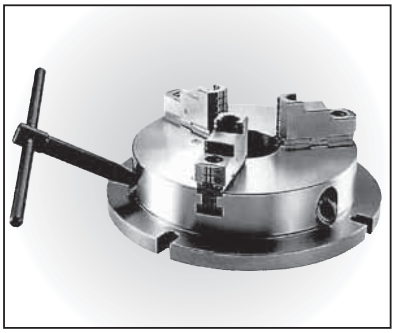

- The angle between “HANDLE” and “BASE OF CHUCK” is 30 degree, therefore, it is much more convenient for “HANDLE” rotation.
- This “POWER SUPER THIN” design of chuck may increase the “allowable length” of machining operation.
- The flanged type design make it easily for leading and unloading operation.
- “POWERFUL TYPE” design, may be used with hard iaws or soft iaws alternatively.

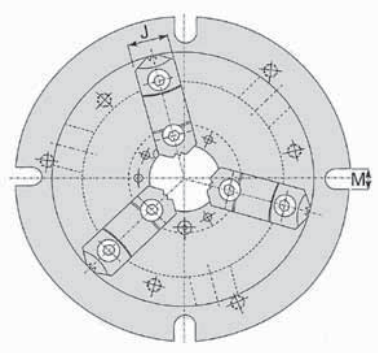

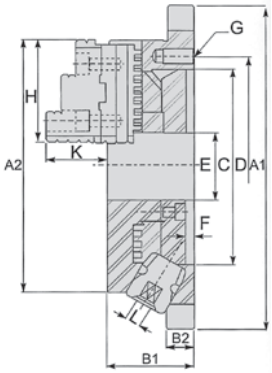

ORDER NO	MODEL	A1	A2	B1	B2	C	D	E	F	G	H	J	K	L	M	Weight	External (mm)	Internal (mm)
425-006	NBK-6	220	170	58	18	130	147	45	6	3-M10	68	26	40	10	13	11 kg	ø8-ø160	ø48-ø150
425-008	NBK-8	270	210	65	20	155	172	60	6	3-M10	82	28	45	11	13	19.5 kg	ø11-ø200	ø62-ø190
425-010	NBK-10	315	255	73	20	190	210	80	6	3-M12	93	32	52	12	16	29.5 kg	ø12-ø250	ø72-ø240
425-012	NBK-12	370	305	80	22	250	285	105	6	3-M12	117	40	59	14	18	42.5 kg	ø15-ø300	ø86-ø290

Super Thin Square Chucks

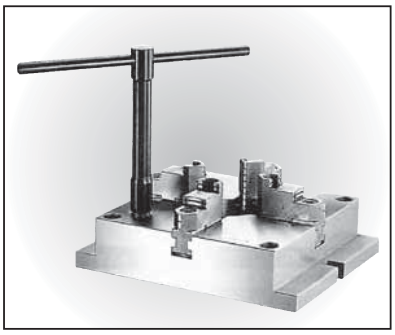

- End-surface Clamping design
- Convex design
- Position key on base plate
- MCA square chucks
- Super thin design
- Unified height for reference point
- Soft-jaws is available

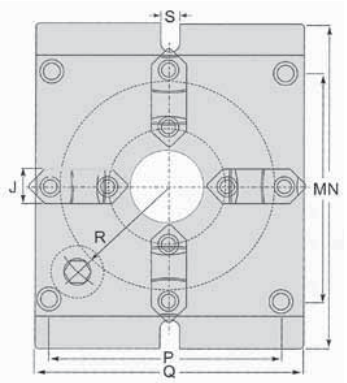

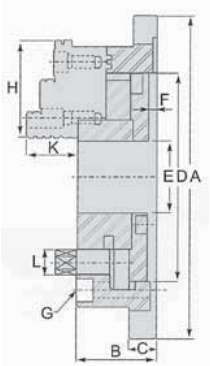

ORDER NO	MODEL	A	B	C	D	E	F	G	H	J	K	L	M	N	P	Q	R	S	MAX. DIA GRIPPED BY External (mm)	Internal (mm)
425-013	MCA-6	215	57	18	130	40	5	4-M10	68	26	39	14	144	165	144	165	66	18	ø8-ø160	ø55-ø128
425-014	MCA-8	250	65	20	160	55	5	4-M12	82	28	43	17	174	200	172	200	83	18	ø5-ø162	ø62-ø162
425-015	MCA-10	310	72	22	200	70	6	4-M14	93	32	50	21	218	250	218	250	103	18	ø6-ø200	ø72-ø200
425-016	MCA-12	380	85	25	260	100	7	4M16	117	40	56	23	274	310	274	310	135	22	ø10-ø265	ø90-ø265

3 & 4 Jaw Precision Self-Centering Chucks With Solid Jaws

3 Jaws

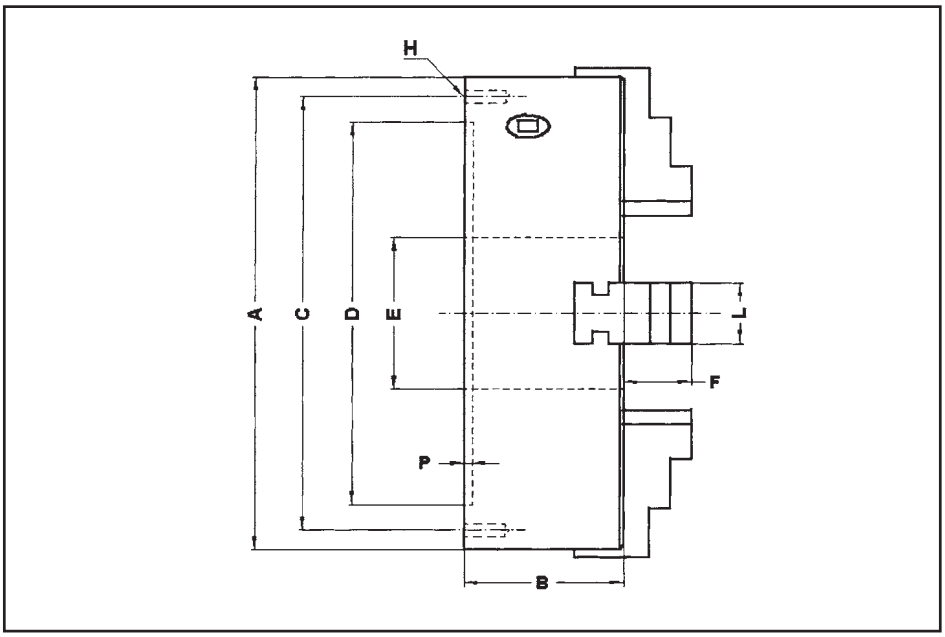

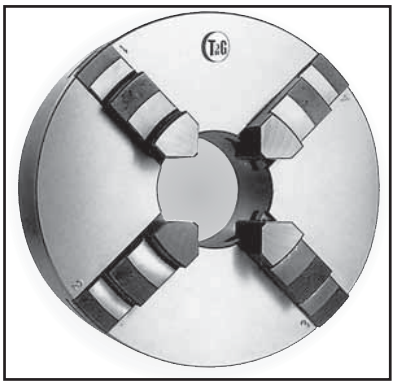

4 Jaws

- **Cast Iron and steel body**
- **Exterior and interior jaws included**
- **Chuck sizes according to DIN 6350 NORM**
- **Centering Tolerances according to UNE 15-430-94/ISO 3089:1991 NORM**

A mm	A inch	B mm	C mm	D mm	E mm	F mm	H	L mm	P mm	=KG.3	=KG.4
85	3”	42	72	62	20	12.90	3xM6	12	3.4	1.6	1.8
110	4”	52.5	95	86	30	17.50	3xM6	15	3.5	3.2	3.4
135	5”	61	117	103	40	21.10	3xM8	18	4	6	6.4
160	6”	65	140	125	42	26.30	3xM10	22	4	10	10.2
200	8”	75	176	160	55	29.30	3xM10	25	4	17	18
250	10”	83	222	202	80	34.50	3xM12	32	4.2	25.8	27.4
315	12.5”	105	284	258	95/105	44.50	3xM14	40	5	51	52.4
350	14”	100	320	290	125/155	53.50	3xM14	40	5	57	59
400	16”	113	362	320	130	53.50	3xM16	40	5	90	92
500	20”	141	458	400	165	74.50	6xM16	45	6	175	179.5
630	24”	140	586	545	205	74.5	6xM16	45	7	195	199.5

Note: For mounting on rotary tables or center mounts, chucks may be supplied with through holes from the front of the chuck.

3 & 4 Jaw Precision Self-Centering Chucks With Solid Jaws

3 Jaws

Ø SIZE	RECESS MOUNT		DIN55029		DIN55026		DIN 55027	
BODY	IRON	STEEL		STEEL		STEEL		STEEL
135mm 5”	1UF3M13500	1UA3M13500	D-4 D-5	1UA3M13542 1UA3M13543			3 4	1UA3M13521 1UA3M13522
160mm 6”	1UF3M16000	1UA3M16000	D-4 D-5	1UA3M16042 1UA3M16043	A1-4 A1-5	1UA3M16012 1UA3M16013	4 5 6	1UA4M16022 1UA4M16023 1UA4M16024
200mm 8”	1UF3M20000	1UA3M20000	D-4 D-5 D-6	1UA3M20042 1UA3M20043 1UA3M20044	A1-4 A1-5 A1-6	1UA3M20012 1UA3M20013 1UA3M20014	5 6	1UA3M20023 1UA3M20024
250mm 10”	1UF3M25000	1UA3M25000	D-5 D-6 D-8	1UA3M25043 1UA3M25044 1UA3M25045	A2-5 A1-6	1UA3M25013 1UA3M25014	5 6 8	1UA3M25023 1UA3M25024 1UA3M25025
315mm 12.5”	1UF3M31500	1UA3M31500	D-6 D-8 D-11	1UA3M31544 1UA3M31545 1UA3M31546	A2-6 A1-8	1UA3M31514 1UA3M31515	6 8 11	1UA3M31524 1UA3M31525 1UA3M31526
350mm 14”	1UF3M35000	1UA3M35000	D-6 D-8 D-11	1UA3M35044 1UA3M35045 1UA3M35046	A2-6 A2-8 A2-11	1UA3M35014 1UA3M35015 1UA3M35016	6 8 11	1UA3M35024 1UA3M35025 1UA3M35026
400mm 16”	1UF3M40000	1UA3M40000	D-6 D-8 D-11	1UA3M40044 1UA3M40045 1UA3M40046	A2-6 A2-8 A2-11	1UA3M40014 1UA3M40015 1UA3M40016	6 8 11	1UA3M40024 1UA3M40025 1UA3M40026
500mm 20”	1UF3M50000	1UA3M50000	D-8 D-11 D-15	1UA3M50045 1UA3M50046 1UA3M50047	A2-8 A2-11 A2-15	1UA3M50015 1UA3M50016 1UA3M50017	8 11	1UA3M50025 1UA3M50026
630mm 24”	1UF3M63000	1UA3M63000	D-8 D-11 D-15	1UA3M63045 1UA3M63046 1UA3M63047	A2-8 A2-11 A2-15	1UA3M63015 1UA3M63016 1UA3M63017	8 11	1UA3M63025 1UA3M63026

4 Jaws

Ø SIZE	RECESS MOUNT		DIN55029		DIN55026		DIN 55027	
BODY	IRON	STEEL		STEEL		STEEL		STEEL
160mm 6”	1UF4M16000	1UA4M16000	D-4 D-5	1UA4M16042 1UA4M16043	A1-4 A1-5	1UA4M16012 1UA4M16013	4 5 6	1UA4M16022 1UA4M16023 1UA4M16024
200mm 8”	1UF4M20000	1UA4M20000	D-4 D-5 D-6	1UA4M20042 1UA4M20043 1UA4M20044	A1-4 A1-5 A1-6	1UA4M20012 1UA4M20013 1UA4M20014	4 5 6	1UA4M20023 1UA4M20024
250mm 10”	1UF4M25000	1UA4M25000	D-5 D-6 D-8	1UA4M25043 1UA4M25044 1UA4M25045	A2-5 A1-6	1UA4M25013 1UA4M25014	4 5 8	1UA4M25023 1UA4M25024
315mm 12.5”	1UF4M31500	1UA4M31500	D-6 D-8 D-11	1UA4M31544 1UA4M31545 1UA4M31546	A2-6 A1-8	1UA4M31514 1UA4M31515	6 8 11	1UA4M31524 1UA4M31525 1UA4M31526
350mm 14”	1UF4M35000	1UA4M35000	D-6 D-8 D-11	1UA4M35044 1UA4M35045 1UA4M35046	A2-6 A2-8 A2-11	1UA4M35014 1UA4M35015 1UA4M35016	6 8 11	1UA4M35024 1UA4M35025 1UA4M35026
400mm 16”	1UF4M40000	1UA4M40000	D-6 D-8 D-11	1UA4M40044 1UA4M40045 1UA4M40046	A2-6 A2-8 A2-11	1UA4M40014 1UA4M40015 1UA4M40016	6 8 11	1UA4M40024 1UA4M40025 1UA4M40026
500mm 20”	1UF4M50000	1UA4M50000	D-8 D-11 D-15	1UA4M50045 1UA4M50046 1UA4M50047	A2-8 A2-11 A2-15	1UA4M50015 1UA4M50016 1UA4M50017	8 11	1UA4M50025 1UA4M50026
630mm 24”	1UF4M63000	1UA4M63000	D-8 D-11 D-15	1UA4M63045 1UA4M63046 1UA4M63047	A2-8 A2-11 A2-15	1UA4M63015 1UA4M63016 1UA4M63017	8 11	1UA4M63025 1UA4M63026

3 & 4 Jaw Precision Self-Centering Chuck With Hard Reversible Top Jaws

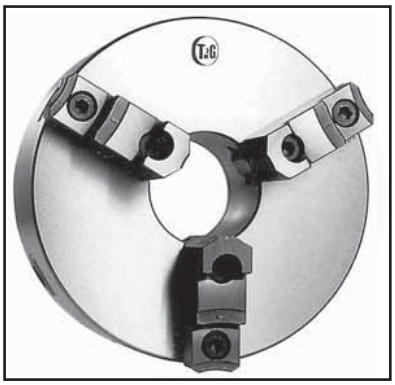

3 Jaws

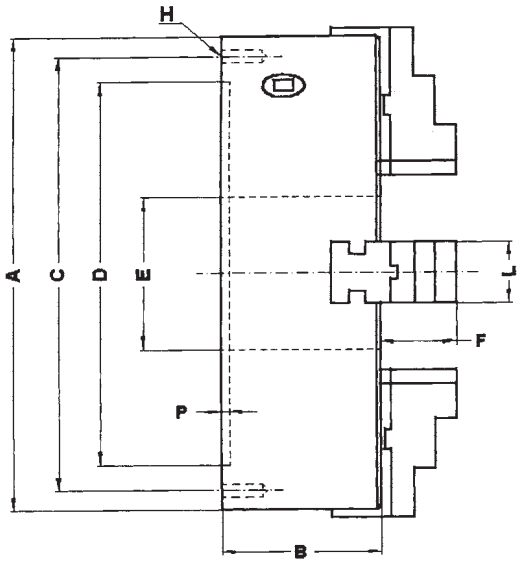

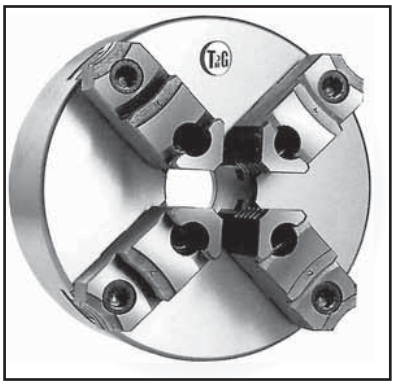

4 Jaws

- **Cast Iron and steel body**
- **Chuck sizes according to DIN 6350 NORM**
- **Centering Tolerances according to DIN 6386/ISO 3089 NORM**
- **Tongue and groove 2 piece jaws according to ASA Norms**

A mm	A inch	B mm	C mm	D mm	E mm	F mm	H	L mm	P mm	=KG.3	=KG.4
160	6”	65	140	125	42	41.7	3xM10	22	4	10	10.2
200	8”	75	176	160	55	43	3xM10	25	4	17	18
250	10”	83	222	202	80	53.6	3xM12	32	4.2	25.8	27.4
315	12.5”	105	284	258	95/105	54	3xM14	40	5	51	52.4
350	14”	100	320	290	125/155	62.1	3xM14	40	5	57	59
400	16”	113	362	320	130	62.1	3xM16	40	5	90	92
500	20”	141	458	400	165	82	6xM16	45	6	175	179.5
630	24”	140	586	545	205	82	6xM16	45	7	195	199.5

Note: For mounting on rotary tables or center mounts, chucks may be supplied with through holes from the front of the chuck.

3 & 4 Jaw Precision Self-Centering Chuck With Hard Reversible Top Jaws

3 Jaws

Ø SIZE	RECESS MOUNT	DIN55029		DIN55026		DIN 55027	
BODY	STEEL		STEEL		STEEL		STEEL
160mm 6”	1UA3R16000	D-4 D-5	1UA3R16042 1UA3R16043	A1-4 A1-5	1UA3R16012 1UA3R16013	4 5 6	1UA3R16022 1UA3R16023 1UA3R16024
200mm 8”	1UA3R20000	D-4 D-5 D-6	1UA3R20042 1UA3R20043 1UA3R20044	A1-4 A1-5 A1-6	1UA3R20012 1UA3R20013 1UA3R20014	4 5 6	1UA3R20023 1UA3R20024
250mm 10”	1UA3R25000	D-5 D-6 D-8	1UA3R25043 1UA3R25044 1UA3R25045	A2-5 A1-6	1UA3R25013 1UA3R25014	4 5 8	1UA3R25023 1UA3R25024 1UA3R25025
315mm 12.5”	1UA3R31500	D-6 D-8 D-11	1UA3R31544 1UA3R31545 1UA3R31546	A2-6 A1-8	1UA3R31514 1UA3R31515	6 8 11	1UA3R31524 1UA3R31525 1UA3R31526
350mm 14”	1UA3R35000	D-6 D-8 D-11	1UA3R35044 1UA3R35045 1UA3R35046	A2-6 A2-8 A2-11	1UA3R35014 1UA3R35015 1UA3R35016	6 8 11	1UA3R35024 1UA3R35025 1UA3R35026
400mm 16”	1UA3R40000	D-6 D-8 D-11	1UA3R40044 1UA3R40045 1UA3R40046	A2-6 A2-8 A2-11	1UA3R40014 1UA3R40015 1UA3R40016	6 8 11	1UA3R40024 1UA3R40025 1UA3R40026
500mm 20”	1UA3R50000	D-8 D-11 D-15	1UA3R50045 1UA3R50046 1UA3R50047	A2-8 A2-11 A2-15	1UA3R50015 1UA3R50016 1UA3R50017	8 11	1UA3R50025 1UA3R50026
630mm 24”	1UA3R63000	D-8 D-11 D-15	1UA3R63045 1UA3R63046 1UA3R63047	A2-8 A2-11 A2-15	1UA3R63015 1UA3R63016 1UA3R63017	8 11	1UA3R63025 1UA3R63026

4 Jaws

Ø SIZE	RECESS MOUNT	DIN55029		DIN55026		DIN 55027	
BODY	STEEL		STEEL		STEEL		STEEL
160mm 6”	1UA4R16000	D-4 D-5	1UA4R16042 1UA4R16043	A1-4 A1-5	1UA4R16012 1UA4R16013	4 5 6	1UA4R16022 1UA4R16023 1UA4R16024
200mm 8”	1UA4R20000	D-4 D-5 D-6	1UA4R20042 1UA4R20043 1UA4R20044	A1-4 A1-5 A1-6	1UA4R20012 1UA4R20013 1UA4R20014	4 5 6	1UA4R20023 1UA4R20024
250mm 10”	1UA4R25000	D-5 D-6 D-8	1UA4R25043 1UA4R25044 1UA4R25045	A2-5 A1-6	1UA4R25013 1UA4R25014	4 5 8	1UA4R25023 1UA4R25024
315mm 12.5”	1UA4R31500	D-6 D-8 D-11	1UA4R31544 1UA4R31545 1UA4R31546	A2-6 A1-8	1UA4R31514 1UA4R31515	6 8 11	1UA4R31524 1UA4R31525 1UA4R31526
350mm 14”	1UA4R35000	D-6 D-8 D-11	1UA4R35044 1UA4R35045 1UA4R35046	A2-6 A2-8 A2-11	1UA4R35014 1UA4R35015 1UA4R35016	6 8 11	1UA4R35024 1UA4R35025 1UA4R35026
400mm 16”	1UA4R40000	D-6 D-8 D-11	1UA4R40044 1UA4R40045 1UA4R40046	A2-6 A2-8 A2-11	1UA4R40014 1UA4R40015 1UA4R40016	6 8 11	1UA4R40024 1UA4R40025 1UA4R40026
500mm 20”	1UA4R50000	D-8 D-11 D-15	1UA4R50045 1UA4R50046 1UA4R50047	A2-8 A2-11 A2-15	1UA4R50015 1UA4R50016 1UA4R50017	8 11	1UA4R50025 1UA4R50026
630mm 24”	1UA4R63000	D-8 D-11 D-15	1UA4R63045 1UA4R63046 1UA4R63047	A2-8 A2-11 A2-15	1UA4R63015 1UA4R63016 1UA4R63017	8 11	1UA4R63025 1UA4R63026

3 & 4 Jaw Precision Self-Centering Large Diameter Chucks With Hard Reversible Top Jaws

Large Diameter Concentric Chucks

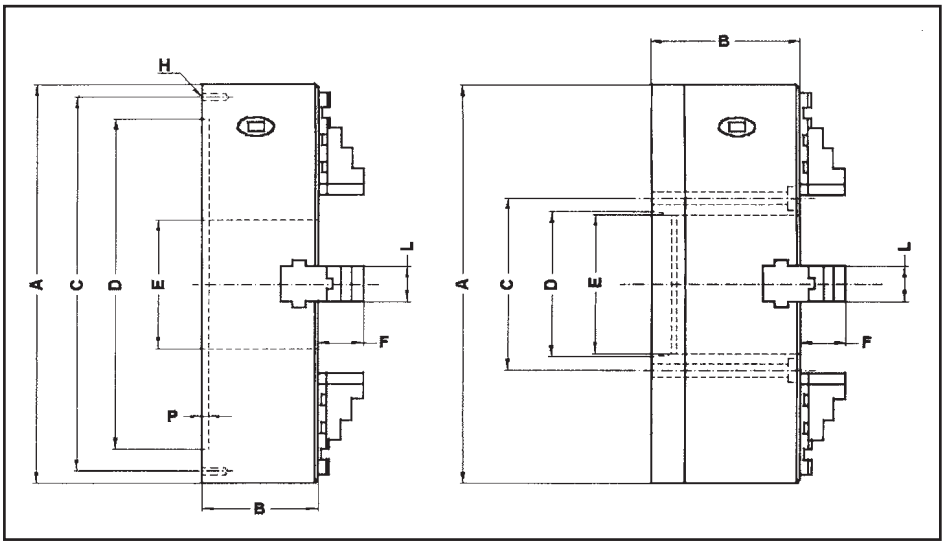

- **Cast Iron and forged steel body.**
- **Induction Hardened in areas of friction.**
- **Chuck bodies fully ground, included guidelines.**
- **Two piece jaws according to ASA norms.**
- **Steel jaws cement hardened, treated and ground on all surfaces.**
- **Scroll Induction hardened and ground on spiral and internal diameter.**

A mm	A inch	Acop.	E mm	D mm	C mm	H	B mm	F mm	L mm	Fig.
700	27 1/2”	recess mounting	225	630	660	6xM20	145	82	60	1
		11”	192	196.8	235	segun	163	82	60	2
		15”	268	285.8	330	el	163	82	60	2
		20”	320	412.8	463/368	acorp	163	82	60	2
800	31 1/2”	recess mounting	268	730	760	6xM20	155	82	60	1
		11”	268	196.8	235	segun	173	82	60	2
		15”	268	285.8	330	el	173	82	60	2
		20”	381	412.8	463	acorp	175	82	60	2
900	35 2/5”	recess mounting	375	810	850	6xM22	165	82	60	1
		11”	281	196.8	235	segun	183	82	60	2
		15”	281	285.8	330	el	185	82	60	2
		20”	375	412.8	463	acorp.	185	82	60	2
1000	39 2/5”	recess mounting	390	910	950	6xM24	165	82	60	1
		15”	281	285.8	330	segun	188	82	60	2
		20”	408	412.8	463	acorp.	195	82	60	2

3 & 4 Jaw Precision Self-Centering Large Diameter Chucks With Hard Reversible Top Jaws

3 Jaws

Ø SIZE	RECESS MOUNT	DIN55029		DIN55026		DIN 55027	
BODY	STEEL		STEEL		STEEL		STEEL
700mm 27-1/2”	1UA3R70000	D-11 D-15	1UA3R70046 1UA3R70047	A2-11 A2-15	1UA3R70016 1UA3R70017	11 15 20	1UA3R70026 1UA3R70027 1UA3R70028
800mm 31-1/2”	1UA3R80000	D-11 D-15	1UA3R80046 1UA3R80047	A2-11 A2-15	1UA3R80016 1UA3R80017	11 15 20	1UA3R80026 1UA3R80027 1UA3R80028
900mm 35-2/5”	1UA3R90000	D-11 D-15	1UA3R90046 1UA3R90047	A2-11 A2-15 A2-20	1UA3R90016 1UA3R90017 1UA3R90018	11 15 20	1UA3R90026 1UA3R90027 1UA3R90028
1000mm 39-2/5”	1UA3R01000	 D-15	 1UA3R01047	A2-15 A2-20	1UA3R01017 1UA3R01018	15 20	1UA3R01027 1UA3R01028

4 Jaws

Ø SIZE	RECESS MOUNT	DIN55029		DIN55026		DIN 55027	
BODY	STEEL		STEEL		STEEL		STEEL
700mm 27-1/2”	1UA4R70000	D-11 D-15	1UA4R70046 1UA4R70047	A2-11 A2-15	1UA4R70016 1UA4R70017	11 15 20	1UA4R70026 1UA4R70027 1UA4R70028
800mm 31-1/2”	1UA4R80000	D-11 D-15	1UA4R80046 1UA4R80047	A2-11 A2-15	1UA4R80016 1UA4R80017	11 15 20	1UA4R80026 1UA4R80027 1UA4R80028
900mm 35-2/5”	1UA4R90000	D-11 D-15	1UA4R90046 1UA4R90047	A2-11 A2-15 A2-20	1UA4R90016 1UA4R90017 1UA4R90018	11 15 20	1UA4R90026 1UA4R90027 1UA4R90028
1000mm 39-2/5”	1UA4R01000	 D-15	 1UA4R01047	A2-15 A2-20	1UA4R01017 1UA4R01018	15 20	1UA4R01027 1UA4R01028

3 & 4 Oil Country Self-Centering Chucks With Hard Reversible Top Jaws

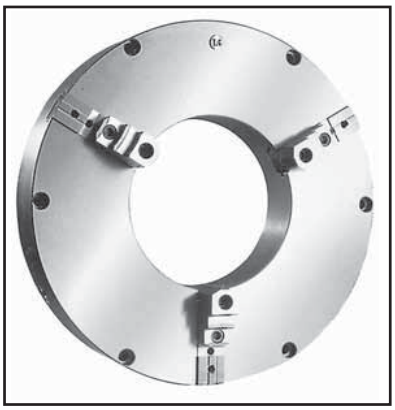

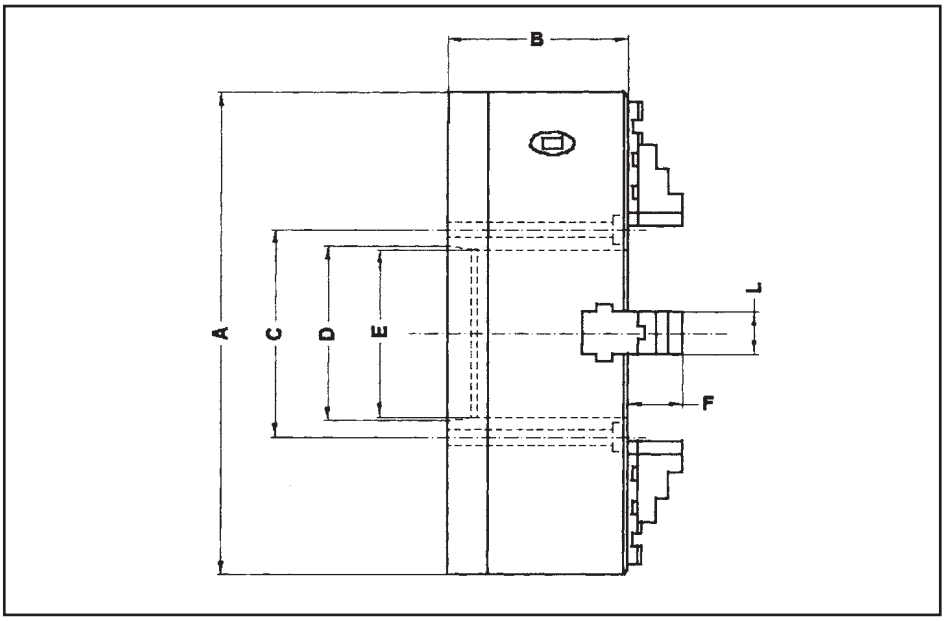

- **Forged steel body**
- **Extra heavy duty American Standard, hard top and master jaws**
- **Large thru holes standard**
- **Direct A ASA B5.9 A/DIN 55026 Type mounting**

A mm	A inch	Acop.	D mm	E mm	C mm	B mm	F mm	L mm	Code 3 Jaws	Code 4 Jaws
500	20”	A2-11	196.88	192	235	161	83	60	1U03R50016	1U04R50016
		A1-15	285.80	204	2476	161	83	60	1U03R50017	1U04R50017
		A2-20	412.80	204	463	171	83	60	1U03R50018	1U04R50018
630	24-4/5”	A2-15	285.80	280	330.2	168	83	60	1U03R63017	1U04R63017
		A1-20	412.80	318	368.3	170	83	60	1U03R63018	1U04R63018
700	27-5/9”	A215	285.80	280	330.2	173	92	75	1U03R70017	1U04R70017
		A1-20	412.80	318	368.3	175	92	75	1U03R70018	1U04R70018
800	31-1/2”	A2-15	285.80	280	330.2	178	92	75	1U03R80017	1U04R80017
		A2-20	412.80	370/407	463.6	180	92	75	1U03R80017	1U04R80017
900	35-3/7”	A215	285.80	280	330.2	190	92	75	1U03R90018	1U04R90018
		A2-20	412.80	370/407	463.6	190	92	75	1U03R90018	1U04R90018
1000	39-3/8”	A2-20	412.80	407	463.6	190	92	75	1U03R01018	1U04R01018
		A2-28	584.25	470/572	647.6	194	92	75	1U03R01019	1U04R01019

4-Jaw Oil Country Independent Chucks With Hard Reversible Top Jaws

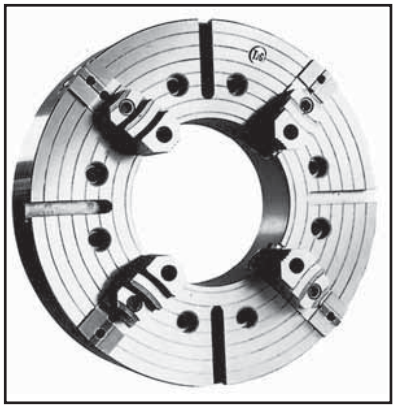

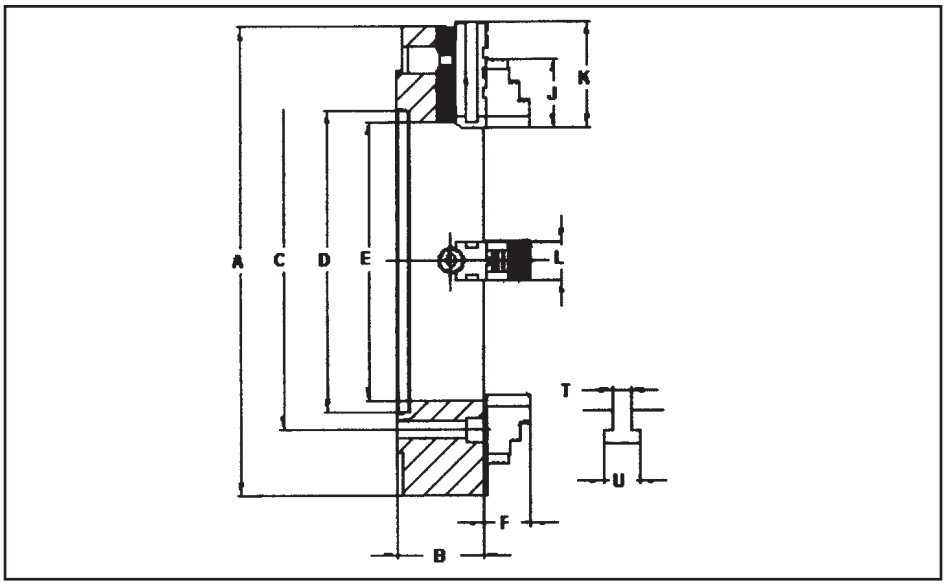

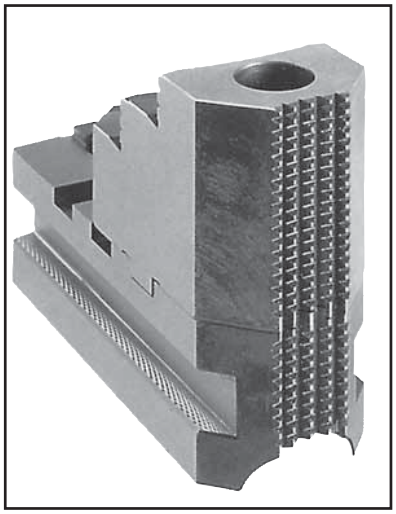

- **Forged steel body**
- **Extra heavy duty American Standard, hard top and master jaws**
- **Large thru holes standard**
- **Direct A ASA B5.9 A/DIN 55026 Type mounting**

Gripping Surfaces Serrated for More Holding Power

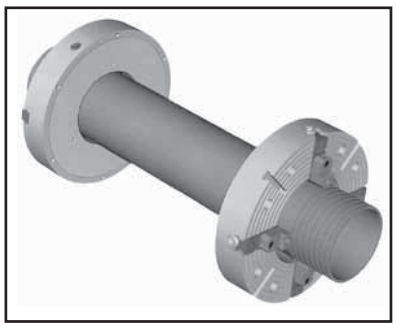

A mm	A inch	CONE	D mm	E mm	C mm	B mm	K mm	F mm	L mm	T mm	U mm	REF./CODE
450	18”	A2-11”	196.8	165	235	146	165	83	60	22	40	1I04R45016
530	21”	A2-11”	196.8	167	235	146	165	83	60	22	40	1I04R53016
		A2-15”	285.8	167	330.2	146	165	83	60	22	40	1I04R53017
600	24”	A2-11”	196.8	167	235	155	203	92	75	22	40	1I04R60016
		A2-15”	285.8	267	330.2	155	203	92	75	22	40	1I04R60017
		A2-20”	412.8	318	463.6	155	203	92	75	22	40	1I04R60018
700	28”	A2-15”	285.8	267	330.2	155	203	92	75	22	40	1I04R70017
		A2-20”	412.8	318	463.6	155	203	92	75	22	40	1I04R70018
800	32”	A2-15”	285.8	267	330.2	165	203	92	75	22	40	1I04R80017
		A2-20”	412.8	318	463.6	165	203	92	75	22	40	1I04R80018
900	36”	A2-15”	285.8	267	330.2	165	203	92	75	22	40	1I04R90017
		A2-20”	412.8	318	463.6	165	203	92	75	22	40	1I04R90018
1000	40”	42-20”	412.8	318	463.6	165	203	92	75	28	48	1I04R01018

4-Jaw Independent Chucks With Solid Hard Reversible Jaws

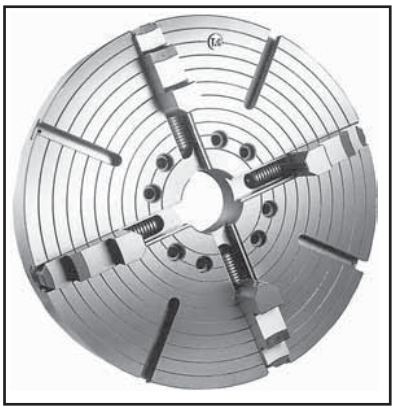

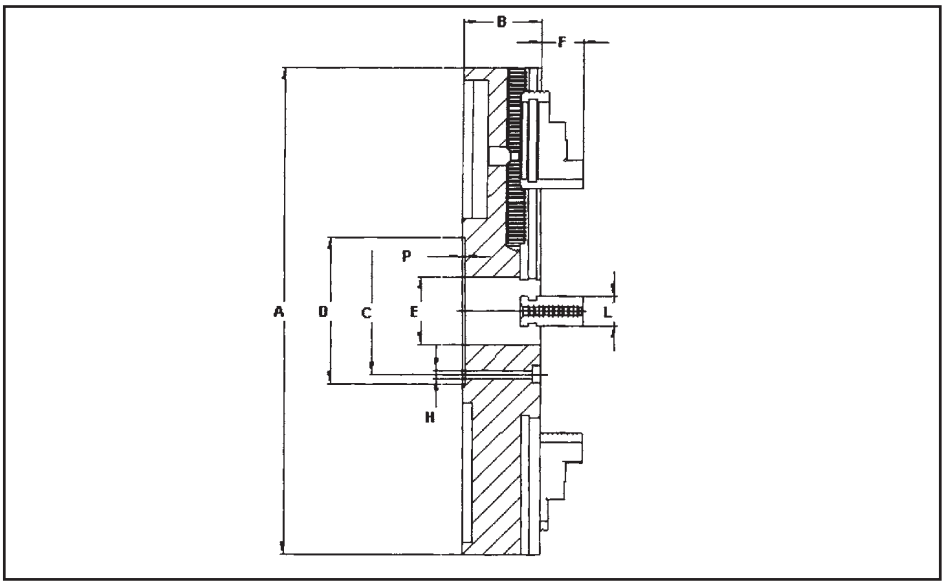

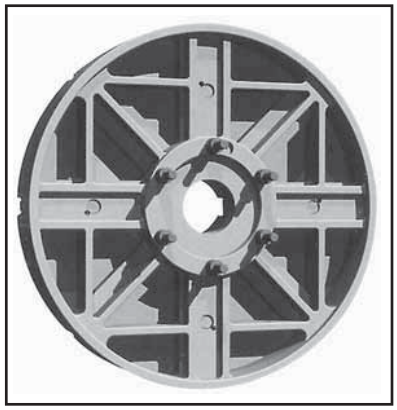

- **Cast Iron and steel body**
- **Solid Reversible Jaws**
- **Direct Mounting**
- **Operating Screw Hardened and Ground**
- **"T" Slots For Diameters 500mm (20") and Above**

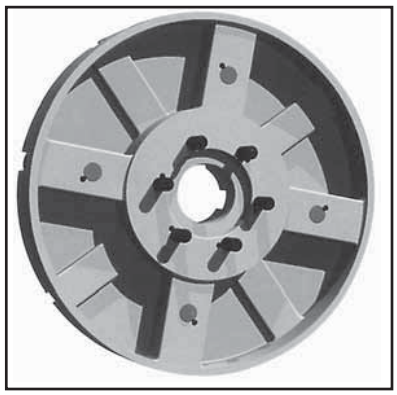

A mm	A inch	B mm	C mm	D mm	E mm	F mm	H	L mm	P mm
160	6"	60	72	145	42	28	4xM8	19.4	5
200	8"	66	120	100	45	33	4xM8	19.4	5
250	10"	76	102	122	60	32.5	4xM12	30	5
300	12"	76	125	150	60	32.5	4xM12	30	5
350	14"	80	125	150	75	44.5	4xM12	35	5
400	16"	80	150	175	80	44.5	4xM18	35	5
450	18"	80	168	200	100	44.5	4xM18	35	5
500	20"	80	220	250	100	44.5	4xM18	35	5
600	24"	100	220	250	100	89	8xM18	50	5
700	28"	120	220	250	120	89	8xM18	50	5
800	32"	125	220	250	135	89	8xM18	50	5
900	36"	135	220	250	140	89	8xM18	50	5
1000	40"	140	250	300	150	89	8xM20	60	7
1200	48"	145	250	300	160	89	8xM20	60	7
1400	56"	150	250	300	160	89	8xM24	60	7
1500	60"	165	250	300	160	89	8xM24	60	7

4-Jaw Independent Chucks With Solid Hard Reversible Jaws

Ø SIZE		RECESS MOUNT		DIN55029			DIN55026			DIN 55027		
mm	Inch	IRON	STEEL		IRON	STEEL		IRON	STEEL		IRON	STEEL
160	6”	–	1IA4M16000	D-5	–	1IA4M16043	A-5	–	1IA4M16013	5	–	1IA4M16023
200	8’	–	1IA4M20000	D-5	–	1IA4M20043	A-5	–	1IA4M20013	5	–	1IA4M20023
				D-6	–	1IA4M20044	A-6	–	1IA4M20014	6	–	1IA4M20024
250	10”	–	1IA4M25000	D-5	–	1IA4M25043	A-5	–	1IA4M25013	5	–	1IA4M25023
				D-6	–	1IA4M25044	A-6	–	1IA4M25014	6	–	1IA4M25024
				D-5	–	1IA4M30043	A-5	–	1IA4M30013	5	–	1IA4M30023
300	12”	–	1IA4M30000	D-6	–	1IA4M30044	A-6	–	1IA4M30014	6	–	1IA4M30024
				D-8	–	1IA4M30045	A-8	–	1IA4M30015	8	–	1IA4M30025
				D-6	1IF4M35044	1IA4M35044	A-5	1IF4M35014	1IA4M35014	5	1IF4M35023	1IA4M35023
350	14”	1IF4M35000	1IA4M35000							6	1IF4M35024	1IA4M35024
				D-8	1IF4M35045	1IA4M35045	A-8	1IF4M35015	1IA4M35015	8	1IF4M35025	1IA4M35025
				D-6	1IF4M40044	1IA4M40044	A-6	1IF4M40014	1IA4M40014	5	1IF4M40023	1IA4M40023
400	16”	1IF4M40000	1IA4M40000							6	1IF4M40024	1IA4M40024
				D-8	1IF4M40045	1IA4M40045	A-8	1IF4M40015	1IA4M40015	8	1IF4M40025	1IA4M40025
				D-11	1IF4M40046	1IA4M40046	A-11	1IF4M40016	1IA4M40016	11	1IF4M40026	1IA4M40026
				D-6	1IF4M45044	1IA4M45044	A-6	1IF4M45014	1IA4M45014	6	1IF4M45024	1IA4M45024
450	18”	1IF4M45000	1IA4M45000	D-8	1IF4M45045	1IA4M45045	A-8	1IF4M45015	1IA4M45015	8	1IF4M45025	1IA4M45025
				D-11	1IF4M45046	1IA4M45046	A-11	1IF4M45016	1IA4M45016	11	1IF4M45026	1IA4M45026
				D-6	1IF4M50044	1IA4M50044	A-6	1IF4M50014	1IA4M50014	6	1IF4M50024	1IA4M50024
500	20”	1IF4M50000	1IA4M50000	D-8	1IF4M50045	1IA4M50045	A-8	1IF4M50015	1IA4M50015	8	1IF4M50025	1IA4M50025
				D-11	1IF4M50046	1IA4M50046	A-11	1IF4M50016	1IA4M50016	11	1IF4M50026	1IA4M50026
				D-8	1IF4M60045	1IA4M60045	A-8	1IF4M60015	1IA4M60015	6	1IF4M60024	1IA4M60024
600	24”	1IF4M60000	1IA4M60000							8	1IF4M60025	1IA4M60025
				D-11	1IF4M60046	1IA4M60046	A-11	1IF4M60016	1IA4M60016	11	1IF4M60026	1IA4M60026
				D-8	1IF4M70045	1IA4M70045	A-8	1IF4M70015	1IA4M70015	8	1IF4M70025	1IA4M70025
700	28”	1IF4M70000	1IA4M70000							11	1IF4M70026	1IA4M70026
				D-11	1IF4M70046	1IA4M70046	A-11	1IF4M70016	1IA4M70016	15	1IF4M70027	1IA4M70027
				D-8	1IF4M80045	1IA4M80045	A-8	1IF4M80015	1IA4M80015	8	1IF4M80025	1IA4M80025
800	32”	1IF4M80000	1IA4M80000	D-11	1IF4M80046	1IA4M80046	A-11	1IF4M80016	1IA4M80016	11	1IF4M80026	1IA4M80026
							A-15	1IF4M80017	1IA4M80017	15	1IF4M80027	1IA4M80027
				D-11	1IF4M80046	1IA4M80046	A-11	1IF4M90016	1IA4M90016	8	1IF4M90026	1IA4M90026
900	36”	1IF4M90000	1IA4M90000							11	1IF4M90026	1IA4M90026
							A-15	1IF4M90017	1IA4M90017	15	1IF4M90027	1IA4M90027
				D-11	1IF4M01046	1IA4M01046	A-11	1IF4M01016	1IA4M01016	8	1IF4M01026	1IA4M01026
1000	40”	1IF4M01000	1IA4M01000							11	1IF4M01026	1IA4M01026
				D-15	1IF4M01047	1IA4M01047	A-15	1IF4M01017	1IA4M01017	15	1IF4M01027	1IA4M01027
				D-11	1IF4M01246	1IA4M01246	A-11	1IF4M01216	1IA4M01216			
1200	48”	1IF4M01200	1IA4M01200	D-15	1IF4M01247	1IA4M01247	A-15	1IF4M01217	1IA4M01217			
							A-20	1IF4M01218	1IA4M01218			
				D-11	1IF4M01446	1IA4M01446	A-11	1IF4M01416	1IA4M01416			
1400	56”	1IF4M01400	1IA4M01400	D-15	1IF4M01447	1IA4M01447	A-15	1IF4M01417	1IA4M01417			
							A-20	1IF4M01418	1IA4M01418			
1500	60”	1IF4M01500	1IA4M01500	D-15	1IF4M01547	1IA4M01547	A-15	1IF4M01517	1IA4M01517			
							A-20	1IF4M01518	1IA4M01518			

4-Jaw Independent Chucks With Hard Reversible Top Jaws

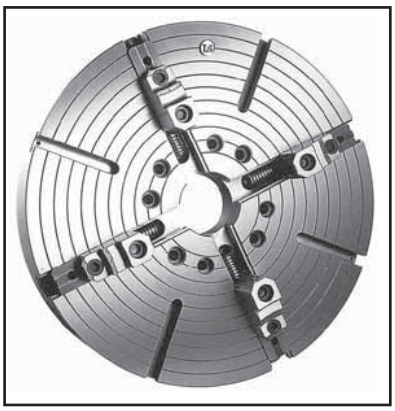

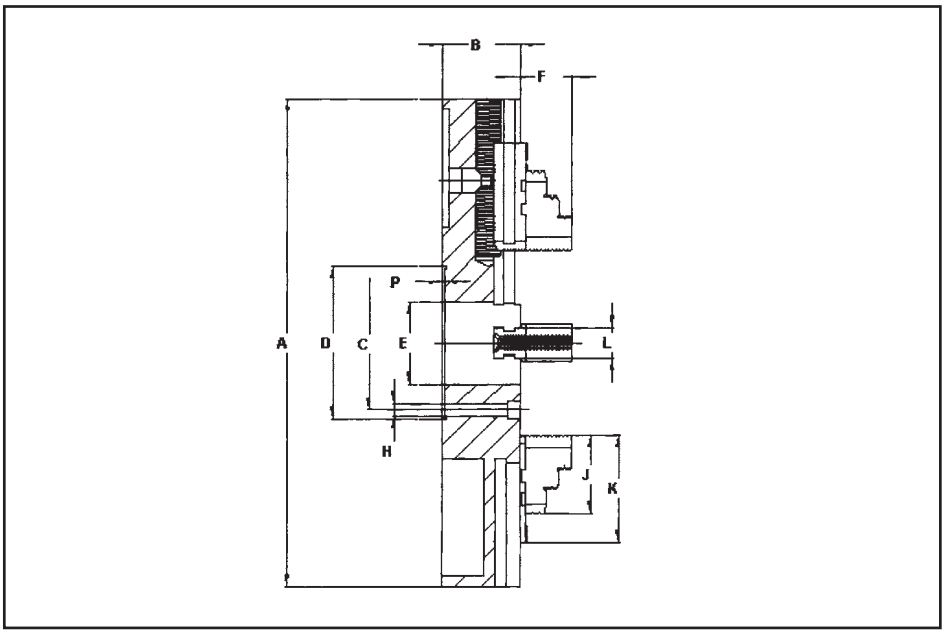

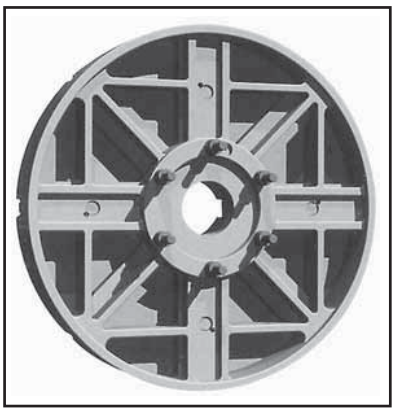

- **Cast Iron and steel body**
- **Two Piece Jaws According to ASA Norms Jaws**
- **Direct Mounting**
- **Operating Screw Hardened and Ground**
- **"T" Slots For Diameters 500mm (20") and Above**

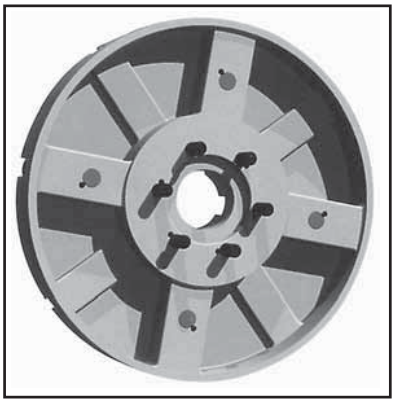

A mm	A inch	B mm	C mm	D mm	E mm	F mm	H	J mm	K mm	L mm	P mm
350	14"	80	125	150	75	68.8	4xM12	127	127	35	5
400	16"	80	150	175	80	68.8	4xM18	127	127	35	5
450	18"	100	168	200	100	86.3	4xM18	127	165	35	5
500	20"	100	220	250	100	86.3	4xM18	127	165	35	5
600	24"	100	220	250	100	83.7	8xM20	127	175	50	5
700	28"	120	220	250	120	83.7	8xM20	127	175	50	5
800	32"	125	220	250	135	83.7	8xM20	127	175	50	5
900	36"	135	220	250	140	83.7	8xM20	127	175	50	5
1000	40"	140	250	300	150	89	8xM20	127	203	60	7
1200	48"	145	250	300	160	89	8xM20	127	203	60	7
1400	56"	150	250	300	160	89	8xM24	127	203	60	7
1500	60"	165	250	300	160	89	8xM24	127	203	60	7

4-Jaw Independent Chucks With Hard Reversible Top Jaws

Ø SIZE		RECESS MOUNT		DIN55029			DIN55026			DIN 55027		
mm	Inch	IRON	STEEL		IRON	STEEL		IRON	STEEL		IRON	STEEL
				D-6	–	1IA4R35044	A-6	–	1IA4R35014	5	–	1IA4R35023
350	14”	–	1IA4M35000		–			–		6	–	1IA4R35024
				D-8	–	1IA4R35045	A-7	–	1IA4R35015	8	–	1IA4R35025
				D-6	1IF4R40044	1IA4R40044	A-6	1IF4R40014	1IA4R40014	5	1IF4R40023	1IA4R40023
400	16”	1IF4R40000	1IA4R40000							6	1IF4R40024	1IA4R40024
				D-8	1IF4R40045	1IA4R40045	A-8	1IF4R40015	1IA4R40015	8	1IF4R40025	1IA4R40025
				D-11	1IF4R40046	1IA4R40046	A-11	1IF4R40016	1IA4R40016	11	1IF4R40026	1IA4R40026
				D-6	1IF4R45044	1IA4R45044	A-6	1IF4R45014	1IA4R45014	6	1IF4R45024	1IA4R45024
450	18”	1IF4R45000	1IA4R45000	D-8	1IF4R45045	1IA4R45045	A-8	1IF4R45015	1IA4R45015	8	1IF4R45025	1IA4R45025
				D-11	1IF4R45046	1IA4R45046	A-11	1IF4R45016	1IA4R45016	11	1IF4R45026	1IA4R45026
				D-6	1IF4R50044	1IA4R50044	A-6	1IF4R50014	1IA4R50014	6	1IF4R50024	1IA4R50024
500	20”	1IF4R50000	1IA4R50000	D-8	1IF4R50045	1IA4R50045	A-8	1IF4R50015	1IA4R50015	8	1IF4R50025	1IA4R50025
				D-11	1IF4R50046	1IA4R50046	A-11	1IF4R50016	1IA4R50016	11	1IF4R50026	1IA4R50026
				D-8	1IF4R60045	1IA4R60045	A-8	1IF4R60015	1IA4R60015	6	1IF4R60024	1IA4R60024
600	24”	1IF4R60000	1IA4R60000							8	1IF4R60025	1IA4R60025
				D-11	1IF4R60046	1IA4R60046	A-11	1IF4R60016	1IA4R60016	11	1IF4R60026	1IA4R60026
				D-8	1IF4R70045	1IA4R70045	A-8	1IF4R70015	1IA4R70015	8	1IF4R70025	1IA4R70025
700	28”	1IF4R70000	1IA4R70000							11	1IF4R70026	1IA4R70026
				D-11	1IF4R70046	1IA4R70046	A-11	1IF4R70016	1IA4R70016	15	1IF4R70027	1IA4R70027
				D-8	1IF4R80045	1IA4R80045	A-8	1IF4R80015	1IA4R80015	8	1IF4R80025	1IA4R80025
800	32”	1IF4R80000	1IA4R80000	D-11	1IF4R80046	1IA4R80046	A-11	1IF4R80016	1IA4R80016	11	1IF4R80026	1IA4R80026
							A-15	1IF4R80017	1IA4R80017	15	1IF4R80027	1IA4R80027
				D-11	1IF4R80046	1IA4R80046	A-11	1IF4R90016	1IA4R90016	8	1IF4R90026	1IA4R90026
900	36”	1IF4R90000	1IA4R90000							11	1IF4R90026	1IA4R90026
							A-15	1IF4R90017	1IA4R90017	15	1IF4R90027	1IA4R90027
				D-11	1IF4R01046	1IA4R01046	A-11	1IF4R01016	1IA4R01016	8	1IF4R01026	1IA4R01026
1000	40”	1IF4R01000	1IA4R01000							11	1IF4R01026	1IA4R01026
				D-15	1IF4R01047	1IA4R01047	A-15	1IF4R01017	1IA4R01017	15	1IF4R01027	1IA4R01027
				D-11	1IF4R01246	1IA4R01246	A-11	1IF4R01216	1IA4R01216			
1200	48”	1IF4R01200	1IA4R01200	D-15	1IF4R01247	1IA4R01247	A-15	1IF4R01217	1IA4R01217			
							A-20	1IF4R01218				1IA4R01218
				D-11	1IF4R01446	1IA4R01446	A-11	1IF4R01416	1IA4R01416			
1400	56”	1IF4R01400	1IA4R01400	D-15	1IF4R01447	1IA4R01447	A-15	1IF4R01417	1IA4R01417			
							A-20	1IF4R01418				1IA4R01418
1500	60”	1IF4R01500	1IA4R01500	D-15	1IF4R01547	1IA4R01547	A-15	1IF4R01517	1IA4R01517			
							A-20	1IF4R01518				1IA4R01518

4-Jaw Heavy Duty Independent Chucks With Hard Reversible Top Jaws

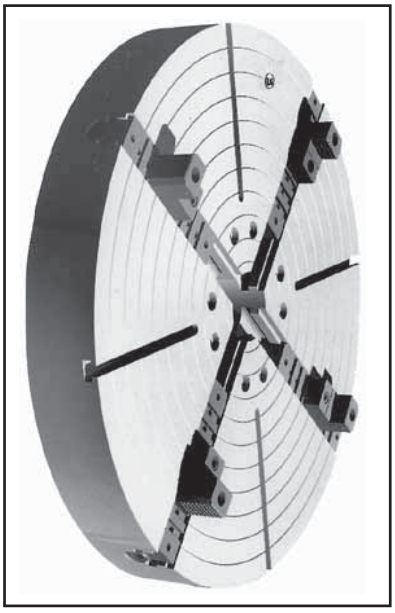

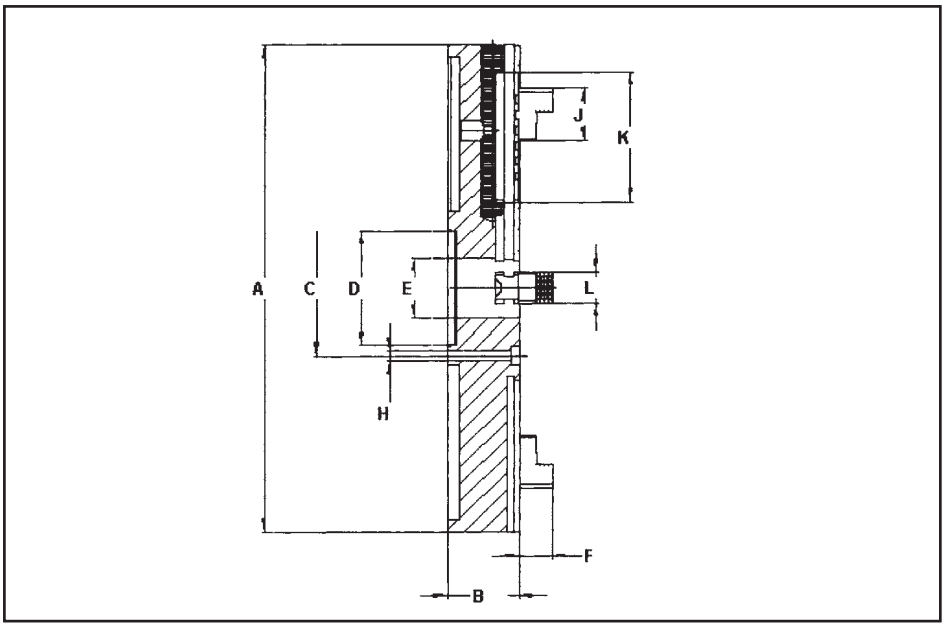

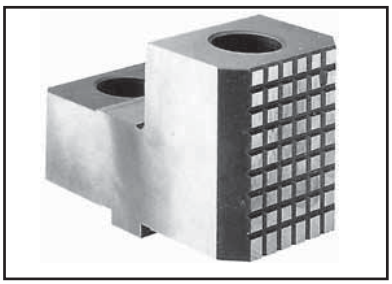

One step Top Jaw For Chucks Ø 600mm and Above

- Heavy duty cast Iron and cast steel body
- Greater body rigidity with reinforced nerves
- Two piece jaw
- Optional long master jaws for added rigidity
- Hardened and ground jaws
- Direct mount

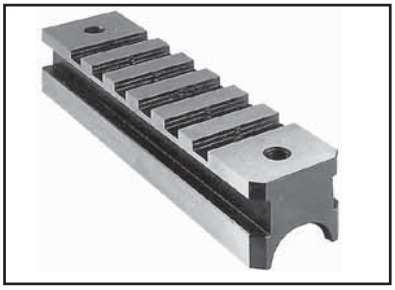

Optional Long Base Jaws

A mm	A inch	B mm	C mm	D mm	H mm	E mm	F mm	J mm	L mm	K mm	K Optional mm
600	24”	135				100	73	127	60	203	250
700	28”	135				120	73	127	60	203	250
800	32”	135				135	73	127	60	203	300
900	36”	135				140	73	127	60	203	322
1000	40”	140				150	78	127	75	203	332
1200	48”	160				160	78	127	75	203	400
1400	56”	170				160	78	127	75	203	450
1500	60”	165				160	78	127	75	203	500
1600	63”	195				170	92	127	90	550	550
1800	71”	205				180	92	127	90	600	600
2000	79”	215				180	92	127	90	650	650

MEASUREMENT ACCORDING TO MOUNTING

4-Jaw Heavy Duty Independent Chucks With Hard Reversible Top Jaws

Ø SIZE		RECESS MOUNT	DIN55029		DIN55026		DIN 55027	
mm	Inch	STEEL		STEEL		STEEL		STEEL
600	24”	1IS4R60000	D-8 D-11	1IS4R60045 1IS4R60046	A-8 A-11	1IS4R60015 1IS4R60016	8 11	1IS4R60025 1IS4R60026
700	28”	1IS4R70000	D-8 D-11	1IS4R70045 1IS4R70046	A-8 A-11	1IS4R70015 1IS4R70016	11 15	1IS4R70026 1IS4R70027
800	32”	1IS4R80000	D-11	1IS4R80046	A-8 A-11 A-15	1IS4R80015 1IS4R80016 1IS4R80017	11 15	1IS4R80026 1IS4R80027
900	36”	1IS4R90000	D-11	1IS4R80046	A-11 A-15	1IS4R90016 1IS4R90017	11 15	1IS4R90026 1IS4R90027
1000	40”	1IS4R01000	D-11 D-15	1IS4R01046 1IS4R01047	A-11 A-15 A-20	1IS4R01016 1IS4R01017	11 15	1IS4R01026 1IS4R01027 1IS4R01018
1200	48”	1IS4R01200	D-11 D-15	1IS4R01246 1IS4R01247	A-11 A-15 A-20	1IS4R01216 1IS4R01217 1IS4R01218		
1400	56”	1IS4R01400	D-11 D-15	1IS4R01446 1IS4R01447	A-11 A-15 A-20	1IS4R01416 1IS4R01417 1IS4R01418		
1500	60”	1IS4L01500	D-15	1IS4R01547	A-15 A-20	1IS4R01517 1IS4R01518		
1600	63”	1IS4L01600	D-15	1IS4L01647	A-15 A-20	1IS4L01617 1IS4L01618		
1800	71”	1IS4L01800			A-15 A-20 A-28	1IS4L01817 1IS4L01818 1IS4L01819		
2000	79”	1IS4L02000			A-15 A-20 A-28	1IS4L02017 1IS4L02018 1IS4L02019		

Box Jaws

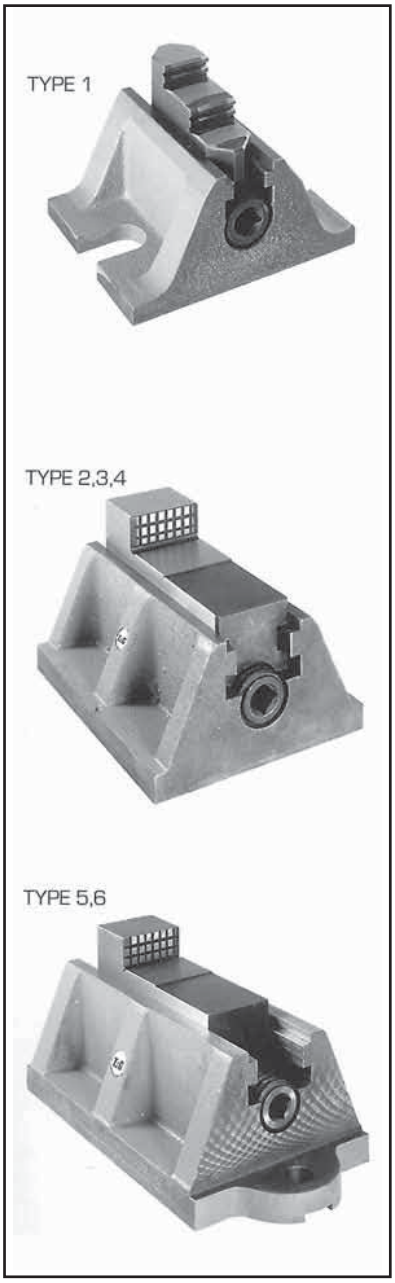

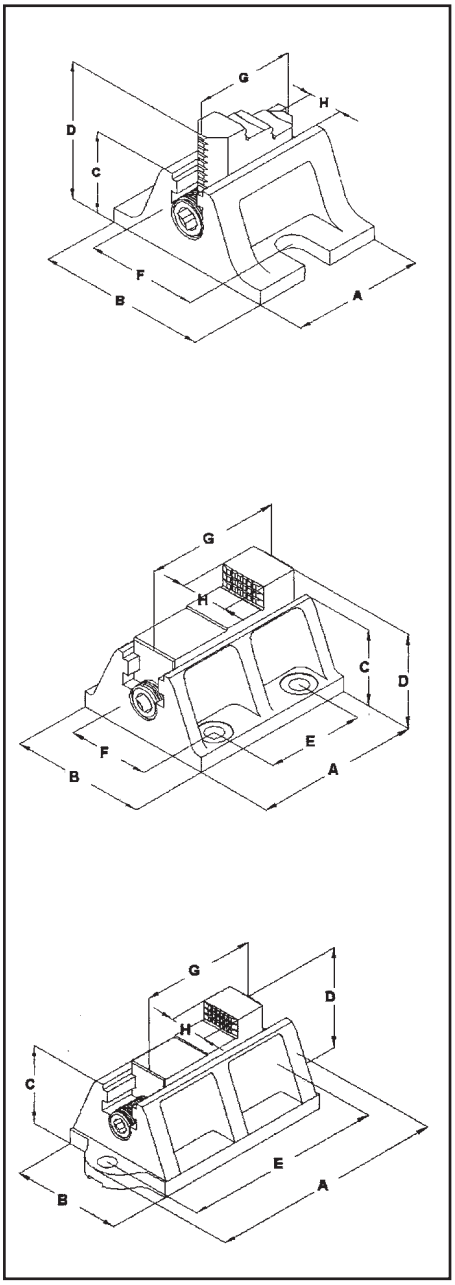

- **Chuck Size from 1000 mm to 2500 mm**
- **Individual unit supply**
- **Wide range of Box-Jaw sizes**
- **To use on lathes and milling machines**
- **Suitable for heavy duty workholding**
- **Greater rigidity of body**
- **Chucks with 4 or more jaws**
- **Direct mounting**
- **Special design according to customer specifications**

TYPE	A mm	B mm	C mm	D mm	E mm	F mm	G mm	H mm	CODE
1	114	146	71	104	–	96	88	30	18L0000100
2	210	172	98	139	125	125	180	50	18L0000200
3	210	172	98	139	125	125	180	60	18L0000300
4	305	220	118	160	177.8	152.4	203	75	18L0000400
5	277	130	90	135	230	–	125	35	18L0000500
6	360	170	118	159	315	–	180	60	18L0000600

Applications for Box Jaws

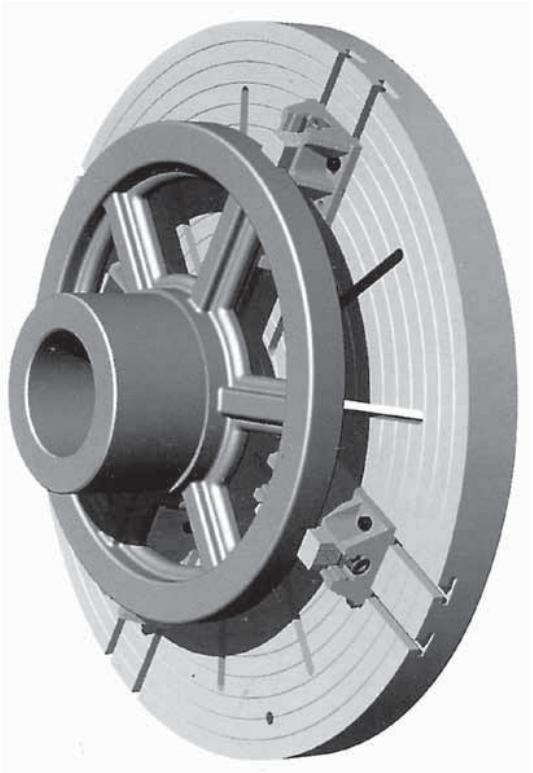

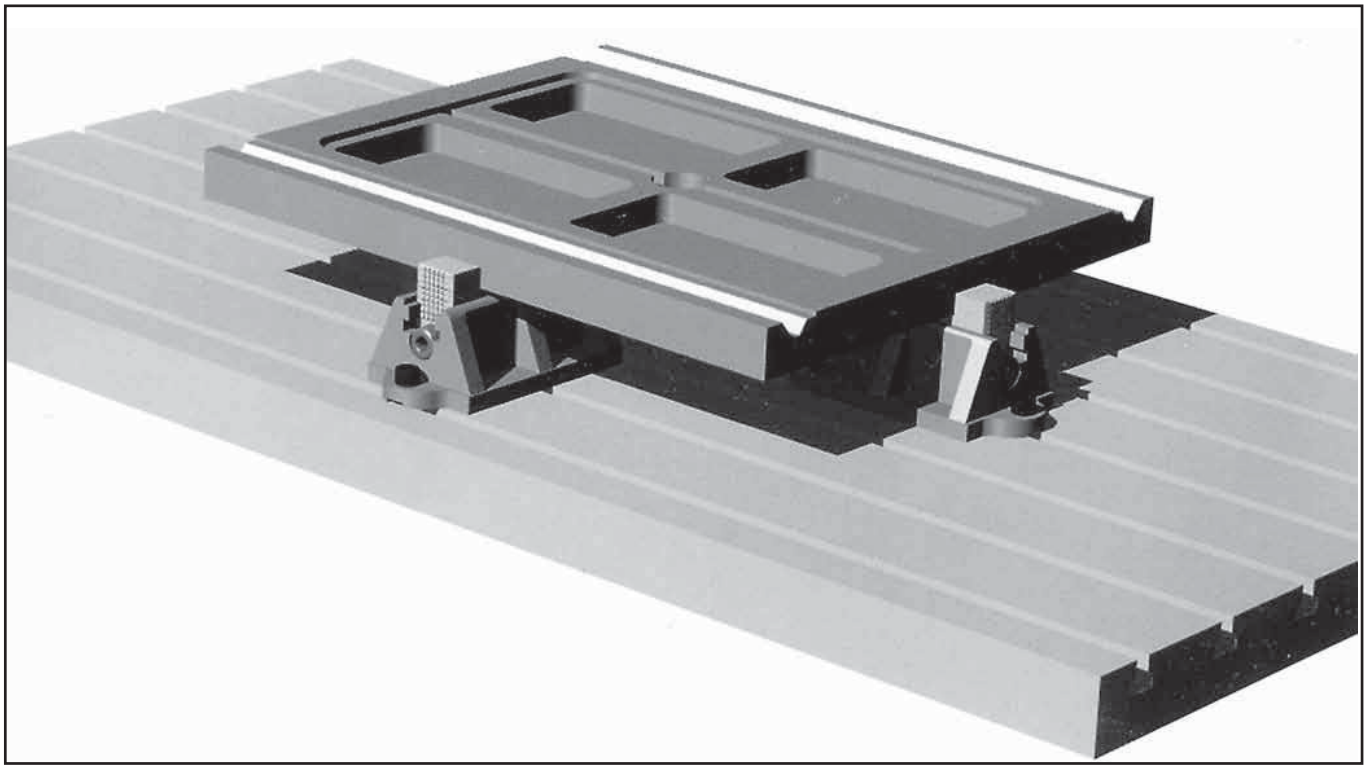

Spare Parts for Self-Centering Chucks

One Piece Jaw

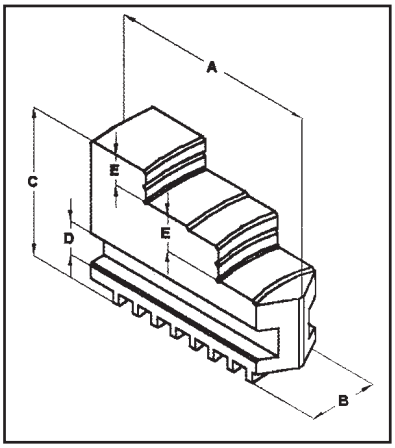

No. 1 Outside Hard Jaw

mm Ø SIZE	85 3-1/2	110 4-1/4	135 5-1/2	160 6-1/4	200 8	250 10	315 12-1/2	350 13-3/4	400 16	500 20	630 23
A mm	34	47	55	66	77	95	115	140	140	175	175
B mm	12	15	18	22	25	32	40	40	40	45	45
C mm	24.6	31.5	39.5	47.5	54.5	64.5	79.5	89.5	89.5	119.5	119.5
D mm	5	6.5	8	9	10.5	12.482	14	14	14	16	16
E mm	6	7.5	9.5	10.5	12	15	19	23.5	23.5	34	34

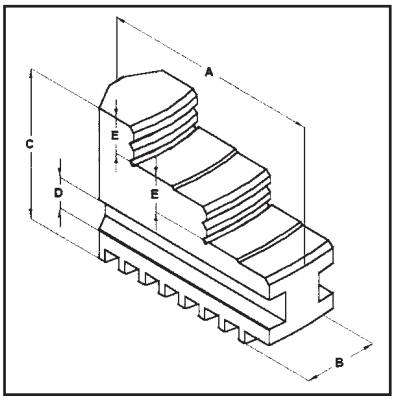

No. 2 Inside Hard Jaw

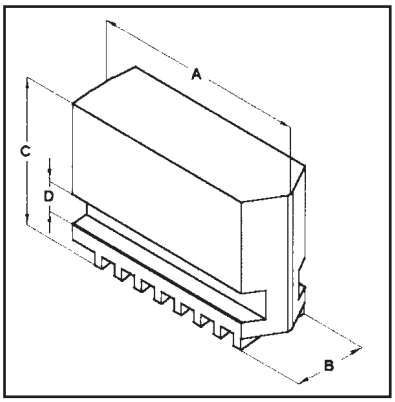

Soft Scroll Jaw

Ø SIZE			No. 1 Outside Hard Jaw	No. 2 Inside Hard Jaw	Soft Scroll Jaw	Master Base Jaw	Hard Top Jaw	Soft Top Jaw
mm	inch							
85	3-1/2	JGO.3	1GU3108500	1GU3208500	1GU3008500			
		JGO.4	1GU4108500	1GU4208500	1GU4008500			
110	4-1/4	JGO.3	1GU3111000	1GU3211000	1GU3011000			
		JGO.4	1GU4111000	1GU4211000	1GU4011000			
135	5-1/2	JGO.3	1GU3113500	1GU3213500	1GU3013500			
		JGO.4	1GU4113500	1GU4213500	1GU4013500			
160	6-1/4	JGO.3	1GU3116000	1GU3216000	1GU3016000	1GU3316000	1GU3416000	DM16
		JGO.4	1GU4116000	1GU4216000	1GU4016000	1GU4316000	1GU4416000	DM16
200	8	JGO.3	1GU3120000	1GU3220000	1GU3020000	1GU3320000	1GU3420000	DM20
		JGO.4	1GU4120000	1GU4220000	1GU4020000	1GU4320000	1GU4420000	DM20
250	10	JGO.3	1GU3125000	1GU3225000	1GU3025000	1GU3325000	1GU3425000	DM25
		JGO.4	1GU4125000	1GU4225000	1GU4025000	1GU4325000	1GU4425000	DM25
315	12-1/2	JGO.3	1GU3131500	1GU3231500	1GU3031500	1GU3331500	1GU3431500	DM32
		JGO.4	1GU4131500	1GU4231500	1GU4031500	1GU4331500	1GU4431500	DM32
350	13-3/4	JGO.3	1GU3135000	1GU3235000	1GU3035000	1GU3335000	1GU3435000	DM38
		JGO.4	1GU4135000	1GU4235000	1GU4035000	1GU4335000	1GU4435000	DM38
400	16	JGO.3	1GU3140000	1GU3240000	1GU3040000	1GU3340000	1GU3440000	DM38
		JGO.4	1GU4140000	1GU4240000	1GU4040000	1GU4340000	1GU4440000	DM38
500	20	JGO.3	1GU3150000	1GU3250000	1GU3050000	1GU3350000	1GU3450000	DM46
		JGO.4	1GU4150000	1GU4250000	1GU4050000	1GU4350000	1GU4450000	DM46
630	23	JGO.3	1GU3163000	1GU3263000	1GU3050000	1GU3363000	1GU3463000	DM46
		JGO.4	1GU4163000	1GU4263000	1GU4050000	1GU4363000	1GU4463000	DM46

Spare Parts for Self-Centering Chucks

Two Piece Jaw

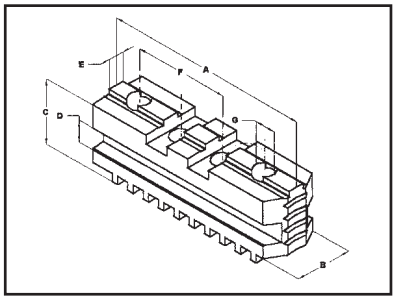

Base Jaw

Ø SIZE mm	Ø SIZE inch	A mm	B mm	C mm	D mm	E mm	F mm	G inch
160	6-1/4	65	22	30	9	12.7	38.1	3/8”-16 UNC
200	8	78	25	33.5	10.5	12.7	48.4	3/8”-16 UNC
250	10	92	32	38.25	12.5	19.05	54	1/2”-13 UNC
315	12-1/2	108	40	43.25	14	19.05	63.5	1/2”-13 UNC
350	13-1/3	127	40	47	14	19.05	76.2	5/8”-11 UNC
400	16	127	40	47	14	19.05	76.2	5/8”-11 UNC
500	20	166	45	57	16	19.05	76.2	3/4”-10 UNC
630	23	166	45	57	16	19.05	76.2	3/4”-10 UNC

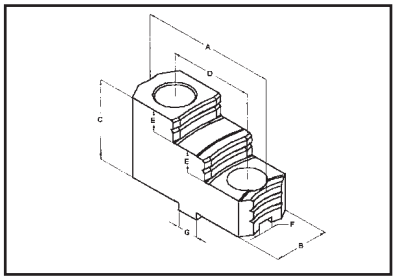

Hard Top Jaw

mm Ø SIZE	160 6-1/4	200 8	250 10	315 12-1/2	350 13-3/4	400 16	500 20	630 23
A mm	66.5	79.2	93.8	108.5	128.5	128.5	127	127
B mm	22.5	25.5	32.5	40.5	40.5	40.5	52.5	52.5
C mm	38.1	40.4	51	51	59.5	59.5	80	80
D mm	38.1	44.4	54	63.5	76.2	76.2	76.2	76.2
E mm	8	9.5	12	12	12	12	18	18
F mm	8	8	12.7	12.7	12.7	12.7	12.7	12.7
G mm	12.6	12.6	19.05	19.05	19.05	19.05	19.05	19.05

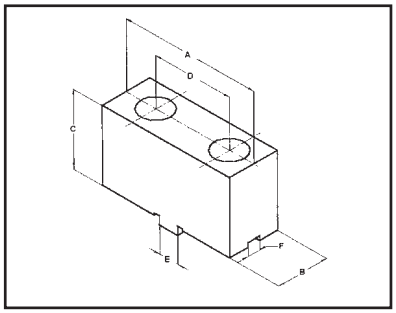

Soft Top Jaw

mm Ø SIZE	160 6-1/4	200 8	250 10	315 12-1/2	350 13-3/4	400 16	500 20	630 23
A mm	69	81	98	111	130	130	168	168
B mm	30	30	35	44.5	44.5	44.5	52.5	52.5
C mm	39.3	41.6	52.6	52.6	60.5	60.5	80	80
D mm	38.1	44.4	54	63.5	76.2	76.2	76.2	76.2
E mm	12.6	12.6	19.05	19.05	19.05	19.05	19.05	19.05
F mm	8	8	12.7	12.7	12.7	12.7	12.7	12.7

For Manual and Power Operated Chucks

AMERICAN STANDARD BASE JAWS

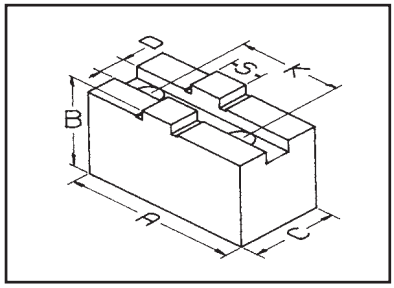

Techleader Part No.	Chuck Diameter	A	B	C	D	K	S	Bolt Size
DM13	5"	2.18"	1.37"	0.75"	0.313"	1.250"	0.436"	5/16"
DM16	6"	2.81"	1.37"	1.00"	0.313"	1.500"	0.499"	3/8"
DM16L	6"	3.25"	1.37"	1.00"	0.313"	1.500"	0.499"	3/8"
DM20	8"	3.31"	1.87"	1.25"	0.313"	1.750"	0.499"	3/8"
DM20L	8"	3.75"	1.88"	1.25"	0.313"	1.750"	0.499"	3/8"
DM25	10"	3.94"	1.87"	1.50"	0.501"	2.125"	0.749"	1/2"
DM25L	10"	4.62"	1.88"	1.50"	0.501"	2.125"	0.749"	1/2"
DM32	12"	4.50"	2.12"	1.75"	0.501"	2.500"	0.749"	1/2"
DM32L	12"	5.37"	2.13"	1.75"	0.501"	2.500"	0.749"	1/2"
DM38	15"	5.18"	2.25"	1.75"	0.501"	3.000"	0.749"	5/8"
DM38L	15"	6.25"	2.25"	1.75"	0.501"	3.000"	0.749"	5/8"
DM46	18"	5.18"	2.75"	2.25"	0.501"	3.000"	0.749"	3/4"
DM46L	18"	6.37"	2.75"	2.25"	0.501"	3.000"	0.749"	3/4"

Spare Parts for Self-Centering Chucks

Scroll

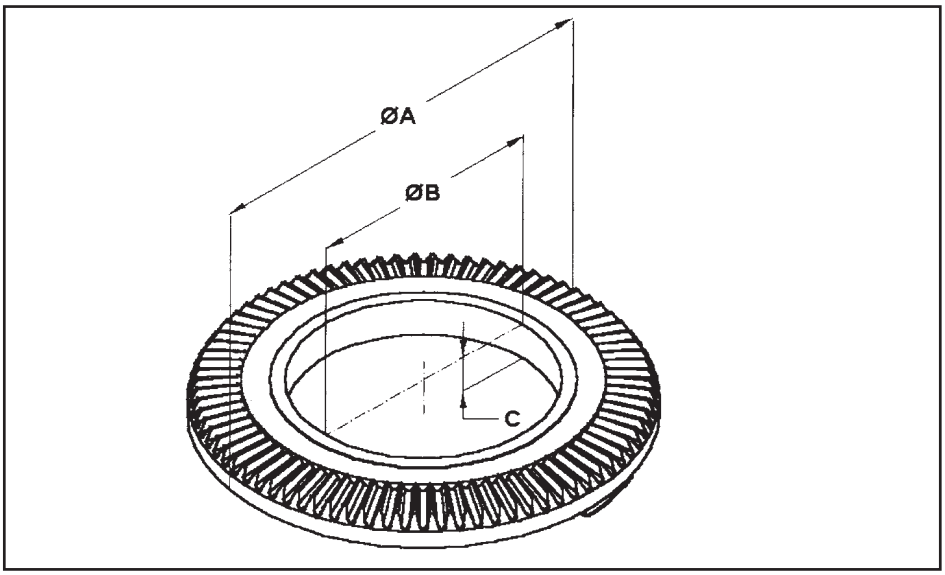

Ø SIZE mm	Ø SIZE inch	Ø A mm	Ø B mm	C mm	E mm	F mm	G mm	Ø D mm	CODE SCROLL	CODE PINION
85	3-1/2	61.2	34	11.61	31	20	6 X 6	5	2C00008500	2PN0008500
110	4-1/4	85	48	14.35	37.2	25	8 X 8	8	2C00011000	2PN0011000
135	5-1/2	102	60	16.9	44.3	28	10 X 10	9	2C00013500	2PN0013500
160	6-1/4	124.2	78	16.3	47	30	12 X 12	10	2C00016000	2PN0016000
200	8	158.5	101	19.8	58.1	32	12 X1 2	11.5	2C00020000	2PN0020000
250	10	201.2	118	23.5	81.5	35	14 X 14	14	2C00025000	2PN0025000
315	12-1/2	257	138	34.1	104.9	40	14 X 14	18	2C00031500	2PN0031500
350	13-3/4	289	190	27	91	40	14 X 14	18	2C00035000	2PN0035000
400	16	318	175	39	130.5	45	17 X 17	20	2C00040000	2PN0040000
500	20	398	220	51	162.1	50	19 X 19	22	2C00050000	2PN0050000
630	23	542.5	275	50	196	50	19 X \19	22	2C00063000	2PN0063000

Pinion

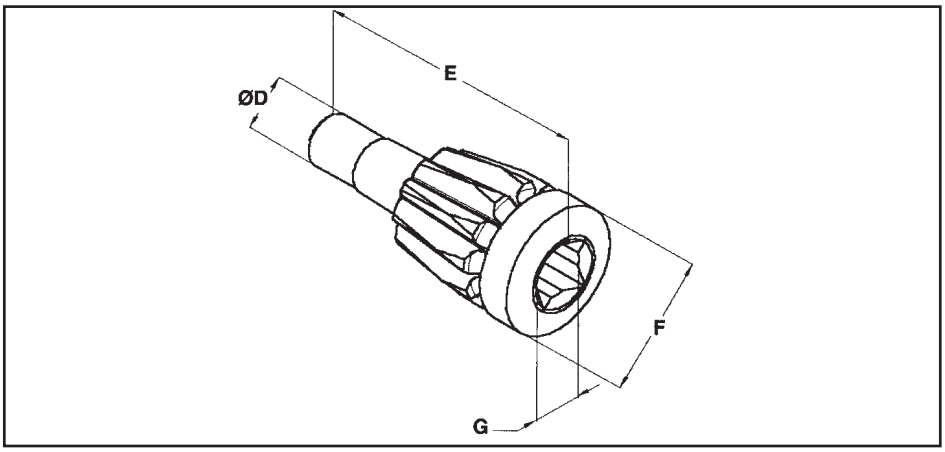

Spare Parts for Self-Centering Chucks

Chuck Key

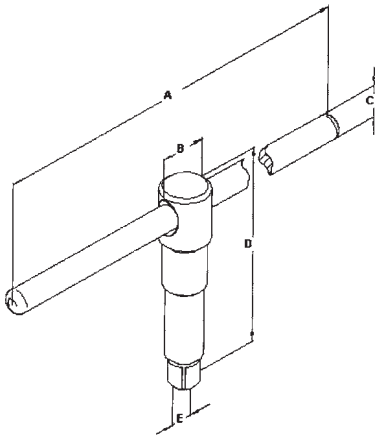

Ø SIZE mm	Ø SIZE inch	A mm	Ø B mm	D mm	E mm	Chuck Key Order No.
85	3-1/2	100	14	70	6 X 6	1LL0008500
110	4-1/4	125	18	85	8 X 8	1LL0011000
135	5-1/2	150	22	85	10 X 10	1LL0013500
160	6-1/4	180	22	100	12 X 12	1LL0016000
200	8	210	22	100	12 X 12	1LL0020000
250	10	250	25	134	14 X 14	1LL0025000
315	12-1/2	315	25	134	14 X 14	1LL0031500
350	13-3/4	315	25	134	14 X 14	1LL0030000
400	16	400	30	160	17 X 17	1LL0040000
500	20	500	32	160	19 X 19	1LL0050000
630	23	500	32	160	19 X 19	1LL0063000

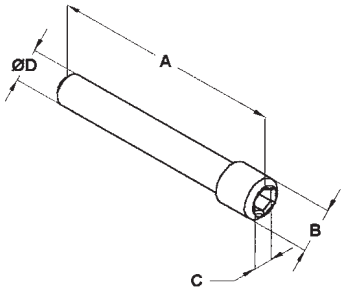

Pinion Retainer

Ø SIZE mm	Ø SIZE inch	A mm	Ø B mm	D mm	E mm	Pinion Retainer Order No.
85	3-1/2	34	M6	3	4	2BU0300600
110	4-1/4	34	M6	3	4	2BU0300600
135	5-1/2	34	M6	3	4	2BU0300600
160	6-1/4	38	M6	3	4	2BU0300600
200	8	49	M8	4	6	2BU0300800
250	10	49	M8	4	6	2BU0300800
315	12-1/2	62	M12	6	9	2BU0301200
350	13-3/4	62	M12	6	9	2BU0301200
400	16	62	M12	6	9	2BU0301200
500	20	62	M12	6	9	2BU0301200
630	23	62	M12	6	9	2BU0301200

Spare Parts for 4 Jaw Independent Chucks

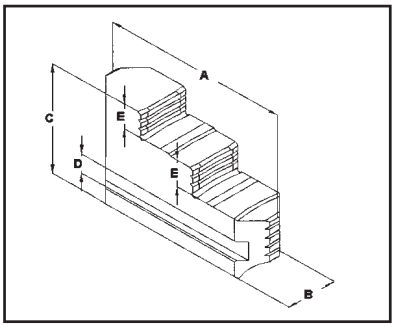

Hard Reversible Jaw

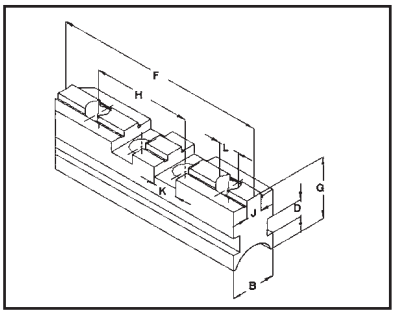

Master Base Jaw

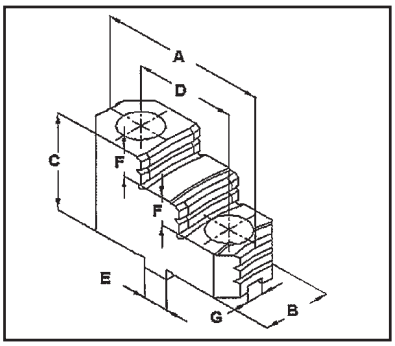

Hard Top Jaw

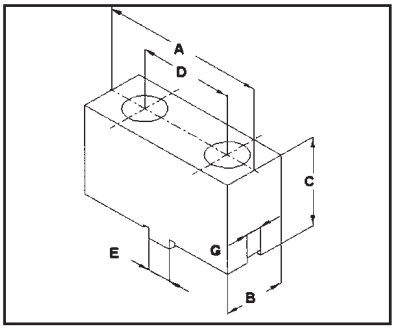

Soft Top Jaw

Ø SIZE mm	Ø SIZE inch	A mm	B mm	C mm	D mm	E mm	F mm	G mm	H mm	J mm	K mm	L inch	Hard Reversible Jaw	Master Base Jaw
160	6	56	19.4	52	9.25	9	-	-	-	-	-	-	1GI0116000	-
200	8	75	19.4	57	9.25	10	-	-	-	-	-	-	1GI0120000	-
250	10	87.5	30	58	10	11	-	-	-	-	-	-	1GI0125000	-
300	12	87.5	30	58	10	11	-	-	-	-	-	-	1GI0125000	-
350	14	106	35	76	13	16	127	45.5	76.2	12.7	19.05	5/8-11x2	1GI0135000	1GI335000
400	16	106	35	76	13	16	127	45.5	76.2	12.7	19.05	5/8-11x2	1GI0135000	1GI335000
450	18	125	35	76	13	16	165	45.5	76.2	12.7	19.05	3/4-10x4	1GI0145000	1GI345000
500	20	125	35	76	13	16	165	45.5	76.2	12.7	19.05	3/4-10x4	1GI0145000	1GI345000
600	24	175	50	130	18	34	175	53.5	76.2	12.7	19.05	3/4-10x4	1GI0160000	1GI360000
700	28	175	50	130	18	34	175	53.5	76.2	12.7	19.05	3/4-10x4	1GI0160000	1GI360000
800	32	175	50	130	18	34	175	53.5	76.2	12.7	19.05	3/4-10x4	1GI0160000	1GI360000
900	36	175	50	130	18	34	175	53.5	76.2	12.7	19.05	3/4-10x4	1GI0160000	1GI360000
1000	40	200	60	130	18	34	203	54.5	76.2	12.7	19.05	3/4-10x5	1GI0101000	1GI301000
1200	48	200	60	130	18	34	203	54.5	76.2	12.7	19.05	3/4-10x5	1GI0101000	1GI301000
1400	56	200	60	130	18	34	203	54.5	76.2	12.7	19.05	3/4-10x5	1GI0101000	1GI301000
1500	60	200	60	130	18	34	203	54.5	76.2	12.7	19.05	3/4-10x5	1GI0101000	1GI301000

Ø SIZE mm	Ø SIZE inch	A mm	B mm	C mm	D mm	E mm	F mm	G mm	HARD TOP JAW	SOFT TOP JAW
350	14	127	40	58	76.2	19.05	15	12.7	1GI0435000	DM38
400	16	127	40	58	76.2	19.05	15	12.7	1GI0435000	DM38
450	18	127	40	73	76.2	19.05	20	12.7	1GI0445000	DM46
500	20	127	40	73	76.2	19.05	20	12.7	1GI0445000	DM46
600	24	127	61	74	76.2	19.05	20	12.7	1GI0460000	DM46
700	28	127	61	74	76.2	19.05	20	12.7	1GI0460000	DM460
800	32	127	61	74	76.2	19.05	20	12.7	1GI0460000	DM46
900	36	127	61	74	76.2	19.05	20	12.7	1GI0460000	DM46
1000	40	127	61	74	76.2	19.05	20	12.7	1GI0460000	DM46
1200	48	127	61	74	76.2	19.05	20	12.7	1GI0460000	DM46
1400	56	127	61	74	76.2	19.05	20	12.7	1GI0460000	DM46
1500	60	127	61	74	76.2	19.05	20	12.7	1GI0460000	DM46

Spare Parts for 4 Jaw Independent Chucks

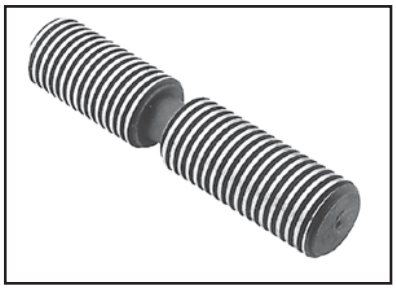

Operating Screw

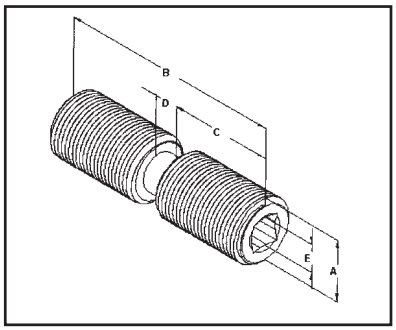

Operating Screw

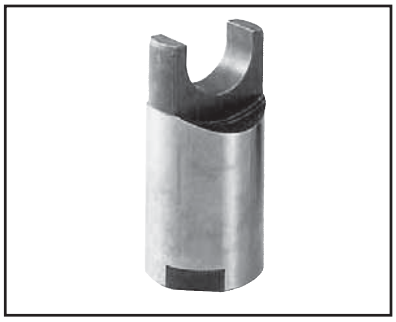

Thrust Bearing

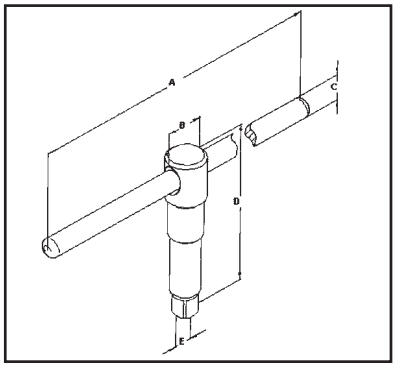

Chuck Key

Ø SIZE mm	Ø SIZE inch	A	B	C	D	E	G	H	OPERATING SCREW	THRUST BEARING
160	6	22	52	23	6	10	28.75	11.5	2HU2200100	2TC0000100
200	8	22	63	28.5	6	10	36	11.5	2HU2200200	2TC0000200
250	10	32	74	31	12	14	42.5	18.5	2HU3200100	2TC0000300
300	12	32	92	40	12	14	42.5	18.5	2HU3200200	2TC0000300
350	14	32	113	50.5	12	14	42.5	18.5	2HU3200300	2TC0000300
400	16	32	127	57.5	12	14	42.5	18.5	2HU3200400	2TC0000300
450	18	32	152	70	12	14	42.5	18.5	2HU3200500	2TC0000300
500	20	32	178	83	12	14	42.5	18.5	2HU3200600	2TC0000300
600	24	40	208	96	16	17	51	23	2HU4000100	2TC0000400
700	28	40	243	126	16	17	51	23	2HU4000200	2TC0000400
800	32	40	268	126	16	17	51	23	2HU4000300	2TC0000400
900	36	40	323	153.5	16	17	51	23	2HU4000400	2TC0000400
1000	40	40	360	172	16	17	51	23	2HU4000500	2TC0000400
1200	48	40	405	127	19	19	70	32	2HU4000700	2TC0000400
1200	56	40	500	154	19	19	70	32	2HU4000900	2TC0000400
1500	60	40	615	176.5	19	19	70	32	2HU4001000	2TC0000400

Ø SIZE mm	Ø SIZE inch	A	B	C	D	E	CHUCK KEY
160	6	200	20	10	118	10	1LL0116000
200	8	200	20	10	118	10	1LL0120000
250	10	250	30	15	135	14	1LL0125000
300	12	250	30	15	135	14	1LL0130000
350	14	350	30	15	180	14	1LL0135000
400	16	350	30	15	180	14	1LL0140000
450	18	400	30	15	180	14	1LL0145000
500	20	400	30	15	180	14	1LL0150000
600	24	600	38	18	258	17	1LL0160000
700	28	600	38	18	258	17	1LL0160000
800	32	600	38	18	258	17	1LL0160000
900	36	600	38	18	258	17	1LL0160000
1000	40	800	38	18	258	17	1LL0101000
1200	48	800	38	18	228	19	1LL0101000
1400	56	800	38	18	228	19	1LL0101000
1500	60	800	38	18	228	19	1LL0101000

Spindle Mountings

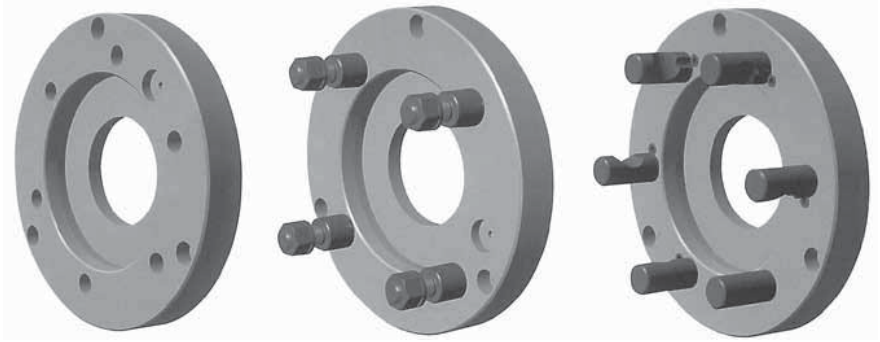

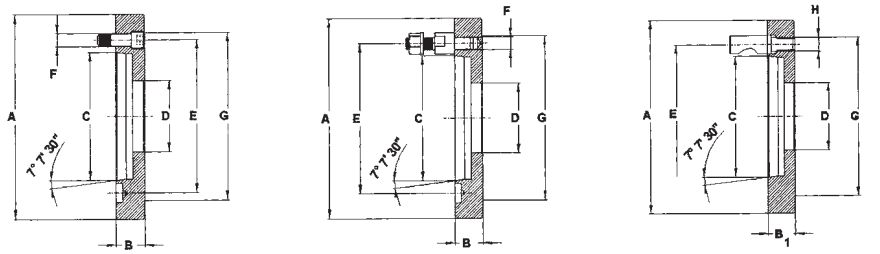

DIN 55026
ASA B5.9 (A1-A2)

DIN 55027

DIN 55029
CAMLOCK

SIZES

Short Taper	3”	4”	5”	6”	8”	11”	15”
A	110/135	110/135/160	135/160/200	200/250/315	250/315/350/400	350/400/500/630	400/500/630
B	22/22	20/25	20/25/25	25/30/35	35/35/35/35	36/36/40/45	36/40/45
B1	24/24	24/24/25	27/27/27	32/32/32	31/35/35/36	42/42/45/45	42/45/48
C	53.985	63.525	82.575	106.39	139.735	196.885	285.79
D	51.5	61	79.6	103.2	136.2	192.9	281.3
F	11/M-10	11/M-10	11/M-10	13/M-12	17/M-16	21/M-20	25/M-24
E	75	85	104.8	133.4	171.4	235	330.2
H	7/16”-20	7/16”-20	1/2”-20	5/8”-18	3/4”-16	7/8”-14	1”-12
Nº screws DIN 55026	3	3	4	4	4	6	6
Nº bolts DIN 55027	3	3	4	4	4	6	6
Lock nuts CAMLOCK Studs	3	3	6	6	6	6	6

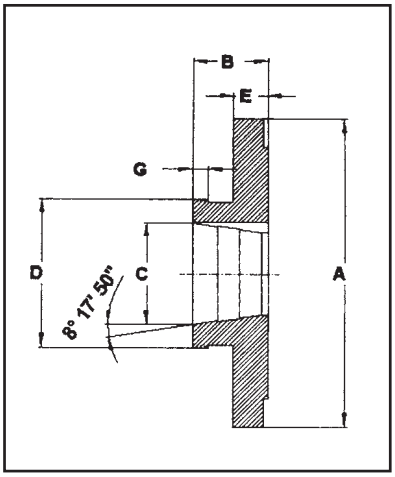

Long Tapper

SIZES

Long Taper	L00	L0	L1	L2
A	160/200/250	160/200/250	200/325/400/250/350/500	250/350/315/400/500
B	54	63.5	76.2	88.9
C	69.85	82.65	104.775	133.35
D	3 3/4-6 UNS	4 1/2-6 UNS	6-6 UNS	7 3/4-5 UNS
E	23.5	23.5	23.5	23.5
Coter	9.59	9.59	15.925	19.1
G	14.287	14.287	15.875	22.225

TECHLEADER® TOOLING INC.

Adapter Plates

Adapter With No Recess

Adapter With Recess

Ø SIZE		DIN55029		DIN55026		DIN 55027	
BODY		FLAT	RECESS	FLAT	RECESS	FLAT	RECESS
mm	inch						
160	6-1/4 4”	2CP4216000	2CP4216001	2CP1216000	2CP1216001	2CP2216000	2CP2216001
	5”	2CP4316000	2CP4316001	2CP1316000	2CP1316001	2CP2316000	2CP2316001
	6”	2CP4416000	2CP4416001	2CP1416000	2CP1416001	2CP2416000	2CP2416001
200	8 4”	2CP4220000	2CP4220001	2CP1220000	2CP1220001	2CP2220000	2CP2220001
	5”	2CP4320000	2CP4320001	2CP1320000	2CP1320001	2CP2320000	2CP2320001
	6”	2CP4420000	2CP4420001	2CP1420000	2CP1420001	2CP2420000	2CP2420001
250	10 5”	2CP4325000	2CP4325001	2CP1325000	2CP1325001	2CP2325000	2CP2325001
	6”	2CP4425000	2CP4425001	2CP1425000	2CP1425001	2CP2425000	2CP2425001
	8”	2CP4525000	2CP4525001	2CP1525000	2CP1525001	2CP2525000	2CP2525001
315	12-1/2 6”	2CP4431500	2CP4431501	2CP1431500	2CP1431501	2CP2431500	2CP2431501
	8”	2CP4531500	2CP4531501	2CP1531500	2CP1531501	2CP2531500	2CP2531501
	11”	2CP4631500	2CP4631501	2CP1631500	2CP1631501	2CP2631500	2CP2631501
350	14 6”	2CP4435000	2CP4435001	2CP1435000	2CP1435001	2CP2435000	2CP2435001
	8”	2CP4535000	2CP4535001	2CP1535000	2CP1535001	2CP2535000	2CP2535001
	11”	2CP4635000	2CP4635001	2CP1635000	2CP1635001	2CP2635000	2CP2635001
	15”	2CP4635000	2CP4635001	2CP1635000	2CP1635001	2CP2635000	2CP2635001
400	16 6”	2CP4440000	1GU3240000	2CP1440000	2CP1440001	2CP2440000	2CP2440001
	8”	2CP4540000	1GU4240000	2CP1540000	2CP1540001	2CP2540000	2CP2540001
	11”	2CP4640000	2CP4640001	2CP1640000	2CP1640001	2CP2640000	2CP2640001
	15”	2CP4740000	2CP4740001	2CP1740000	2CP1740001	2CP2740000	2CP2740001
500	20 6”	2CP4450000	2CP4450001	2CP1450000	2CP1450001	2CP2450000	2CP2450001
	8”	2CP4550000	2CP4550001	2CP1550000	2CP1550001	2CP2550000	2CP2550001
	11”	2CP4650000	2CP4650001	2CP1650000	2CP1650001	2CP2650000	2CP2650001
	15”	2CP4750000	2CP4750001	2CP1750000	2CP1750001	2CP2750000	2CP2750001
630	24 8”	2CP4563000	2CP4563001	2CP1563000	2CP1563001	2CP2563000	2CP2563001
	11”	2CP4663000	2CP4663001	2CP1663000	2CP1663001	2CP2663000	2CP2663001
	15”	2CP4763000	2CP4763001	2CP1763000	2CP1763001	2CP2763000	2CP2763001

Studs

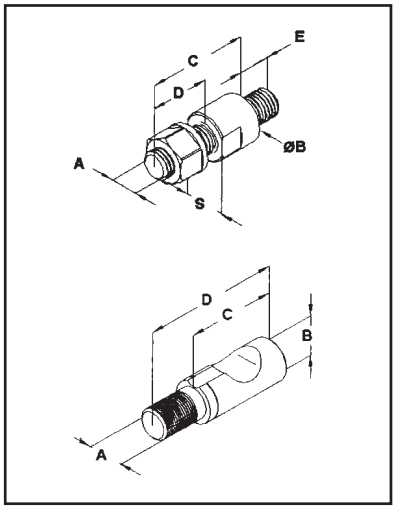

Short Taper	3” 3	4” 3	5” 4	6” 4	8” 4	11” 6	15” 6
A	M-10	M-10	M-10	M-12	M-16	M-20	M-24
B	19.5	19.5	19.5	21.5	27	34	41
C	34	39	43	50	60	75	90
D	20	22	24	28	35	44	52
E	12	12	12	15	20	25	30
S	17	17	17	19	24	30	36

Short Taper	3” 3	4” 3	5” 4	6” 4	8” 4	11” 6	15” 6
A	7/16”-20	7/16”-20	1/2”-20	5/8”-18	3/4”-16	7/8”-14	1”-12
B	14.3	15.8	19	22.2	25.4	30.1	34.9
C	34.9	36.5	42.8	49.2	55.5	66.7	76
D	54	55.5	65	76.2	85.7	101.6	116
S	1/4”x12.7	1/4”x12.7	1/4”x12.7	5/16”x15.9	5/16”x15.9	5/16”x15.9	5/16”x15.9

TECHLEADER® TOOLING INC.

GIANNI SUFFRITI

Milling Vises

Milling Vises

Precision Vises for Milling machines Long lasting precision

These machine vises are especially suited for use on machining centers & high-precision machinery. The sturdy, robust steel body ensures precision clamping.

Made In Italy

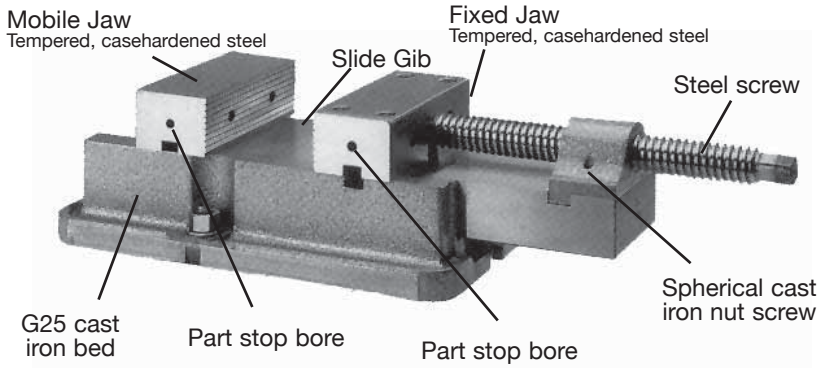

Benefits

- G26 cast iron body with high deformity resistance
- High clamping precision
- May be fastened using screws in the bores provided or with traditional brackets
- Extremely simple to position using the tooled side rests. Two gauged bores on the base may be provided upon request
- Rapid aperture adjustment
- Large capacity
- Long mobile jaw guide
- Ground jaw surface for precise alignment checking
- Parallel-ground jaws
- All parts subject to wear, especially the guide gib for the body, are hardened and ground to ensure a long life-span

RC Vises were created for precision tooling, with features that allow a secure lock even in high-strain tooling situations. The bed is made of highly resistant G26 pearlitic cast iron, and the rest is entirely tempered, case hardened steel. The two parts interlock with high-precision grinding tolerances, so that the two materials can virtually last forever. The vises include bores for mounting V-type jaws for cylindrical materials, or the knurled jaws for raw materials.

Application
the myriad potential applications for these vises make excellent for use on all traditional machines such as mills, grinders, bong machines, sharpeners, drills, etc. Their advantages can be especially appreciated on CNC machining centers.

Gripping tolerances
The high piece gripping precision and solidity of the grip make RC Vises an essential product for working on machine tools, with a long life-span.

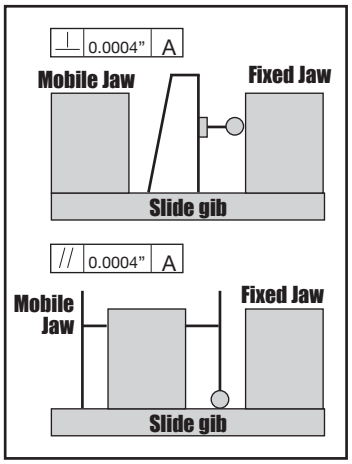

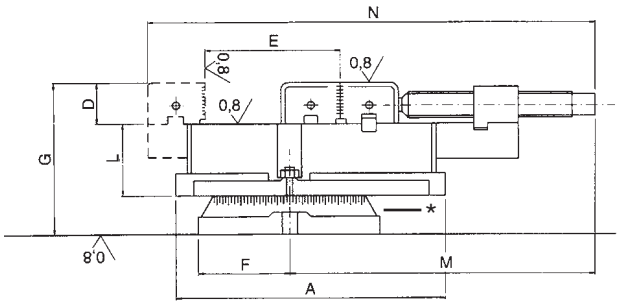

* Vise shown with optional swivel base attached

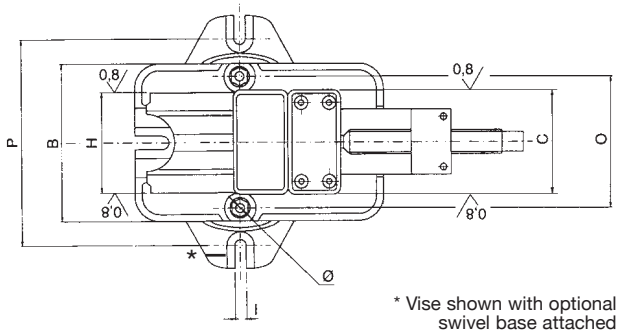

* Vise shown with optional swivel base attached

	Vise Specifications														
Model order #	useful max opening	Jaw length	Jaw height	weight		total height	total length	bed	swivel base (optional)		bed attachment bores		attachment references		bearing face length
	E	C	D	vise	swivel	G	N	B x A x L	P	I	O	Ø	F	M	H
E300	310mm 12.20"	190mm 7.50"	59mm 2.32"	60 KG 132 lbs	13 KG 28.60 lbs	189mm 7.44"	820mm 32.28"	242 x 450 x 89mm 9.53" x 17.72" x 3.50"	305mm 12.00"	18.5mm 0.728"	203mm 7.99"	18mm 0.708"	170mm 6.69"	620mm 24.40"	170mm 6.69"
B200	210mm 8.26"	145mm 5.70"	48mm 1.87"	37 KG 81 lbs	8 KG 17.60 lbs	165mm 6.50"	638mm 25.11"	198 x 356 x 79 mm 7.80" x 14.01" x 3.1"	260mm 10.24"	17.5mm 0.688"	150mm 5.90"	16.5mm 0.649"	105mm 4.13"	450mm 17.71"	140mm 5.51"

TECHLEADER® TOOLING INC.

ERON®

Lock-Tight 5 Axis Machine Vises

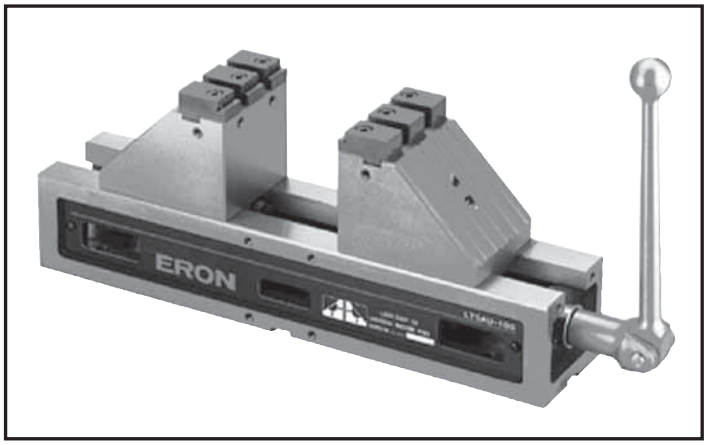

Compact Machine vises for 5 axis machines.

Features

- Deep jaw construction, free of interference with the machine as the work pieces can be clamped at higher level, less interference of cutting tools.
- Built in semi-sphere segment mechanism which minimizes the jaw lifting under clamping pressure.
- Exchangeable jaw plates
  1 set of serrated jaw plates on both jaws.

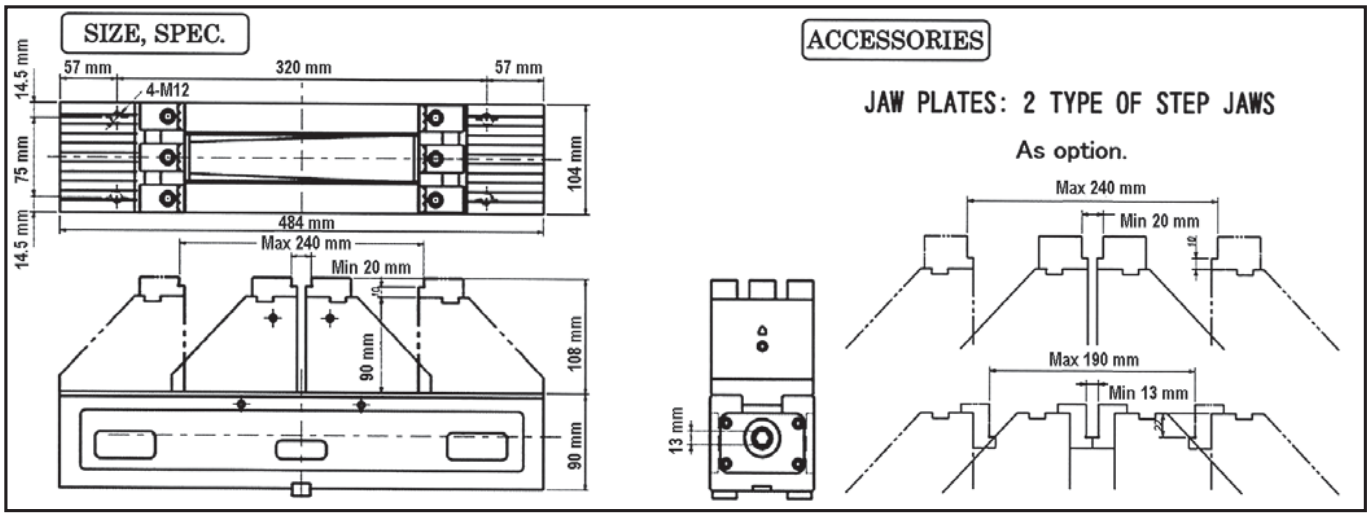

LESS INTERFERENCE W/MACHINE

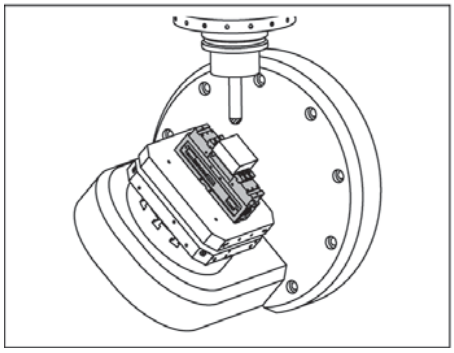

BUILT IN SEMI-SPHERE MECHANISM TO MINIMIZE JAW LIFTING

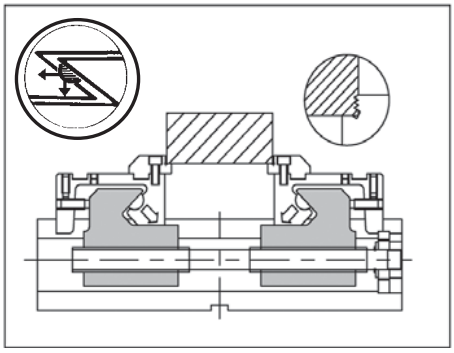

JAW EXCHANGEABLE

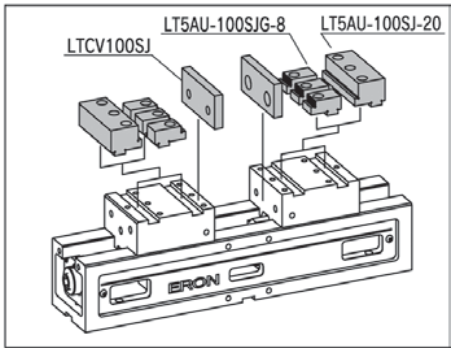

Order No.	Model No.	Total Length	Jaw Width	Jaw Width	Total Height	Weight	Clamping Force
595-225	LT5AU-100	484 mm	102 mm	240 mm	198 mm	32 Kg	20 KN

TECHLEADER® TOOLING INC.

ERON®

Lock-Tight Hydraulic Machine Vises MKIII

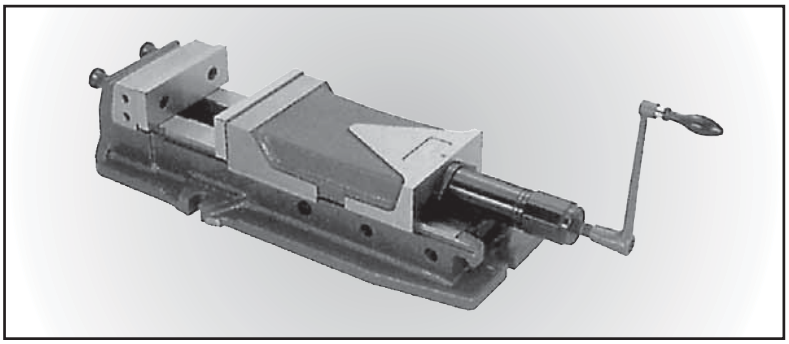

Made in Japan

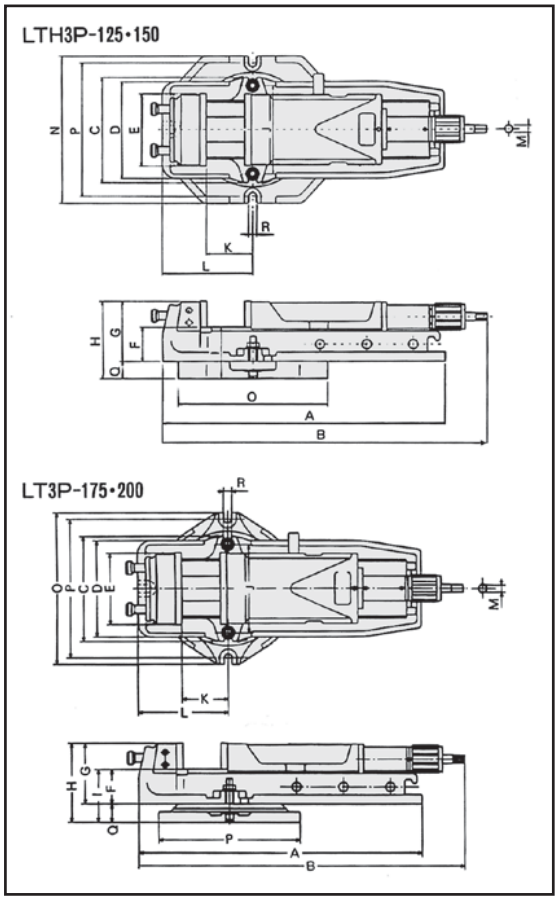

Features

- Down thrust 'Semisphere Segment' eliminates jaw lift and work tilt.
- Vise body made of ductile iron (tensile strength 60 kgs mm or 80,000 psi). All surface ground. Vise bed flame-hardened.
- Easier change of mode by original clutch mechanism.
- Bolts for lifting.

SIZE

Order No.	Device Type	A mm	B mm	C mm	D mm	E mm	F mm	G mm	H mm
595-125	LTH3P-125	510	564-789	187	178	129	67	121	153
595-150	LTH3P-150	605	618-933	230	210	156	75	132	170

Order No.	Device Type	I mm	J mm	K mm	L mm	M mm	N mm	O mm	P mm	Q mm	R mm
595-125	LTH3P-125	99	157	71	155	16	283	270	255	32	15
595-150	LTH3P-150	113	192	101	195	16	334	320	304	38	38

SPEC

Order No.	Device Type	Jaw Width mm	Jaw Depth mm	Jaw Opening mm	Key Blocks mm	Clamping Force (kgf)	Weight (kgs)
595-125	LTH3P-125	129	54	225	16	3000	32
595-150	LTH3P-150	156	57	315	16	4000	48

TECHLEADER® TOOLING INC.

GERARDI THE ORIGINAL

Standard Modular Vises

Gerardi Precision Modular Vises

Accuracy within 0.02 mm/0.0008 inches

Manufactured under rigid quality control. Only the most suitable materials are used, and the accuracy of even the smallest components is assured.

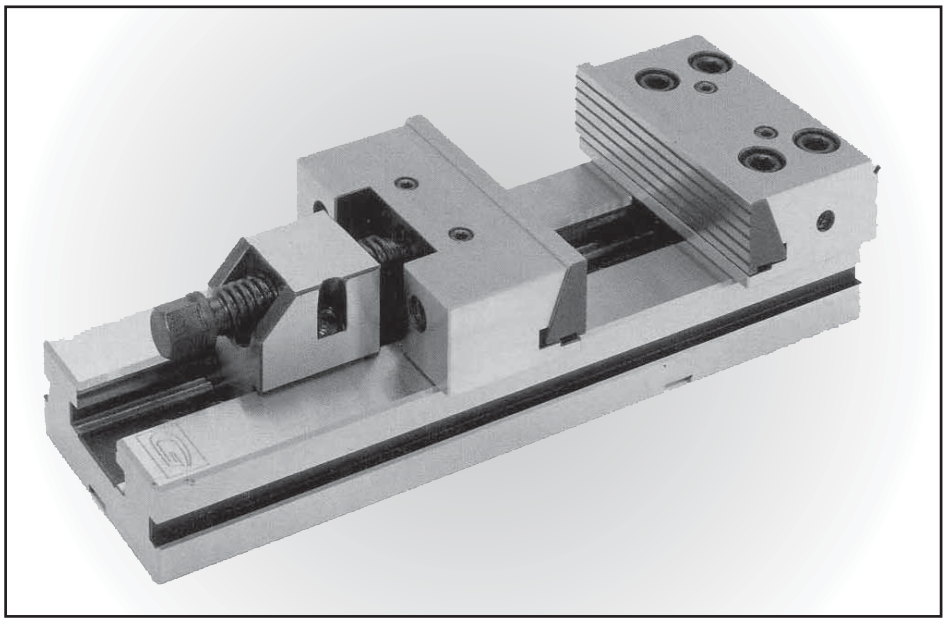

As a result of the high standard construction GERARDI vises can maintain their accuracy under the most severe operating conditions. Hardened and Ground steel construction throughout, they max your machine performance because they allow: bigger clamping power, bigger cutting performances, total exclusion of vibrations, lower tool wear and higher precision during machine work. The modular design and the concept of inter-changeability makes possible a wide variety of set up combination and solutions.

All GERARDI vises are modular and the components of all our vises will interchange with perfect alignment. The vises can be matched side to side with the highest precision and minimum of set up times thanks to many fixed reference points. All this is possible thanks to the high precision of the vise particularly as regards: the high of the base, alignment with longitudinal key-nuts with respect to the fixed jaw, the perpendicularly of the fixed jaw with respect to the vise base and the parallelism of the base top and bottom surfaces. Those features allows us to solve the most varied and complicated problems of clamping in a few seconds with the use of more vises.

The GERARDI precision modular vise is successful thanks not only to the high accuracy, but also because of the unlimited variety of combinations and versatility.

1. The floating movable jaw allows a fast and safety clamping for rough pieces not perfectly parallels. GERARDI precision modular vise in the standard version is supplied with the guided movable jaw running parallel along the whole vise body axis.
2. The fixed jaw can be turned around 180 degrees and its back 5x5 mm step matches with centesimal accuracy to the prismatic jaw step, in this way the maximum vice opening is increased.
3. Jaw plates manufactured with a pull-down angle, ensure, during the clamping operation, a downward run of the work piece against the vise vase (by dragging).
4. The compact rack blocking system, allows mechanic hydraulic and pneumatic clamping even automatic, with simply fitting the winched/needed blocking device; this operation takes only a few seconds.
5. The swivel base with positioning pin for perfect alignment; using the sine bar principle permits setting of angles quickly and accurately with gage blocks. The vise could be positioned on the swivel base along its whole axis.
6. The vise base is made from a solid steel bar, hardened HRC60 and perfectly ground with centesimal tolerances.

TECHLEADER® TOOLING INC.

GERARDI THE ORIGINAL

Standard Modular Vises

Gerardi Precision Modular Vises

All vises include as standard equipment: Workstop, positioning key nuts, box wrench, movable jaws supplied as either floating or guided – no extra charge

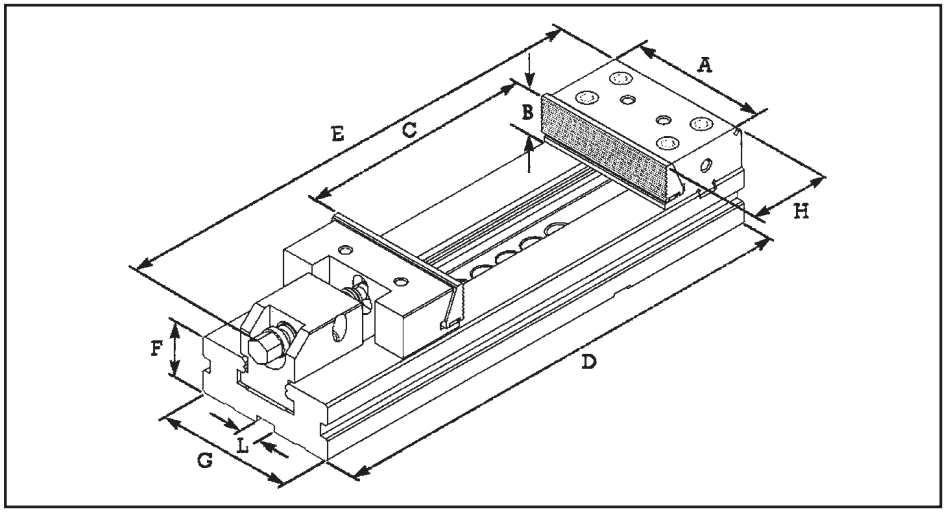

Model number	Order number	A mm	B mm	C mm	D mm	E mm	F mm	G mm	H mm	L mm	KG
1	301-00000	100	30	100	270	320	35	75	77.9	16	6.8
2	302-10000	125	40	150	345	410	40	95	77.9	16	12.9
3	303-20000	150	50	200	420	500	50	125	89.4	16	25.5
3	303-30000	150	50	300	520	600	50	125	89.4	16	29
4	304-20000	175	60	200	455	530	58	145	96.9	16	37
4	304-30000	175	60	300	555	630	58	145	96.9	16	42
4	304-40000	175	60	400	655	730	58	145	96.9	16	47
4	304-50000	175	60	500	755	830	58	145	96.9	16	52
5	305-20000	200	65	200	495	580	70	170	113.4	16	64
5	305-30000	200	65	300	595	680	70	170	113.4	16	69
5	305-40000	200	65	400	695	780	70	170	113.4	16	74
5	305-50000	200	65	500	795	880	70	170	113.4	16	79
5	305-60000	200	65	600	895	980	70	170	113.4	16	84
6	306-20000	300	80	200	535	630	78	195	120.4	16	95
6	306-30000	300	80	300	635	730	78	195	120.4	16	105
6	306-40000	300	80	400	735	830	78	195	120.4	16	115
6	306-50000	300	80	500	835	930	78	195	120.4	16	125
6	306-60000	300	80	600	935	1030	78	195	120.4	16	135
6	306-70000	300	80	700	1035	1130	78	195	120.4	16	145
6	306-80000	300	80	800	1135	1230	78	195	120.4	16	155

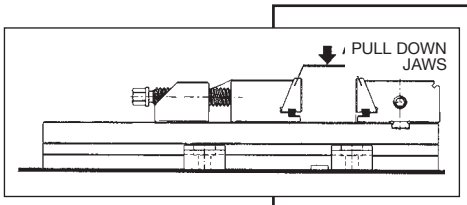

INSTRUCTIONS
Before using the vises, wishing to use the downward jaw option, loosen the screws part 381 and 382 of one quarter of a turn in order to allow jaw plates part 230-236 to run from top to bottom obtaining a downward clamping which holds work piece flat and parallel against the vise base.

TO CLAMP A QUARTER OF A TURN OF THE BOX WRENCH part 375 IS ENOUGH TO EASILY REACH 3,000-4,000 kg BLOCKING FORCE

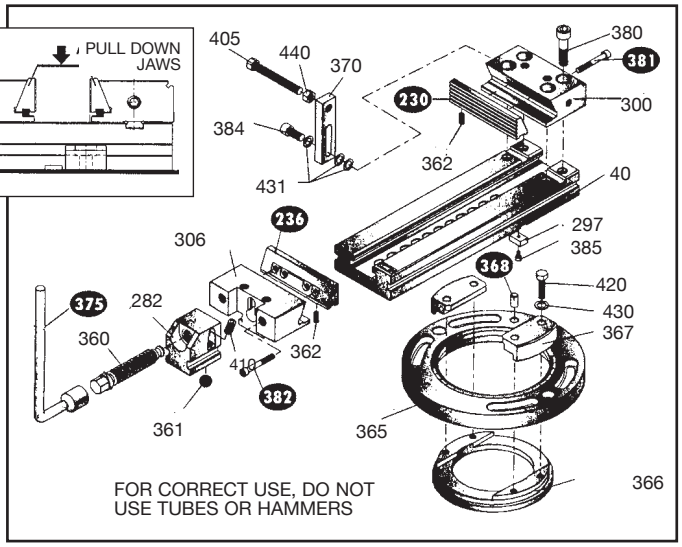

FOR CORRECT USE, DO NOT USE TUBES OR HAMMERS

TECHLEADER® TOOLING INC.

MC Hydraulic & Angle Lock Vise

MODEL: BHV

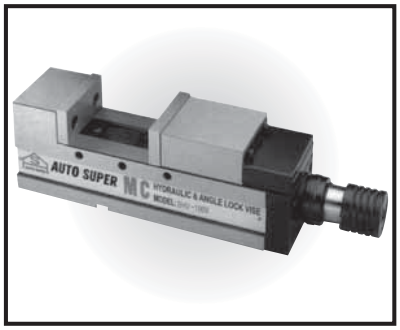

Features

1. One piece casting of vise bed and flexed jaw.
2. Down thrust "Semis-sphere Segment" mechanism-eliminates jaw life and work tilt.
3. Rigid material-vise body of iron FCD60JIS (equal to GGG60) with 60 kgs/mm^2 or 80,000 psi tensile strength.
4. Vise bed flame with harden treatment up to HRC 45º and up takes up wear and maintain for long.

Accuracy Testing Standard

NO.	ITEM	JIS Grade 1	Guaranteed
1	Vise side-lock on bottom slide way square	0.020 100 mm	0.010mm/0.0004" 100 mm
2	Keyways on bottom of vise bed square to clamping surface of jaw plate	0.020 100 mm	0.015mm/0.0006" 100 mm
3	Both jaw plate parallel	0.050 100 mm	0.020mm/0.0008" 100 mm
4	Max opening test block parallel to bottom of Vise body	0.050 100 mm	0.030mm/0.0012" 100 mm
5	Top of rectangular test block clamped tightly by jaw parallel to bottom of vise body	0.030 100 mm	0.020mm/0.0008" 100 mm
6	Surface of vise bed parallel to bottom of vise body	0.020 100 mm	0.015mm/0.0006" 100 mm

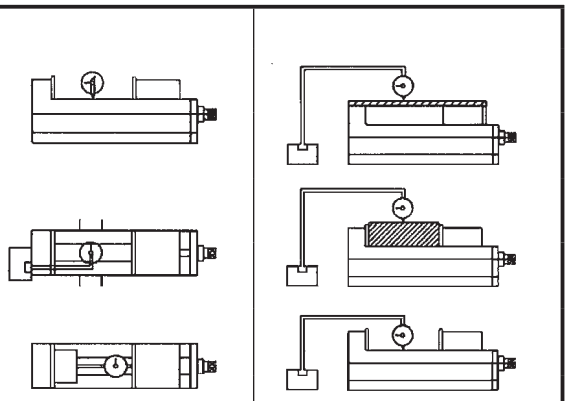

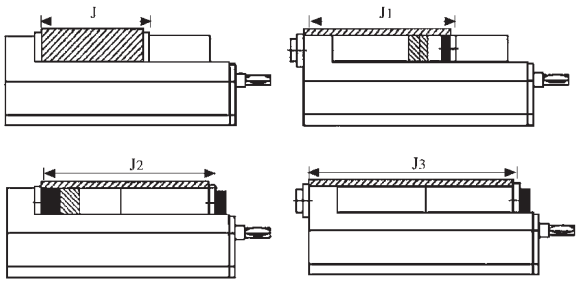

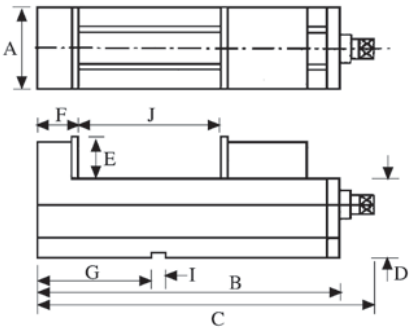

ORDER No.	MODEL	A mm	B mm	C mm	D mm	E mm	F mm	G mm	I mm	Jaw Opening (Max.) J mm	J1 mm	J2 mm	J4 mm	Clamping Force	Weight Body
425-101	BHV-100V	101	340	470	85	48	80	125	16	125	190	230	320	4000 kgf	27 kgs
425-102	BHV-130V	131	405	535	95	55	85	150	18	180	240	290	380	5000 kgf	40 kgs
425-103	BHV-160V	161	495	625	105	58	100	165	18	240	320	360	470	6500 kgf	58 kgs
425-104	BHV-200V	201	570	700	110	63	108	190	18	280	360	420	540	8000 kgf	87 kgs

TECHLEADER® TOOLING INC.

MC Mechanical Power Vise

MODEL: BMV

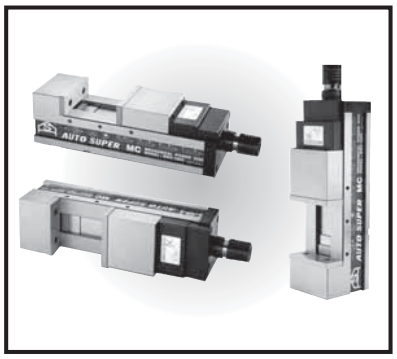

Features

1. MC Mechanical Power Vise is equipped with 8 pieces of support rollers to increase the gripping force.
2. One piece casting of vise bed and flexed jaw.
3. Down thrust "Semis-sphere Segment" mechanism-eliminates jaw life and work tilt.
4. Rigid material-vise body of iron FCD60JIS (equal to GGG60) with 60 kgs/mm^2 or 80,000 psi tensile strength.
5. Vise bed flame with harden treatment up to HRC 45° and up takes up wear and maintain for long.

Accuracy Testing Standard

NO.	ITEM	JIS Grade 1	Guaranteed
1	Vise side-lock on bottom slide way square	0.020 100 mm	0.010mm/0.0004" 100 mm
2	Keyways on bottom of vise bed square to clamping surface of jaw plate	0.020 100 mm	0.015mm/0.0006" 100 mm
3	Both jaw plate parallel	0.050 100 mm	0.020mm/0.0008" 100 mm
4	Max opening test block parallel to bottom of Vise body	0.050 100 mm	0.030mm/0.0012" 100 mm
5	Top of rectangular test block clamped tightly by jaw parallel to bottom of vise body	0.030 100 mm	0.020mm/0.0008" 100 mm
6	Surface of vise bed parallel to bottom of vise body	0.020 100 mm	0.015mm/0.0006" 100 mm

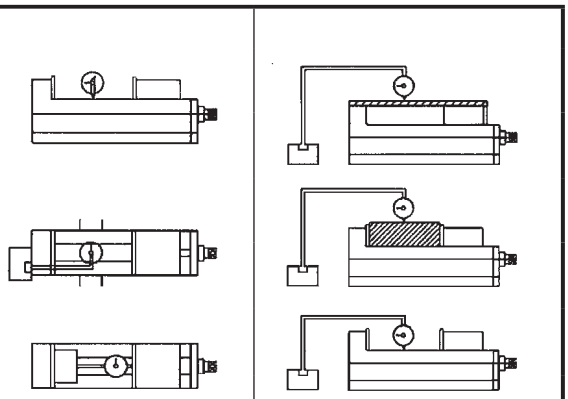

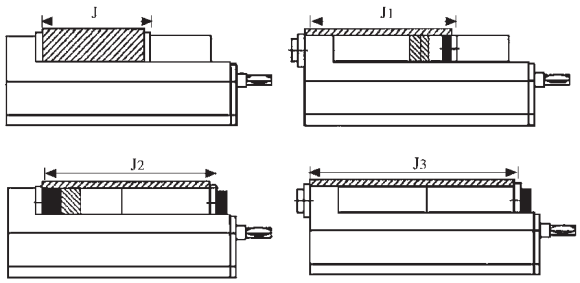

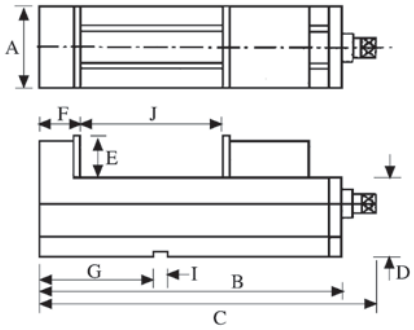

ORDER No.	MODEL	A mm	B mm	C mm	D mm	E mm	F mm	G mm	I mm	Jaw Opening (Max.) J mm	J1 mm	J2 mm	J4 mm	Clamping Force	Weight Body
425-105	BMV-100V	101	340	470	85	48	80	125	16	145	190	230	320	4000 kgf	27 kgs
425-106	BMV-130V	131	405	535	95	55	85	150	18	240	240	290	380	4500 kgf	40 kgs
425-107	BMV-160V	161	495	625	105	58	100	165	18	290	320	360	470	5200 kgf	58 kgs
425-108	BMV-200V	201	570	700	110	63	108	190	18	330	360	420	540	6500 kgf	87 kgs

TECHLEADER® TOOLING INC.

MC Hydraulic & Angle Lock Vise

MODEL: BHV & BMV

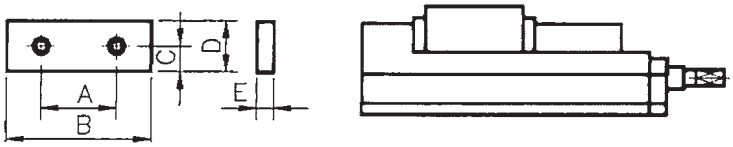

PLAIN HARD JAWS

HJ-100,130,160, 200 *Unit/mm*

ORDER NO	425-180	425-181	425-182	425-183
HJ	100	130	160	200
A	60	90	90	120
B	100	130	160	200
C	22	25	25	28
D	48	55	58	63
E	15	15	15	18

SERRATED HARD JAWS

LJ-100,130,160, 200 *Unit/mm*

ORDER NO	425-185	425-186	425-187	425-188
LJ	100	130	160	200
A	60	90	90	120
B	100	130	160	200
C	22	25	25	28
D	48	55	58	63
E	15	15	15	18

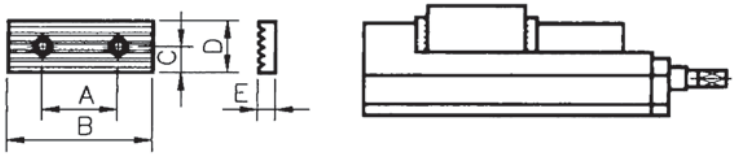

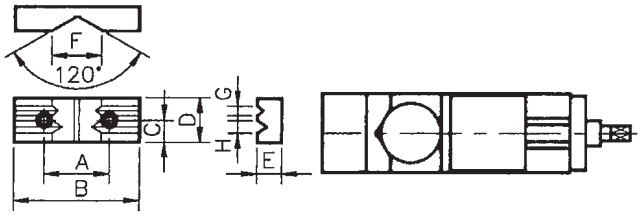

V-GROOVE HARD JAWS

VJ-100,130,160, 200 *Unit/mm*

ORDER NO	425-190	425-191	425-192	425-193
VJ	100	130	160	200
A	60	90	90	120
B	100	130	160	200
C	22	25	25	28
D	48	55	58	63
E	30	32	32	40

TJ-100,130,160, 200 *Unit/mm*

ORDER NO	425-195	425-196	425-197	425-198
TJ	100	130	160	200
A	60	90	90	120
B	100	130	160	200
C	22	25	25	28
D	64	69	74	88
E	21	24	24	31

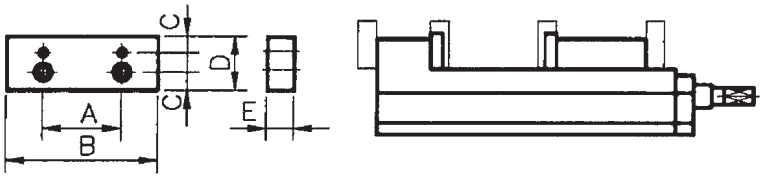

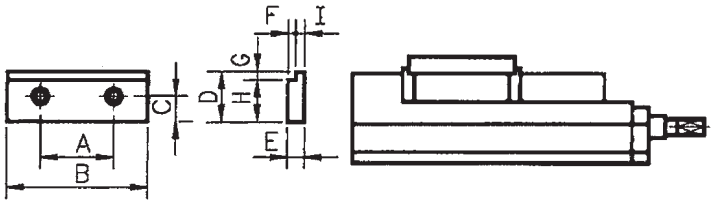

STEP HARD JAWS

SJ-100,130,160, 200 *Unit/mm*

ORDER NO	425-200	425-201	425-202	425-203
SJ	100	130	160	200
A	60	90	90	120
B	100	130	160	200
C	22	25	25	28
D	48	55	58	63
E	15	15	15	18
F	5	5	5	5
G	5	5	5	5
H	43	50	53	58
I	10	10	10	13

STEP HARD JAWS

FJ-100,130,160, 200 *Unit/mm*

ORDER NO	425-205	425-206	425-207	425-208	425-209	425-210	425-211	425-212	425-213	425-214
FJ	1001	1002	1003	1004	1005	1301	1302	1303	1304	1305
A	60	60	60	60	60	90	90	90	90	90
B	100	100	100	100	130	130	130	130	130	130
C	22	22	22	22	22	25	25	25	25	25
D	48	63	73	48	63	55	73	103	63	73
E	15	21	23	48	48	15	23	30	48	48
F	M10	M10	M10	M10	M10	M10	M10	M10	M10	M10
ORDER NO	425-215	425-216	425-217	425-218	425-219	425-220	425-221	425-222	425-223	425-224
FG	1601	1602	1603	1604	1605	2001	2002	2003	2004	2005
A	90	90	90	90	90	90	90	90	90	120
B	160	160	160	160	160	200	200	200	200	200
C	25	25	25	25	25	28	28	28	28	28
D	58	73	103	63	73	63	103	123	63	102
E	15	23	30	48	48	18	30	37	63	63
F	M10	M10	M10	M10	M10	M12	M12	M12	M12	M12

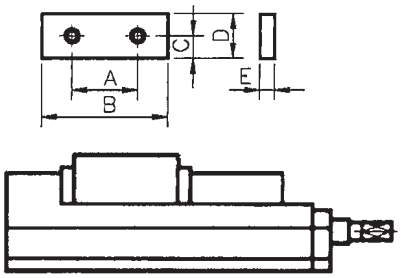

TECHLEADER® TOOLING INC.

Precision Hydraulic & Angle Lock Horizontal Vise

MODEL: AHV-160

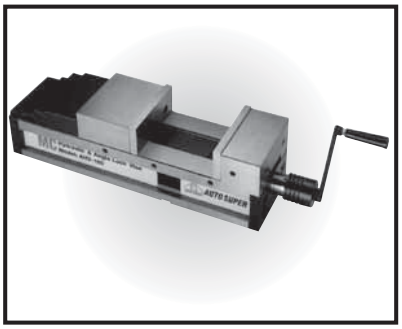

The unique features of AHV series provide the users an operation of ease and comfort.

1. Angle-lock type Hydralic vise model AHV is mostley suitable for heavy duty cutting on Vertical Machining Center.
2. Semi-spherical segment eliminates jaw lift and work piece tilt.
3. Rigid material ductile iron FCD60 with 60 Kms/mm ensures high tensile strength, low weariness and not deformation.
4. Vise bed flame hardened to HRC 45 up is capable to obtain low weariness and last the high accuracy for long.
5. For (4) different jaws set up can be obtained.
6. Chip comers is applied on this vise to prevent form chips falling lo Leadscrew and inside of vise.

Specification

Jaw width	160 mm
Depth of Jaw	60 mm
Jaw Opening J	280 mm
Jaw Opening J1	360 mm
Jaw Opening J2	420 mm
Jaw Opening J3	540 mm

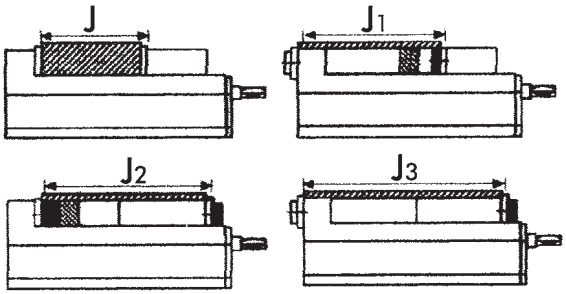

ORDER NO.
425-115

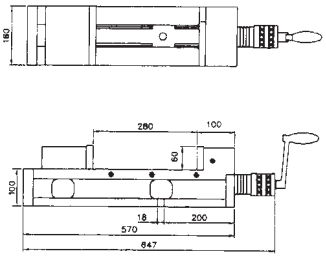

Hydraulic Vise

MODEL: AH

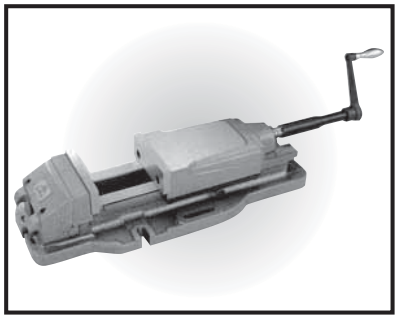

Features

1. Body is made of high quality cast iron, which resists deflection or bending, and its sliding surface flame hardened and ground.
2. Jaws are made of special steel, which is hardened and ground.
3. Hydra. Booster provided a steady clamping force against shocks and vibrations during the operation, since it fastened the work piece resiliently with and aid of the discsprings mounted inside.
4. Clamping force may be freely adjusted with this base line as a guide, it magnifies a small force into an enormous clamping force by virtue of its unique Hydra. Booster incorporated.
5. With hyra. Power Machine Vise, auxiliary with equipment such as a hydraulic pump, hose and air compressor are no longer needed.

Optional Accesseries

SWIVEL BASE

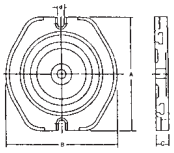

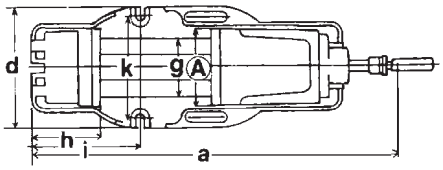

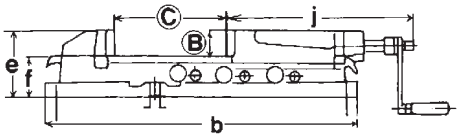

Order No.	Model	A mm	B mm	C mm	Weight (kg)
425-144	SB-402	240	22	25	7
425-145	SB-502	280	266	32	12
425-146	SB-602	330	310	35	16
425-147	SB-802	375	355	40	16

Order No.	Model	A mm	B mm	C mm	a mm	b mm	c mm	d mm	e mm	f mm	g mm	h mm	i mm	j mm	k mm	Max Clamping force (kgf)	Weight (kg)	
																	Body	Swivel Base
425-140	AH-4	100	36	170	525	430	130	160	94	60	78	100	155	263	120	2500	18	7
425-141	AH-5	125	46	220	670	540	165	185	118	72	97	117	185	341	145	3500	34	12
425-142	AH-6	150	51	300	800	620	200	240	133	82	116	125	247	380	200	5000	55	16
425-143	AH-8	200	62	300	900	700	240	280	162	100	160	165	266	435	240	8000	90	16

TECHLEADER® TOOLING INC.

Hydraulic & Angle Lock Vise

MODEL: HW

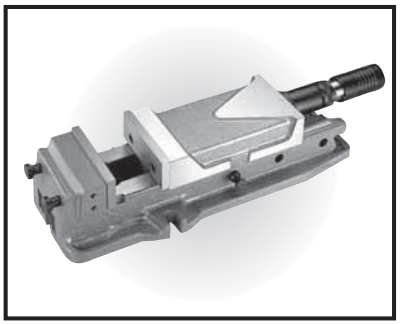

Features

1. Rigid material vise body of ductile iron FCD60.
2. Down thrust "semi-sphere Segment" mechanism eliminates lift and work tilt.
3. Vise bed flame hardened to HRC 45 and up takes up wear and maintain accuracy for long life.
4. Max. Hydraulic clamping force.....4,000kgs
5. Max. Hydraulic & mechanical clamping force.....6,000kgs

Optional Accesseries

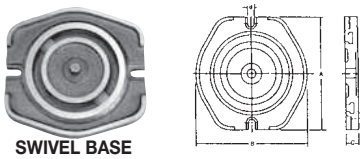

SWIVEL BASE

Order No.	Model	A mm	B mm	C mm	Weight (kg)
425-153	HW-125B	280	266	32	12
425-154	HW-160B	330	310	35	16
425-155	HW-200B	375	355	40	16

Down thrust "semi-sphere segment" mechanism-eliminates jaw lift and work-piece tilt.

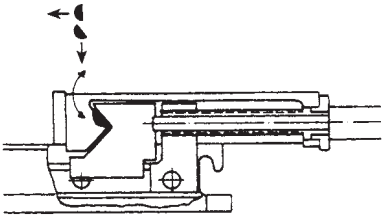

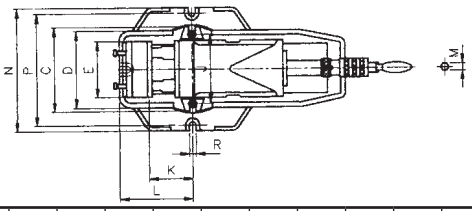

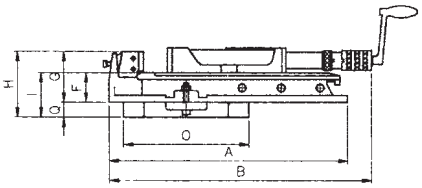

Order No.	Model	A mm	B mm Min.	B mm Max.	C mm	D mm	E mm	F mm	G mm	H mm	I mm	J mm	K mm	L mm	M mm	N mm	O mm	P mm	Q mm	R mm	Jaw Width	Jaw Opening	Jaw Depth
425-150	HW-125	505	570	795	190	170	130	72	127	106	160	75	180	180	14	280	268	260	32	16	130mm	220mm	55mm
425-151	HW-160	605	625	935	240	210	160	82	140	117	192	101	195	195	14	334	320	310	35	18	160mm	310mm	58mm
425-152	HW-200	700	725	1035	280	240	200	100	163	146	240	115	265	265	14	420	420	390	50	18	200mm	310mm	63mm

Heavy Duty Precision Vise

MODEL: KR

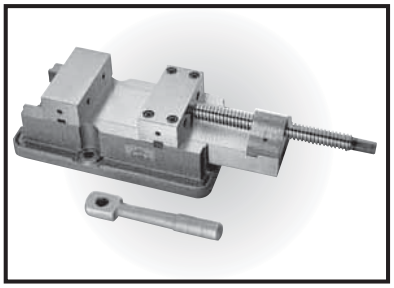

Features

1. Stationary front jaw.
2. The back jaw moves alon with the slde reducing the tendency towards delection preventing the workpieces from tilting.
3. Jaws and body are steel contruction
4. Hardened & ground on all sliding and contaction surface.
5. Ideal for CNC application.

Optional Accesseries

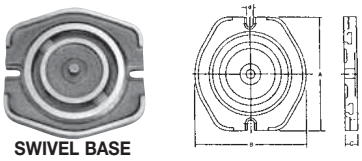

SWIVEL BASE

Order No.	Model	A mm	B mm	C mm	Weight (kg)
425-163	KR-6B	280	266	32	12

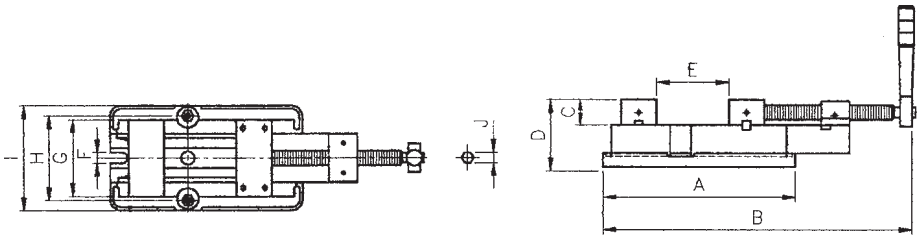

Order No.	Model	A mm	B mm	C mm	D mm	E mm	F mm	G mm	H mm	I mm	J mm
425-160	KR-6	360	630	48	127	210	18	145	160	198	19

Jaw Width	145mm (6")
Jaw Opening	210mm (8-1/2")
Jaw Depth	48mm (1-7/8")
Overall Height	127mm (6")
Net Weight (w/o base)	40 kgs

TECHLEADER® TOOLING INC.

Heavy Duty Precision Horizontal Vise

MODEL: KR-6G

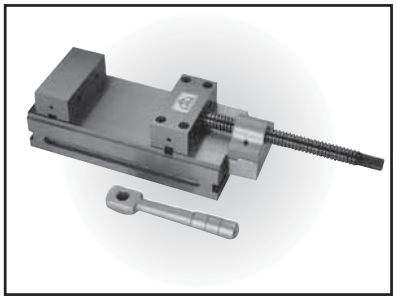

Features

1. Stationary front jaw.
2. The back jaw moves along with the slide reducing the tendency of deflection which prevents workpieces from tilting.
3. Jaws and body are steel construction.
4. Hardened & ground on all sliding and contaction surface.
5. Ideal for CNC application.

Optional Accesseries

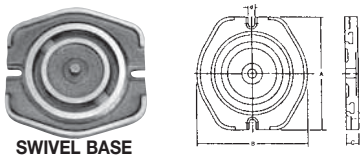

Order No.	Model	A mm	B mm	C mm	Weight (kg)
425-163	KR-6B	280	266	32	12

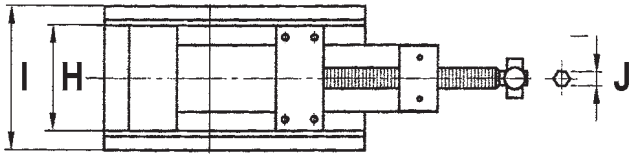

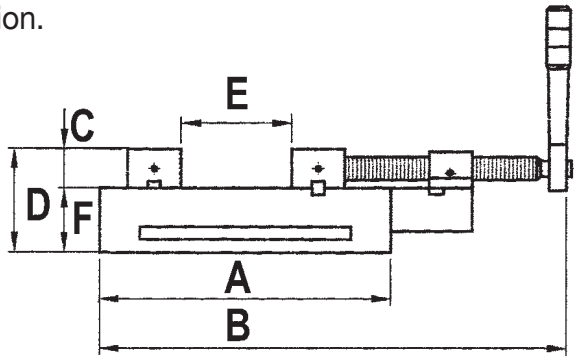

Order No.	Model	A mm	B mm	C mm	D mm	E mm	F mm	G mm	H mm	I mm	J mm
425-161	KR-6G	360	630	48	127	210	79	145	145	160	19

Precision Angle Lock Vise

MODEL: VA-ECONOMY

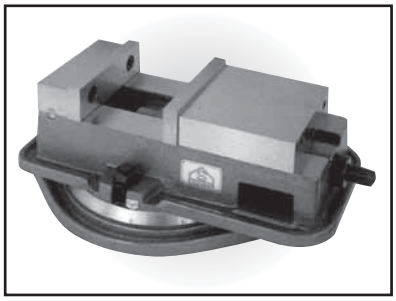

Features

1. The vice-plate position can be changed to increase the usage range.
2. The bed of the vice and the jaw plates are hardened and ground.

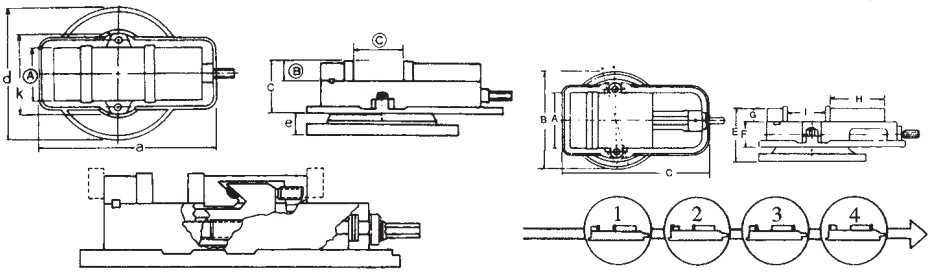

Order No.	Model	A mm	B mm	C mm	a mm	k mm	c mm	d mm	e mm	f mm	Gross Weight (kg)	
											Plain	With
425-170	VA-4	102	36	103	325	165	96	243	31	6	16	20
425-171	VA-6	152	46	142	418	209	119	328	39	9	36	42
425-172	VA-8	200	62	197	548	295	147	416	45	11	70	80

TECHLEADER® TOOLING INC.

M/C Tooling Blocks/ Tombstones

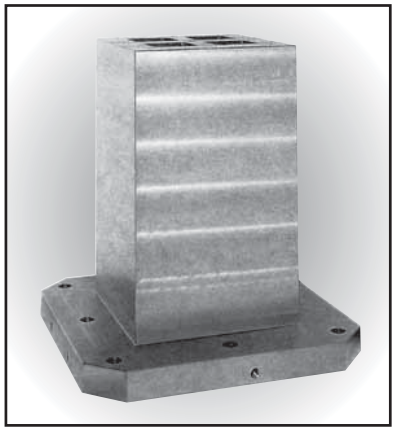

AJB-HB M/C 4 FACE CLAMPING CUBES

- Material/Finish: Material: FC300 (JIS) / GG30 (DIN), Heat Treated (Normalized)
- Application: Good for horizontal M/C
- Features: Ready to finish your required hole pattern to mount your special jigs, vises or other work holding devices.
- Eye bolt included.

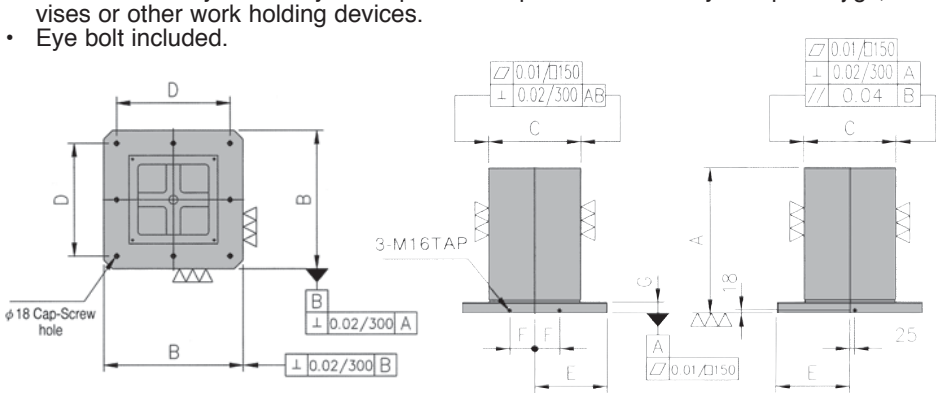

* Special Designs Welcomed!

ORDER NO.	MODEL NO.	A mm	B mm	C mm	D mm	E mm	F mm	G mm	No. of Mounting Hole	kg
425-070100	AJB400 x 250 x 500 HB	500	400	250	320	200	55	50	4	190
425-070200	AJB500 x 300 x 600 HB	600	500	300	400	250	75	60	8	253
425-070205	AJB500 x 350 x 550 HB	550	500	350	400	250	75	65	8	315
425-070300	AJB630 x 350 x 700 HB	700	630	350	500	315	100	65	8	423
425-070305	AJB630 x 400 x 700 HB	700	630	400	500	315	100	65	8	472
425-070310	AJB630 x 500 x 700 HB	700	630	500	500	315	100	65	8	525
425-070400	AJB800 x 550 x 850 HB	800	800	550	640	400	135	80	8	785

AJB-MP M/C DOUBLE-SIDED ANGLE PLATES

- Material/Finish: Material: FC300 (JIS) / GG30 (DIN), Heat Treated (Normalized)
- Application: Good for horizontal M/C
- Features: Ready to finish your required hole pattern to mount your special jigs, vises or other work holding devices.
- Eye bolt included.

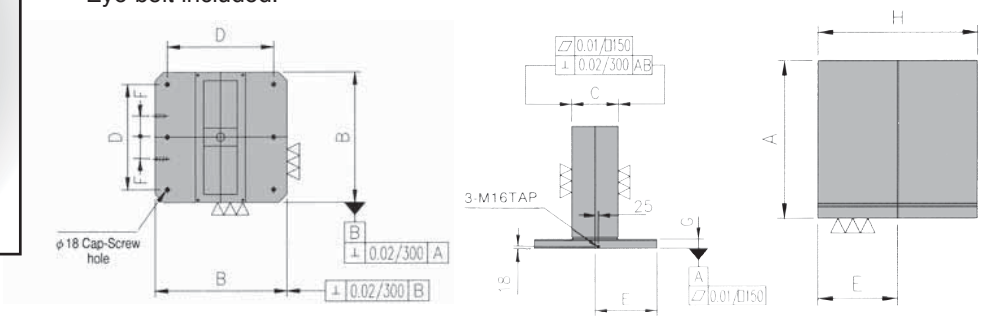

* Special Designs Welcomed!

ORDER NO.	MODEL NO.	A mm	B mm	C mm	D mm	E mm	F mm	G mm	G mm	No. of Mounting Hole	kg
425-100100	AJB400 x 150 x 500 MP	500	400	150	320	200	55	50	400	4	210
425-100200	AJB500 x 200 x 600 MP	600	500	200	400	250	75	60	500	6	275
425-100300	AJB630 x 250 x 700 MP	700	630	250	500	315	100	65	630	6	515
425-100400	AJB800 x 300 x 800 MP	800	800	300	640	400	135	80	800	6	845

AngLock® D-Series Vises

D40
D675
D688™
D810
D100

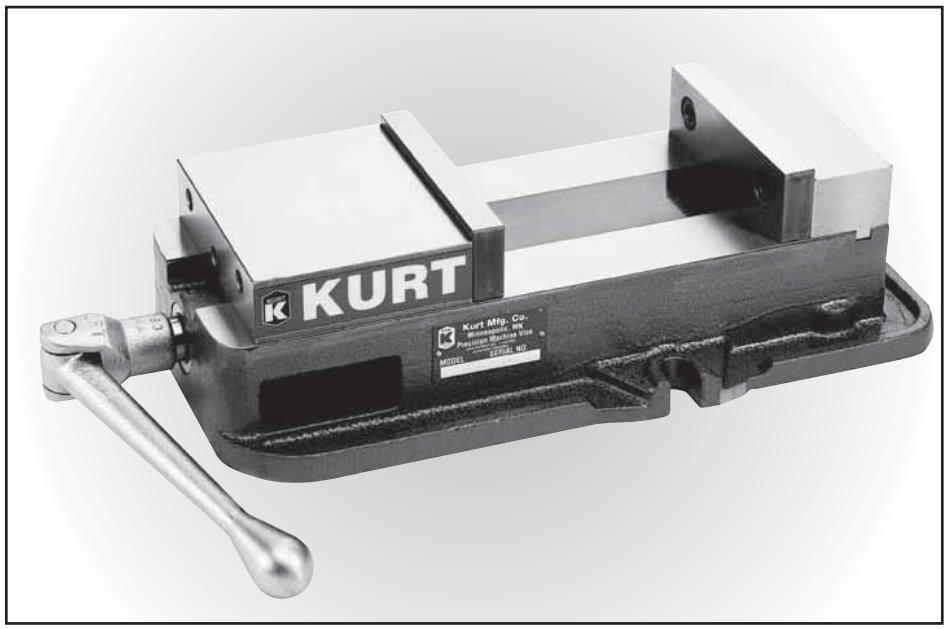

Accessories see pages 5-130 through 5-132

The original Kurt Anglock D-Series vises are designed for precision part clamping on basic machine tools such as knee-type mills, grinders and machining centers. D-Series vises are ideal for use in running production parts where datums, flatness and parallelism is important. You can precision bore, tap, drill, grind and finish with high accuracy on most parts made of die cast aluminum, steel, and iron in your Kurt Anglock vises. No other brand can give you the time proven accuracy of the Kurt Anglock vises. All Kurt vises have a friction reducing, needle bearing, thrust collar. The needle bearing increases jaw clamping pressure.

Features:

- AngLock design assures the movable jaw does not lift.
- Hardened vise bed.
- Hardened jaw plates.
- Semi-hard steel screw.
- 80,000-PSI ductile iron body.
- Matching of bed height ±.001" available at an additional cost for the D40. and D100 vises.
- Matching of the keyway to the stationary jaw ±.001" is available at additional cost.
- Some models available in metric version.
- 10 year limited warranty.

TECHLEADER® TOOLING INC.

KURT

ANGLOCK® D-Series Vises

MANUAL VISE CLAMPING FORCE - LBS.					
Torque Ft.-Lbs.	D40	D675	D688	D810	D100
10	1,653	989	1,129		
20	2,923	1,776	2,242	1,834	1,698
30	4,103	2,848	3,337		
40	5,241	3,628	4,148	2,843	3,300
50	6,513	4,365	5,379		
60	7,807	5,432	6,310	4,349	4,686
70		6,111	6,977		
80		6,721	7,968	5,706	6,623
100				7,042	7,842
120				8,688	9,970
140				10,413	11,429
160				11,596	12,792
180					14,681
200					16,163
220					18,124
240					20,563
260					22,093
280					24,077
300					26,277

DIMENSIONAL DATA					
	D40	D675	D688	D810	D100
A	2.250	2.875	2.875	3.310	3.875
B	4.000	6.000	6.000	8.000	10.000
C	12.340	16.750	16.810	21.810	27.500
D	2.562	3.562	3.562	4.686	5.875
E	0.500	0.688	0.688	0.813	0.813
F	1.115	1.485	1.485	1.965	2.465
G	1.355	1.980	1.980	2.450	2.950
H	1.235	1.735	1.735	2.200	2.937
J	0.547	0.725	0.725	1.075	1.320
K	4.000	4.800	4.800	6.190	8.630
L	1.281	1.540	1.540	1.865	2.225
M	N/A	1.390	N/A	1.670	N/A
N	0.687	0.940	0.940	1.220	1.625
O	2.500	3.875	3.875	4.750	5.750
P	3/8-16	1/2-13	1/2-13	5/8-11	3/4-10
Q	6.380	8.750	8.750	11.500	14.500
R	5.750	8.250	8.250	11.000	13.250
S	2.625	3.813	3.813	4.940	6.188
T	4.590	6.710	5.667	8.500	10.590
U	0.531	0.656	0.320	0.880	0.940
V	1.000	2.000	1.860	2.375	1.690
W	9/16	3/4	3/4	7/8	1”
AA	3-7/8	7-1/2	8.80	10	9-3/4
BB	5-3/4	10-1/2	11.500	13.5	14
CC	8-7/16	13-1/8	14.320	17-1/4	19-3/4
DD	10-5/16	15-7/8	17.030	20-3/4	24-3/4
Ship Wt	32	78	78	158	300

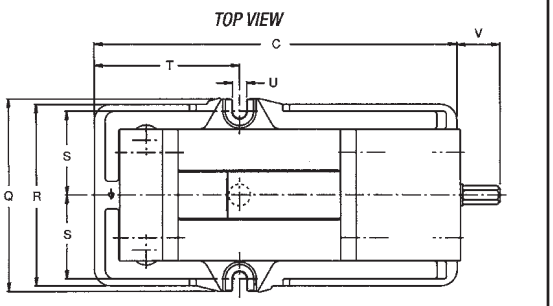

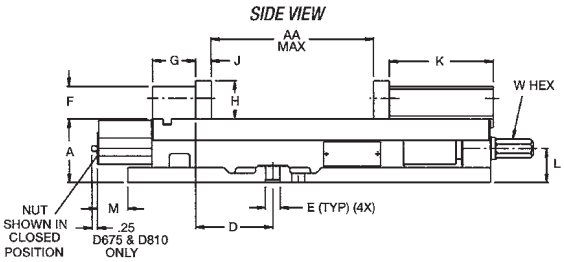

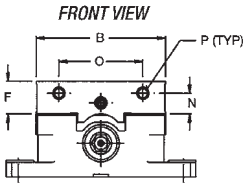

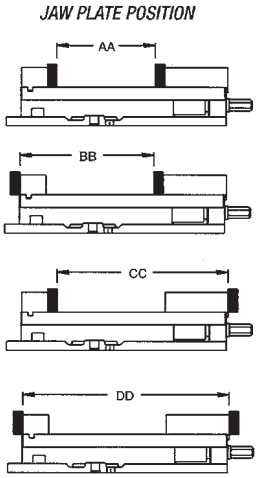

VERSATILE LOCK™ Vises
Standard & Short

Manual Hydraulic Air

The Versatile Lock vise is the industry's ultimate single station CNC vise. It offers ultra-precision function through these important design features: The original, time proven Kurt AngLock design prevents parts from lifting upward under heavy clamping loads. The "pull-type" jaw clamping reduces jaw stationary deflection by at least 80%. The one piece vise body and stationary jaw provide greater strength while reducing weight.

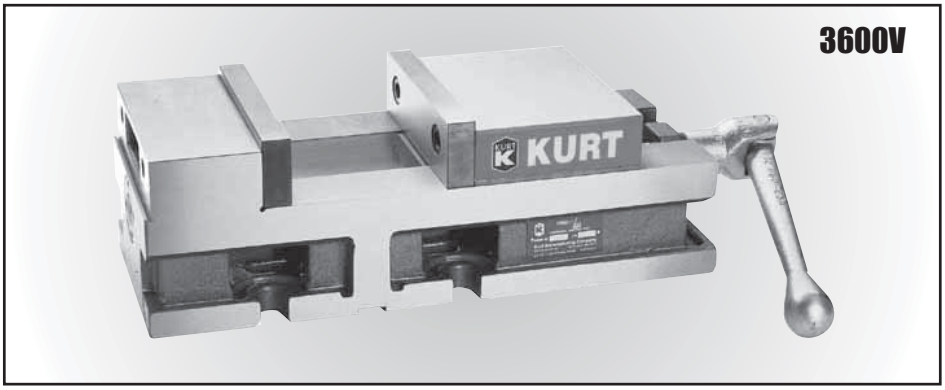

Features:
- Can be mounted upright or on either side.
- Matched stationary jaw to keyway including the body height ±.001".
- .0005" clamping repeatability
- Footprint on the short version is 13". Ideal for the smallest machines.
- Hydraulic option is available as a complete package including the intensifier (specify foot or hand actuation).
- All air and hydraulic units feature a 1/4" vise stroke.
- Air vise has a precise and repeatable "gentle touch" for delicate parts.
- Some models available in metric.
- 10 year limited warranty.
- Optional internal hex available for 3600V only.

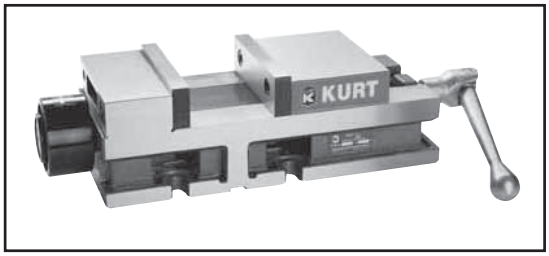

3600H - Standard Hydraulic

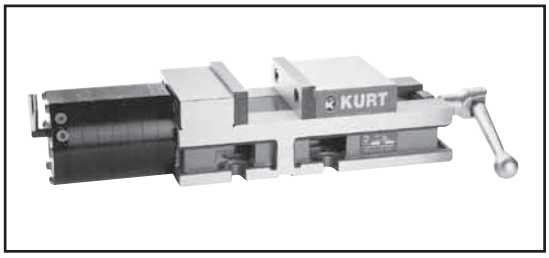

3600A - Standard Air

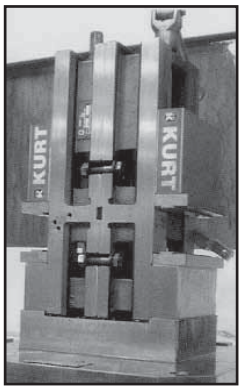

The 3600V shown mounted "back to back".

Makes a fast, easy and economical vise tombstone. Bases can be tailored for most HMC's.

TECHLEADER® TOOLING INC.

KURT

VERSATILE LOCK™ Vises
Standard & Short

DIMENSIONAL DATA						
	Manual		Hydraulic		Air	
	3600V	**3620V**	**3600H**	**3620H**	**3600A**	**3620A**
A	3.187	3.187	3.187	3.187	3.187	3.187
B	6.000	6.000	6.000	6.000	6.000	6.000
C	15.060	12.940	15.060	12.940	15.060	12.940
D	2.750	2.750	2.750	2.750	2.750	2.750
E	0.688	0.688	0.688	0.688	0.688	0.688
F	1.485	1.485	1.485	1.485	1.485	1.485
G	2.750	2.750	2.750	2.750	2.750	2.750
H	1.735	1.735	1.735	1.735	1.735	1.735
J	0.725	0.725	0.725	0.725	0.725	0.725
K	4.500	4.500	4.500	4.500	4.500	4.500
L	2.250	2.250	2.250	2.250	2.250	2.250
M	5.000	5.000	5.000	5.000	5.000	5.000
N	0.937	0.937	0.937	0.937	0.937	0.937
O	3.875	3.875	3.875	3.875	3.875	3.875
P	1/2-13	1/2-13	1/2-13	1/2-13	1/2-13	1/2-13
Q	2.000	2.000	2.000	2.000	2.000	2.000
R	4.250	4.250	4.250	4.250	4.250	4.250
S	3.000	3.000	3.000	3.000	3.000	3.000
T	1.380	1.380	1.380	1.380	1.380	1.380
U	0.630	0.630	0.630	0.630	0.630	0.630
V	1.940	1.940	1.940	1.940	1.940	1.940
W	3/4	3/4	3/4	3/4	3/4	3/4
X	5.640	5.640	5.640	5.640	5.640	5.640
Y	0.630	0.630	0.630	0.630	0.630	0.630
AA	6.000	4.000	6.000	4.000	6.000	4.000
BB	9.500	7.500	N/A	N/A	N/A	N/A
CC	11.250	9.250	11.250	9.250	11.250	9.250
DD	14.750	12.750	N/A	N/A	N/A	N/A
EE	N/A	N/A	2.410	2.410	N/A	N/A
GG	N/A	N/A	3.375	3.375	N/A	N/A
HH	N/A	N/A	N/A	N/A	7.220	7.220
KK	N/A	N/A	N/A	N/A	1.030	1.030
LL	N/A	N/A	N/A	N/A	5.000	5.000
SHIP WT. LBS.	69	64	74	69	75	

70

Side View

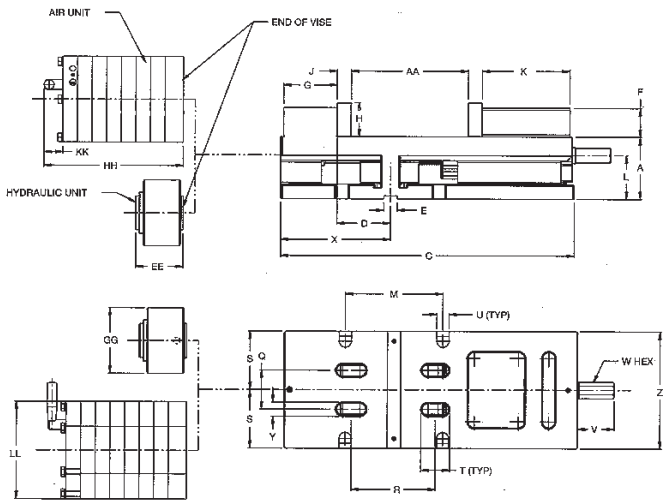

Front View

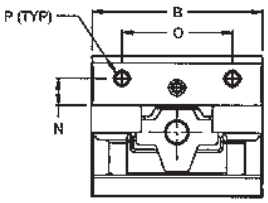

Jaw Positions

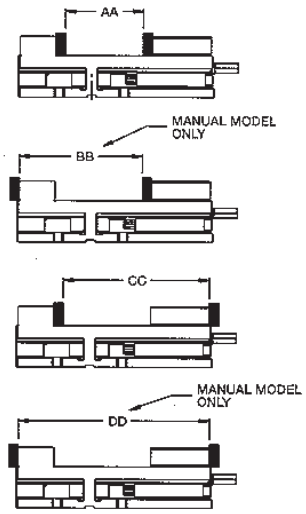

VISE CLAMPING FORCE-LBS.		
Manual Torque Ft.-Lbs.	Manual	
	3600V	3620V
10	653	653
20	1,743	1,743
30	2,234	2,234
40	3,015	3,015
50	3,833	3,833
60	4,438	4,438
70	5,528	5,528
80	6,356	6,356

VISE CLAMPING FORCE-LBS.		
Hydraulic PSI	Hydraulic	
	3600H	3620H
400	1.575	1,575
800	3,150	3,150
1200	4,725	4,725
1600	6,300	6,300
2000	7,875	7,875
2400	9,450	9,450
2800	11,025	11,025
3200	12,600	12,600

VISE CLAMPING FORCE-LBS.		
Air PSI	Air	
	3600A	3620A
10	320	320
20	840	840
30	1,280	1,280
40	1,780	1,780
50	2,200	2,200
60	2,720	2,720
70	3,240	3,240
80	3,800	3,800
90	4,380	4,380
100	5,000	5,000

VERSATILE LOCK™ Vises
Reverse and Short Reverse

Manual
Hydraulic Air

Use the Versatile Lock in this configuration for the added benefit of easier part programming in "Y" axis positive direction. It also reduces the "reach-over" distance making part loading safer and easier for the operator.

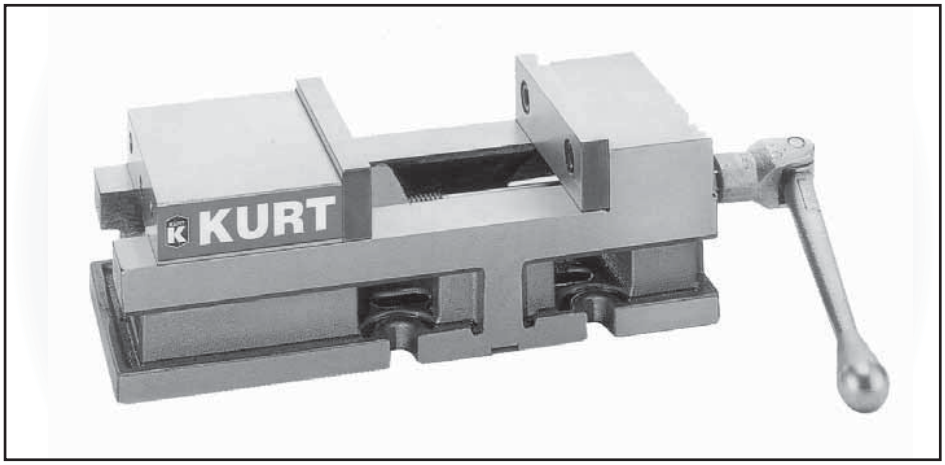

Features:

- Can be mounted upright or on either side.
- Matched stationary jaw to keyway including the body height ±.001".
- .0005" clamping repeatability
- Footprint on the short version is 13". Ideal for the smallest machines.
- Hydraulic option is available as a complete package including the intensifier (specify foot or hand actuation).
- All air and hydraulic units feature a 1/4" vise stroke.
- Air vise has a precise and repeatable "gentle touch" for delicate parts
- Some models available in metric.
- 10 year limited warranty.

TECHLEADER® TOOLING INC.

KURT

VERSATILE LOCK™ Vises

Reverse and Short Reverse

DIMENSIONAL DATA						
	Manual		Hydraulic		Air	
	3610V	**3630V**	**3610H**	**3630H**	**3610A**	**3630A**
A	3.187	3.187	3.187	3.187	3.187	3.187
B	6.000	6.000	6.000	6.000	6.000	6.000
C15.060	12.940	15.060	12.940	15.060	12.940	
D	2.750	2.750	2.750	2.750	2.750	2.750
E	0.688	0.688	0.688	0.688	0.688	0.688
F	1.485	1.485	1.485	1.485	1.485	1.485
G	2.750	2.750	2.750	2.750	2.750	2.750
H 1.735	1.735	1.735	1.735	1.735	1.735	
J	0.725	0.725	0.725	0.725	0.725	0.725
K 4.500	4.500	4.500	4.500	4.500	4.500	
L	2.250	2.250	2.250	2.250	2.250	2.250
M	5.000	5.000	5.000	5.000	5.000	5.000
N	0.937	0.937	0.937	0.937	0.937	0.937
O	3.875	3.875	3.875	3.875	3.875	3.875
P	1/2-13	1/2-13	1/2-13	1/2-13	1/2-13	1/2-13
Q	2.000	2.000	2.000	2.000	2.000	2.000
R	4.250	4.250	4.250	4.250	4.250	4.250
S	3.000	3.000	3.000	3.000	3.000	3.000
T	1.380	1.380	1.380	1.380	1.380	1.380
U	0.630	0.630	0.630	0.630	0.630	0.630
V	1.940	1.940	1.940	1.940	1.940	1.940
W	3/4	3/4	3/4	3/4	3/4	3/4
X	5.640	5.640	5.640	5.640	5.640	5.640
Y	0.630	0.630	0.630	0.630	0.630	0.630
AA	6.000	4.000	6.000	4.000	6.000	4.000
BB	9.500	7.500	N/A	N/A	N/A	N/A
CC	11.250	9.250	11.250	9.250	11.250	9.250
DD	14.750	12.750	N/A	N/A	N/A	N/A
EE	N/A	N/A	2.410	2.410	N/A	N/A
FF	N/A	N/A	1.940	1.940	N/A	N/A
GG	N/A	N/A	3.375	3.375	N/A	N/A
HH	N/A	N/A	N/A	N/A	7.220	7.220
JJ	N/A	N/A	N/A	N/A	2.100	2.100
KK	N/A	N/A	N/A	N/A	1.030	1.030
LL	N/A	N/A	N/A	N/A	5.000	5.000
MM	N/A	N/A	N/A	N/A	5/8	5/8
SHIP WT. LBS.	68	64	73	68	74	69

Side View

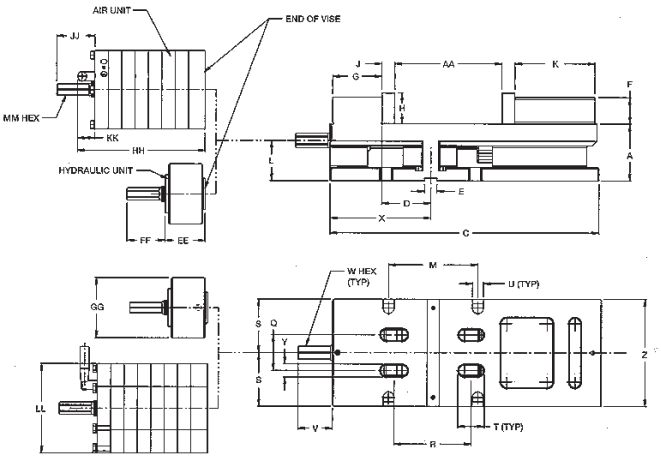

Bottom View

Rear View

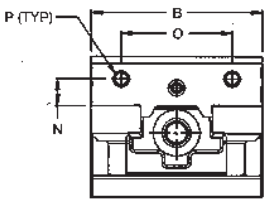

Jaw Positions

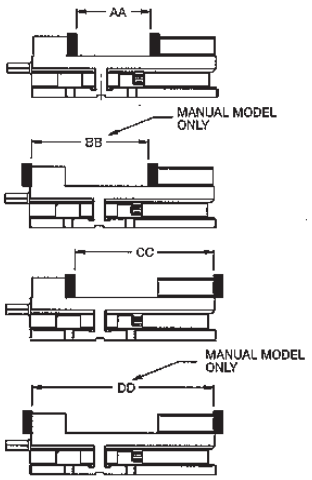

VISE CLAMPING FORCE-LBS.		
Manual Torque Ft.-Lbs.	Manual	
	3610V	3630V
10	653	653
20	1,743	1,743
30	2,234	2,234
40	3,015	3,015
50	3,833	3,833
60	4,438	4,438
70	5,528	5,528
80	6,356	6,356

VISE CLAMPING FORCE-LBS.		
Hydraulic PSI	Hydraulic	
	3610H	3630H
400	1.575	1,575
800	3,150	3,150
1200	4,725	4,725
1600	6,300	6,300
2000	7,875	7,875
2400	9,450	9,450
2800	11,025	11,025
3200	12,600	12,600

VISE CLAMPING FORCE-LBS.		
Air PSI	Air	
	3610A	3630A
10	320	320
20	840	840
30	1,280	1,280
40	1,780	1,780
50	2,200	2,200
60	2,720	2,720
70	3,240	3,240
80	3,800	3,800
90	4,380	4,380
100	5,000	5,000

Vise Accessories

ANGLOCK® Swivel Base Parallel Keeper

Swivel Base

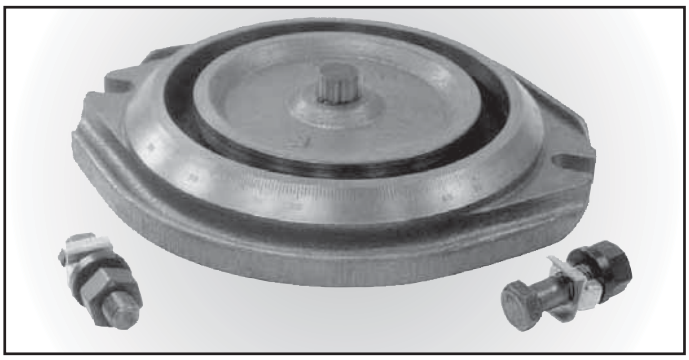

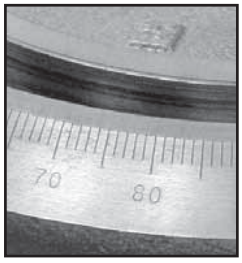

Swivel base allows positioning in 1 degree increments.

D688 vise shown mounted on D60-4-SA swivel base.

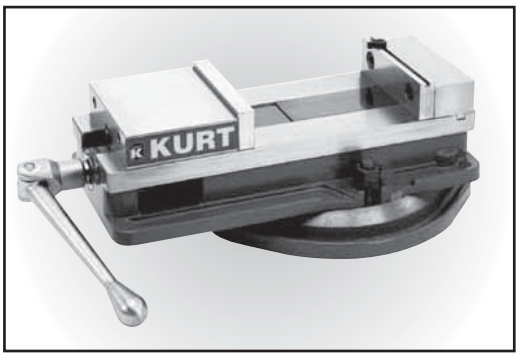

SWIVEL BASE			
Order No.	Part #	Ship Wt.	Fits These Vise Models
000-0000	D30-4-SA	7 lbs	D30
000-0000	D40-4-SA	16 lbs	D40
000-0000	D50-4-SA	20 lbs	D50
000-0000	D60-4-SA	26 lbs	D60,D675,D688
000-0000	D80-4-SA	80 lbs	D80,D810

Parallel Keeper

Part # KPS-6000

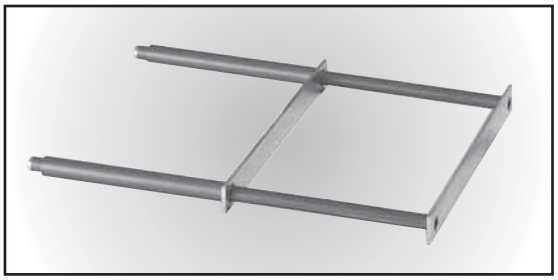

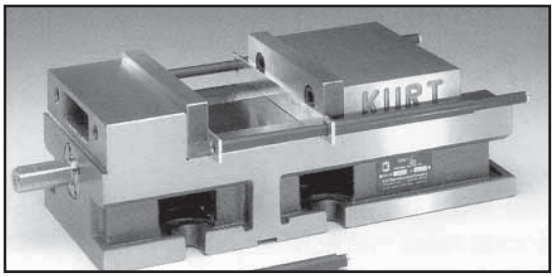

Shown with 3610V

Place your parallels in the vise against the jaws. Take the Parallel Keeper, squeeze it together and place it inside the parallels. Release the Parallel Keeper, it will push against the parallels, holding them against the jaws of the vise. It's that simple! Opens to 6 inches. Your new revolutionary labor saver, your "machinists third hand," is at work, saving part change time.

AngLock® PT Series Vises
Manual and Hydraulic

PT400A
PT800A
PTH400A
PTH800A

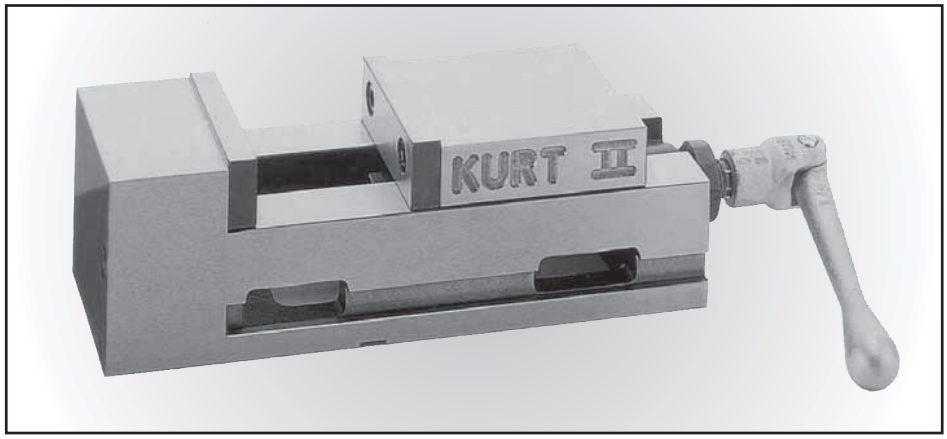

The AngLock PT Series vises offer high precision function through these important design features: The original, time-proven Kurt angLock design prevents parts from lifting upward under heavy clamping loads. The "pull-type" jaw clamping reduces stationary jaw deflection by at least 80% as the movable jaw is "pulled" into the stationary jaw and not pushed like standard screw type vises.

Features:
- "Pull-type" clamping means high precision and repeatability.
- Up to 20,000 lbs. precision clamping force.
- Can be mounted upright or on either side.
- CNC style allows compact spacing.
- Both sides ground square to within .001" with base and top.
- 80,000-PSI ductile iron body.
- Hydraulic option is available as a complete package, including the intensifier (specify foot or hand actuation).
- Matching of bed height ± .001" available at an additional cost.
- Matching of the keyway to the stationary jaw ±.001" is available at an additional cost.
- 10 year limited warranty.

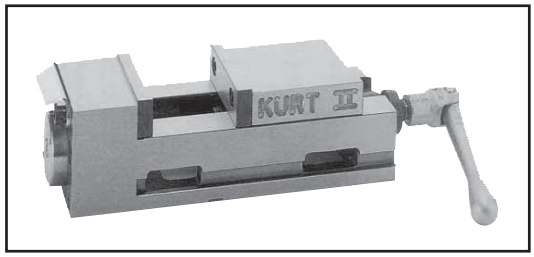

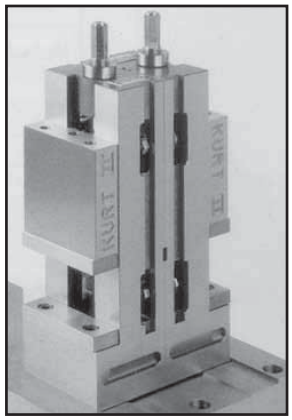

The PTH800A shown mounted "back to back"

Makes a fast, easy and economical vise tombstone. Bases can be tailored for most HMC's.

ANGLOCK® PT Series Vises
Manual and Hydraulic

VISE CLAMPING FORCE-LBS.		
Manual Torque Ft.-Lbs.	Manual	
	PT400A	PT800A
10	1,453	
20	2,740	1,637
30	4,090	
40	5,257	3,447
50	6,297	
60		3,895
80		4,764
100		6,065
120		8,023
140		9,947
160		10,337

VISE CLAMPING FORCE-LBS.		
Hydraulic PSI	Hydraulic	
	PTH400A	PTH800A
1,400	2,380	
1,800	3,100	
2,200	3,820	
2,800	4,880	
2,900		9,100
3,000	5,240	
3,400	6,100	
3,500		11,560
4,400		14,620
5,300		17,560
6,200		20,120

DIMENSIONAL DATA				
	Manual		Hydraulic	
	PT400A	**PT800A**	**PTH400A**	**PTH800A**
A		2.3753.500	2.375	3.500
B	4.093	8.156	4.093	8.156
C	11.438	19.875	11.438	19.875
D	2.750	4.500	2.750	4.500
E	0.500	0.813	0.500	0.813
F	1.115	1.985	1.115	1.985
G	2.188	3.500	2.188	3.500
H	1.235	2.200	1.235	2.200
J	0.547	1.075	0.547	1.075
K	4.000	6.690	4.000	6.690
L	1.410	2.062	1.410	2.062
M	2.060	3.120	2.060	3.120
N	9/16	7/8	9/16	7/8
O	0.687	1.220	0.687	1.220
P	2.500	4.750	2.500	4.750
Q	3/8-16	5/8-11	3/8-16	5/8-11
R	0.500	0.700	0.500	0.700
S	0.530	0.530	0.530	0.530
T	0.250	0.250	0.250	0.250
U	N/A	N/A	0.750	0.875
V	4	7-3/8	4	7-3/8
W	6-3/4	12	6-3/4	12
X	8-9/16	15-3/16	8-9/16	15-3/16
Y	11-5/16	19-13/16	11-5/16	19-13/16
Ship Wt Lbs.	32	159	46	180

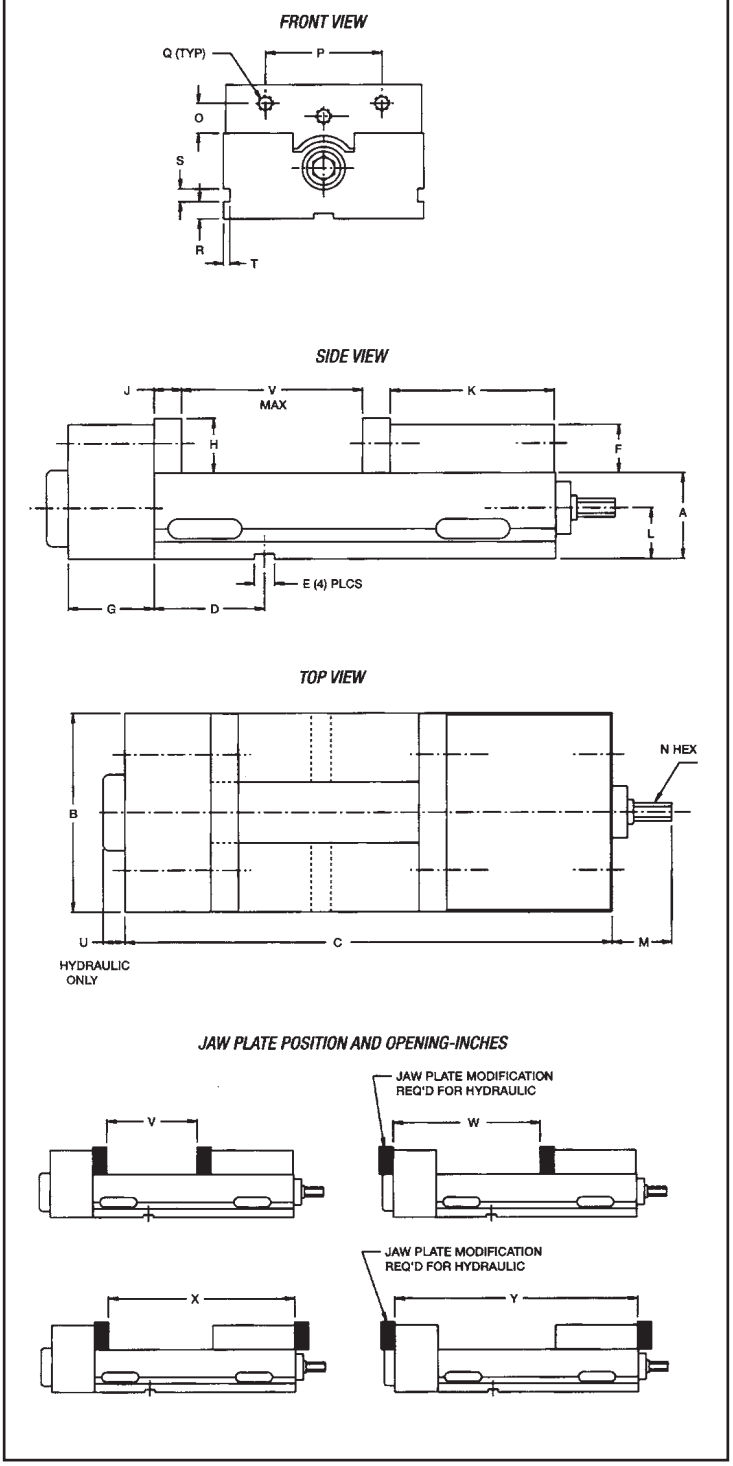

HDL AngLock® Vise (4 inch)

MANUAL & HYDRAULIC

The HDL Anglock® Vises are high density long vises with two clmping stations. They provide repeatable clamping to 0.0002" and combine high density with heavy duty features. Designed on a rugged 80,000 PSI ductile iron body with steel components, both models provide strength, rigidity and long term accuracy while absorbing machining vibration.

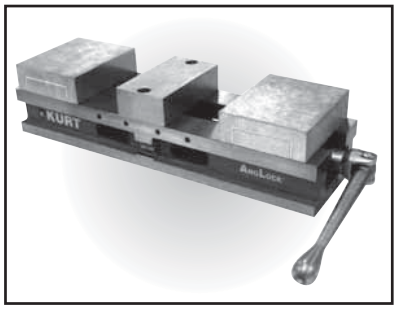

Features

1. Two clamping stations – repeatable clamping to 0.0002".
2. Full 3" opening in each station with standard hard jaw system.
3. Jaws are indexable 180 degrees.
4. Manual and hydraulic models available.
5. Fast easy conversion between manual and hydraulic models. Part # HDHLM4-3-SA-KIT.
6. Maximizes the number of parts in the work envelope.
7. Adjustable pre-load feature allows you to minimize pre-load range thus reducing the turns of the handle to open or close the vise (manual version).
8. Holding block features the ability to clamp same or dissimilar sized parts and provides pre-loading ability in the front or back jaw (manual version).
9. Lifetime Iron Clad Warranty.

Jaws for HDL Vises are sold separately and available with the following options.
• Hard Jaws • Machinable Aluminum Jaws
• Machinable Ductile Iron Jaws
• Aluminum Fixture Plate

Dimensional Data High Density 4" Full Open Vise HDL Manual & Hydraulic								
	OPTIONAL HARD JAWS HDLM4J-JAWKIT Shipping Weight 4.53kgs/10lbs				Convertible OPTION HARD AND CARVABLE JAWS			
	HDLM4J		HDHLM4J		HDLM4J		HDHLM4J	
	MM	Inch	MM	Inch	MM	Inch	MM	Inch
A	59.538	2.344	59.538	2.344	211.938	8.344	211.938	8.344
B	76.200	3.000	76.200	3.000	59.538	2.344	59.538	2.344
C	73.812	2.906	73.812	2.906	225.831	8.891	225.831	8.891
D	28.321	1.115	28.321	1.115	299.644	11.797	299.644	11.797
E	101.600	4.000	101.600	4.000	239.725	9.438	239.725	9.438
F	13.894	0.547	13.894	0.547	87.325	3.438	87.325	3.438
G	31.369	1.235	31.369	1.235	73.431	2.891	73.431	2.891
H	–	–	3.175	0.125	147.244	5.797	147.244	5.797
J	63.500	2.500	63.500	2.500	205.968	8.109	205.968	8.109
K	17.450	0.687	17.450	0.687	55.880	2.200	55.880	2.200
L	M10 x 1.50	M10 x 1.50	M10 x 1.50	M10 x 1.50	409.168	16.109	409.168	16.109
M	121.844	4.797	121.844	4.797	259.080	10.200	259.080	10.200
N	163.906	6.453	163.906	6.453	20.625	Hard Jaws Only 0.812	20.625	Hard Jaws Only 0.812
O	209.550	8.250	209.550	8.250	18.262	0.719	18.262	0.719
P	–	–	–	–	15.240	Hard & Soft Jaws 0.600	15.240	Hard & Soft Jaws 0.600

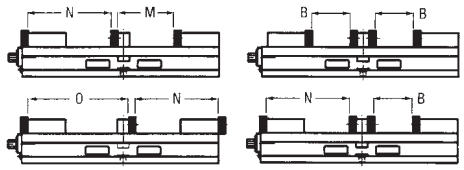

HARDENED JAW POSITIONS (MANUAL VICE SHOWN)

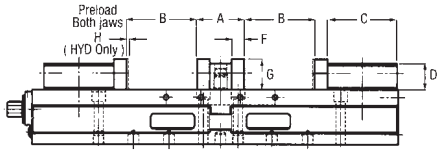

OPTIONAL HARD JAWS SHOWN (MANUAL VISE SHOWN)

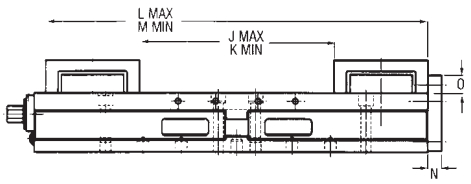

CONVERTIBLE OPTIONAL FOR CARVABLE JAWS (MANUAL VISE SHOWN)

OPTIONAL CONVERTIBLE KIT (HDLM6-CONVKIT) - JAW POSITIONS

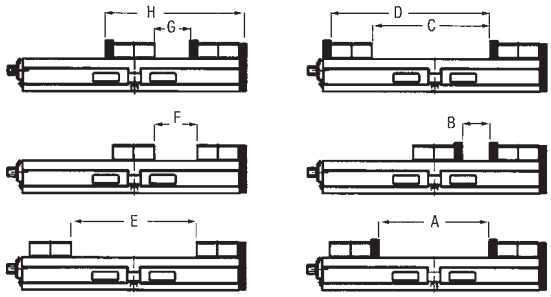

CONVERTIBLE OPTIONAL FOR HARD JAWS HDLM6J-CONVKIT (MANUAL VISE SHOWN)

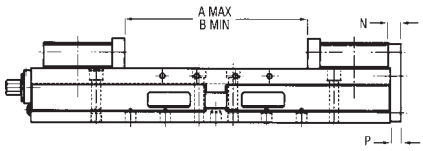

FRONT VIEW

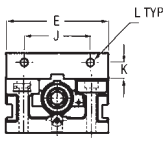

HDL AngLock® Vise (4 inch)

MANUAL & HYDRAULIC

ACCESSORY JAWKIT WITH OPTIONAL 1.9 HEIGHT JAW

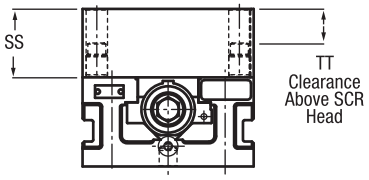

Accessory jaw plate show

CLAMPING FORCE LBS.			
Torque-Ft. Lbs.	HDLM4	Hydraulic PSI	HDHLM4
10	1,040	1,000	775
20	2,125	1,500	1,450
30	3,140	2,000	1,900
40	4,040	2,500	2,550
50	4,980	3,000	3,100
60	5,870	3,500	3,700
		4,000	4,200
		4,500	4,800

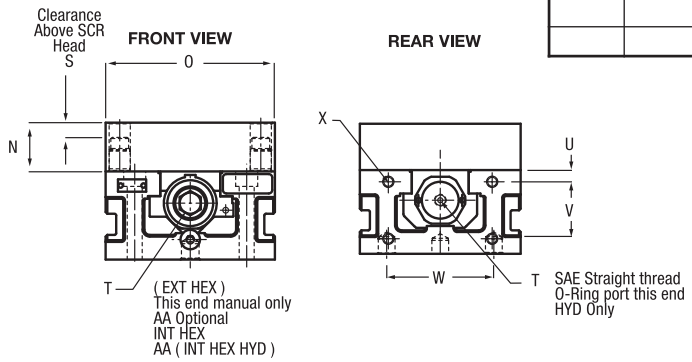

TOP VIEW

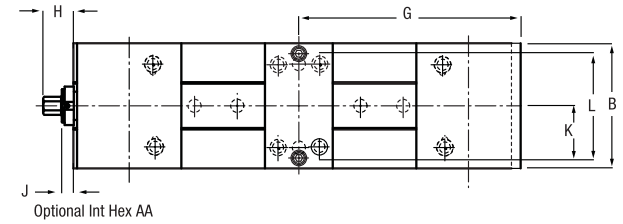

Aluminum Fixture Plate Accessory for HDLM Vise & CTHDLM Tower 4"		
	HDLM4ALP419	
	mm	inch
A	48.26	1.900
B	101.60	4.00
C	393.70	15.500
D	196.85	7.750
E	40.54	1.596
F	–	–
G	–	–
H	20.57	0.810
J	65.07	2.562
K	100.84	3.970
L	65.02	2.560

SIDE VIEW

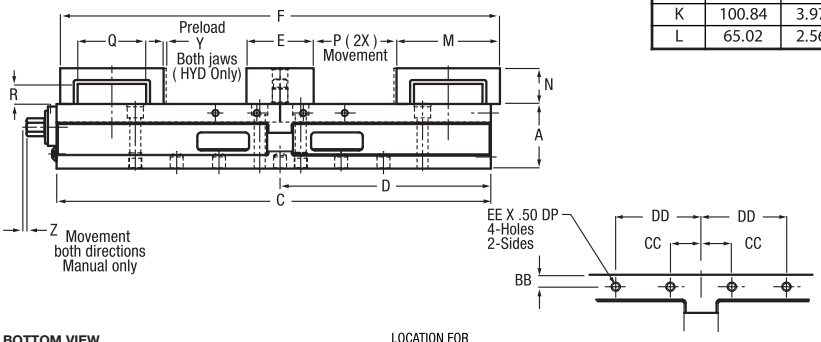

BOTTOM VIEW

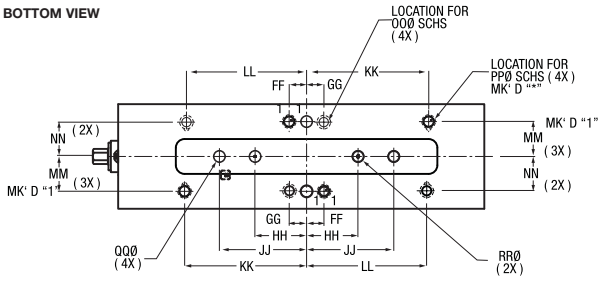

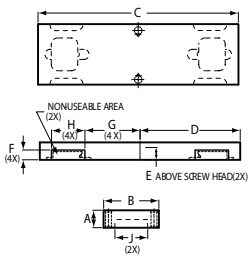

Dimensional Data High Density 4" Full OpenVise HDL Manual & Hydraulic				
	HDLM4		HDHLM4	
	MM	Inch	MM	Inch
A	60.325	2.375	60.325	2.375
B	101.600	4.000	101.600	4.000
C	415.925	16.375	415.925	16.375
D	200.025	7.875	200.025	7.875
E	63.500	2.500	63.500	2.500
F	418.287	16.468	418.287	16.468
G	209.144	8.234	209.144	8.234
H	33.680	1.326	–	–
J	9.855	0.388	–	–
K	41.275	1.625	41.275	1.625
L	82.550	3.250	82.550	3.250
M	101.600	4.000	101.600	4.000
N	35.560	1.400	35.560	1.400
O	101.600	4.000	101.600	4.000
P	75.794	2.984	75.794	2.984
Q	65.075	2.562	65.075	2.562
R	20.625	0.812	20.625	0.812
S	7.722	0.304	7.722	0.304
T	14.275 EXT HEX	0.562 EXT HEX	7/16 – 20 UNF O-RING PORT	7/16 – 20 UNF O-RING PORT
U	9.525	0.375	9.525	0.375
V	42.875	1.688	42.875	1.688
W	63.500	2.500	63.500	2.500
X	M8 x 1.25	M8 x 1.25	M8 x 1.25	M8 x 1.25
Y	–	–	3.175	0.125
Z	3.048	0.120	–	–
AA	11.099 INT HEX	0.437 INT HEX	11.900 INT HEX	0.437 INT HEX
BB	9.525	0.375	9.525	0.375
CC	34.325	1.375	34.325	1.375
DD	65.100	2.563	65.100	2.563
EE	M8 x 1.25	M8 x 1.25	M8 x 1.25	M8 x 1.25
FF	19.050	0.750	19.050	0.750
GG	20.000	0.787	20.000	0.787
HH	100.000	3.937	100.000	3.937
JJ	133.350	5.250	133.350	5.250
KK	133.350	5.250	133.350	5.250
LL	100.000	3.937	100.000	3.937
MM	38.100	1.500	38.100	1.500
NN	40.000	1.575	40.000	1.575
OO	M8 SHCS	M8 SHCS	M8 SHCS	M8 SHCS
PP	5/16 SHCS	5/16 SHCS	5/16 SHCS	5/16 SHCS
QQ	15.875	0.625	15.875	0.625
RR	16.000	0.6299	16.000	0.6299
SS	48.260	1.900	48.260	1.900
TT	20.422	0.804	20.422	0.804
	34 lbs/15.42 kgs		33 lbs/14.96 kgs	
Estimated Shipping Weight of Vise Body Only				

HDL AngLock® Vise (6 inch)

MANUAL & HYDRAULIC

The HDL Anglock® Vises are high density long vises with two clmping stations. They provide repeatable clamping to 0.0002" and combine high density with heavy duty features. Designed on a rugged 80,000 PSI ductile iron body with steel components, both models provide strength, rigidity and long term accuracy while absorbing machining vibration.

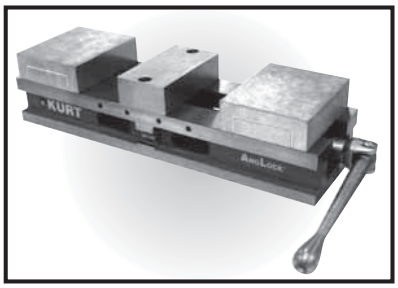

Features

- Two clamping stations – repeatable clamping to 0.0002".
- Full 4" opening in each station with standard hard jaw system.
- Jaws are indexable 180 degrees.
- Manual and hydraulic models available.
- Fast easy conversion between manual and hydraulic models. Part # HDHLM6-3-SA-KIT.
- Maximizes the number of parts in the work envelope.
- Adjustable pre-load feature allows you to minimize pre-load range thus reducing the turns of the handle to open or close the vise (manual version).
- Holding block features the ability to clamp same or dissimilar sized parts and provides pre-loading ability in the front or back jaw (manual version).
- Lifetime Iron Clad Warranty.

Jaws for HDL Vises are sold separately and available with the following options.
• Hard Jaws
• Machinable Aluminum Jaws
• Machinable Ductile Iron Jaws
• Aluminum Fixture Plate

Dimensional Data High Density 6" Full Open Vise HDL Manual & Hydraulic								
	OPTIONAL HARD JAWS HDLM6J-JAWKIT Shipping Weight 11.79kgs/26lbs				Convertible OPTION HARD AND CARVABLE JAWS			
	HDLM6J		HDHLM6J		HDLM6J		HDHLM6J	
	MM	Inch	MM	Inch	MM	Inch	MM	Inch
A	68.326	2.690	68.326	2.690	271.526	10.690	271.526	10.690
B	101.600	4.000	101.600	4.000	68.326	2.690	68.326	2.690
C	101.600	4.000	101.600	4.000	289.941	11.415	289.941	11.415
D	37.719	1.485	37.719	1.485	391.541	15.415	391.541	15.415
E	152.400	6.000	152.400	6.000	308.356	12.140	308.356	12.140
F	18.415	0.725	18.415	0.725	105.156	4.140	105.156	4.140
G	44.069	1.735	44.069	1.735	86.741	3.415	86.741	3.415
H	–	–	3.175	0.125	188.341	7.415	188.341	7.415
J	98.425	3.875	98.425	3.875	274.574	10.810	274.574	10.810
K	23.876	0.940	23.876	0.940	77.775	3.062	77.775	3.062
L	M12x1.75	M12x1.75	M12x1.75	M12x1.75	528.574	20.810	528.574	20.810
M	151.511	5.965	151.511	5.965	331.775	13.062	331.775	13.062
N	221.615	8.725	221.615	8.725	18.542	0.730	18.542	0.730
O	271.526	10.690	271.526	10.690	23.825	0.938	23.825	0.938
P	–	–	–	–	15.367	0.605	15.367	0.605

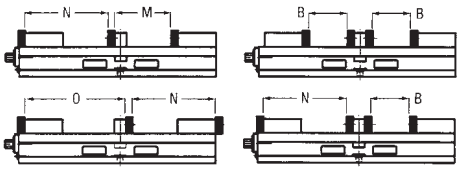

HARDENED JAW POSITIONS (MANUAL VICE SHOWN)

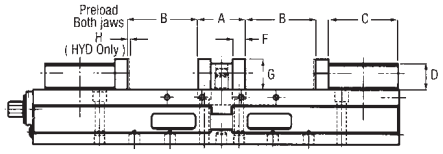

OPTIONAL HARD JAWS SHOWN (MANUAL VISE SHOWN)

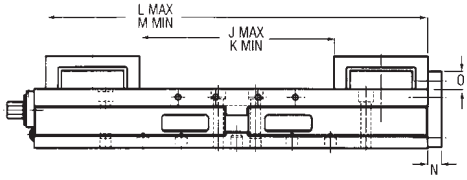

CONVERTIBLE OPTIONAL FOR CARVABLE JAWS (MANUAL VISE SHOWN)

OPTIONAL CONVERTIBLE KIT (HDLM6-CONVKIT) - JAW POSITIONS

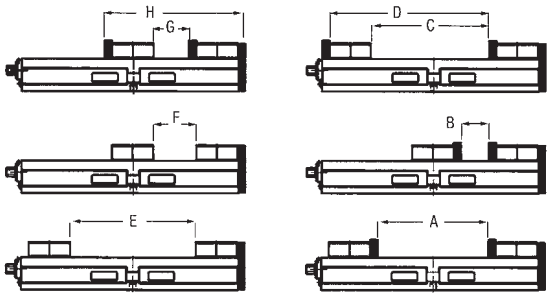

CONVERTIBLE OPTIONAL FOR HARD JAWS HDLM6J-CONVKIT (MANUAL VISE SHOWN)

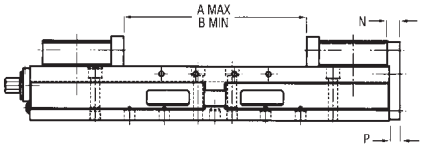

FRONT VIEW

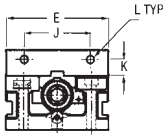

HDL AngLock® Vise (6 inch)

MANUAL & HYDRAULIC

ACCESSORY JAWKIT WITH OPTIONAL 2.5 HEIGHT JAW

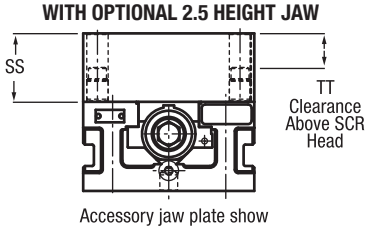

CLAMPING FORCE LBS.			
Torque-Ft. Lbs.	HDLM6	Hydraulic PSI	HDHLM6
10	1,540	500	875
20	2,520	1000	1,600
30	3,350	1500	2,330
40	4,310	2000	3,130
50	5,750	2500	3,950
60	6,860	3000	4,750
70	7,460	3500	5,475
80	8,410	4000	6,350

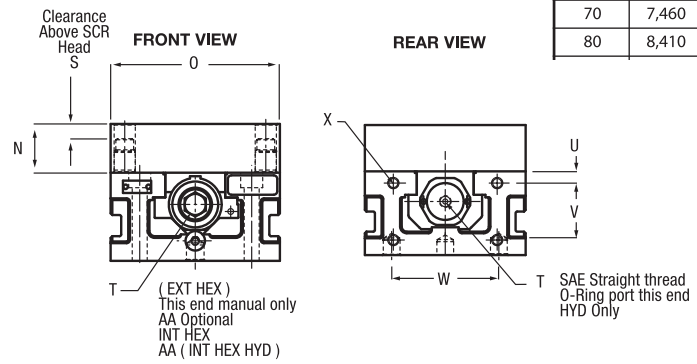

TOP VIEW

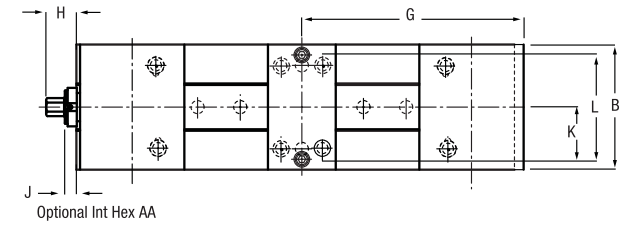

Aluminum Fixture Plate Accessory for HDLM Vise & CTHDLM Tower 6"		
	HDL6ALP619-239	
	mm	inch
A	48.260	1.900
B	152.400	6.000
C	508.000	20.000
D	254.000	10.000
E	30.988	1.220
F	24.613	0.969
G	138.938	5.470
H	84.125	3.312
J	82.550	3.250

SIDE VIEW

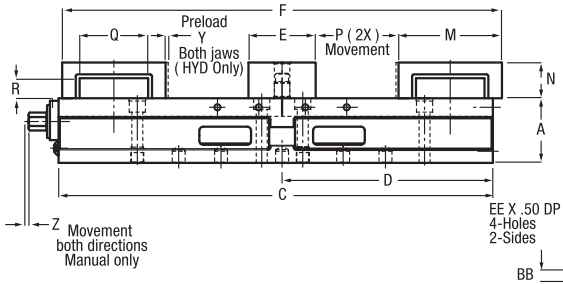

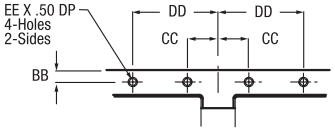

BOTTOM VIEW

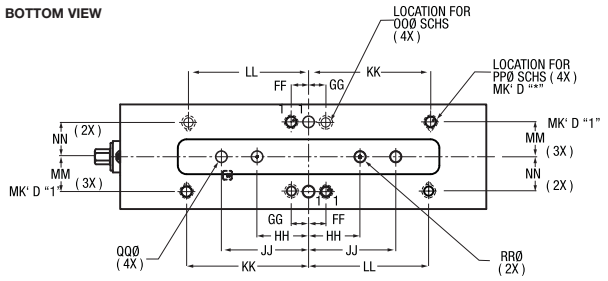

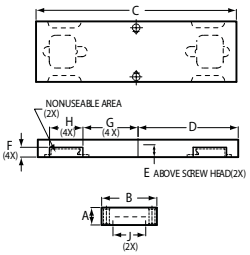

Dimensional Data High Density 6" Full OpenVise HDL Manual & Hydraulic				
	HDLM6		HDHLM6	
	MM	Inch	MM	Inch
A	79.375	3.125	79.375	3.125
B	152.400	6.000	152.400	6.000
C	533.400	21.000	533.400	21.000
D	258.877	10.192	258.877	10.192
E	82.550	3.250	82.550	3.250
F	539.750	21.250	539.750	21.250
G	269.875	10.625	269.875	10.625
H	36.830	1.450	–	–
J	21.844	0.860	–	–
K	63.500	2.500	63.500	2.500
L	127.000	5.000	127.000	5.000
M	127.000	5.000	127.000	5.000
N	43.891	1.728	43.891	1.728
O	152.400	6.000	152.400	6.000
P	101.600	4.000	101.600	4.000
Q	84.125	3.312	84.125	3.312
R	24.613	0.969	24.613	0.969
S	13.259	0.522	13.259	0.522
T	19.050 EXT HEX	0.750 EXT HEX	7/16-20 UNF O-RING PORT	7/16-20 UNF O-RING PORT
U	11.125	0.438	11.125	0.438
V	53.975	2.125	53.975	2.125
W	98.425	3.875	98.425	3.875
X	M10x1.5	M10x1.5	M10x1.5	M10x1.5
Y	–	–	3.175	0.125
Z	3.962	0.156	–	–
AA	15.875 INT HEX	0.625 INT HEX	15.875 INT HEX	0.625 INT HEX
BB	11.125	0.438	11.125	0.438
CC	28.575	1.125	28.575	1.125
DD	79.375	3.125	79.375	3.125
EE	M8x1.25	M8x1.25	M8x1.25	M8x1.25
FF	25.400	1.000	25.400	1.000
GG	25.000	0.984	25.000	0.984
HH	75.000	2.9528	75.000	2.9528
JJ	127.000	5.000	127.000	5.000
KK	177.800	7.000	177.800	7.000
LL	175.000	6.890	175.000	6.890
MM	50.800	2.000	50.800	2.000
NN	50.000	1.969	50.000	1.969
OO	M12 SHCS	M12 SHCS	M12 SHCS	M12 SHCS
PP	1/2 SCHS	1/2 SCHS	1/2 SCHS	1/2 SCHS
QQ	15.875	0.625	15.875	0.625
RR	16.000	0.6299	16.000	0.6299
SS	60.960	2.400	60.960	2.400
TT	30.328	1.194	30.328	1.194
	32.21 kgs/71 lbs		31.75 kgs/70 lbs	
EstimatedShippingWeightof Vise Body Only				

CARVLOCK™ CLUSTERTOWER™

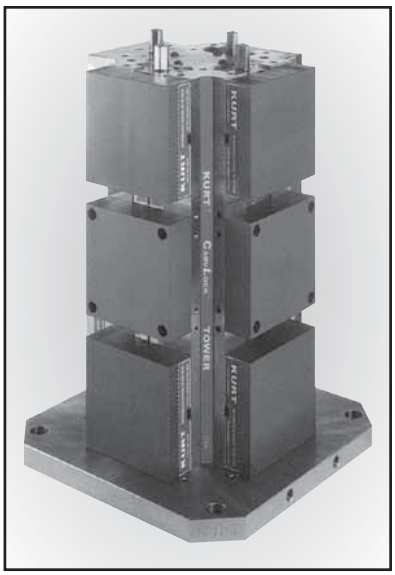

CTU6™ Shown with DLU6ALU Jaw Kit Assembly

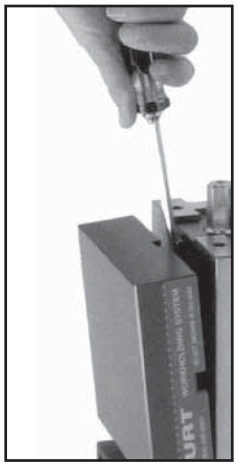

Fast. Change all three jaws in a minute.

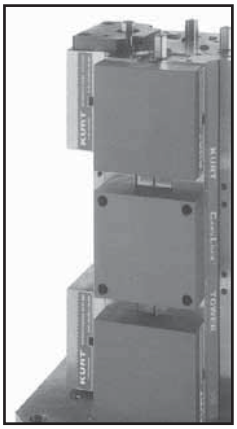

CTU6 shown with conversion kit (CTCU6-KIT) assembly for single station vise application.

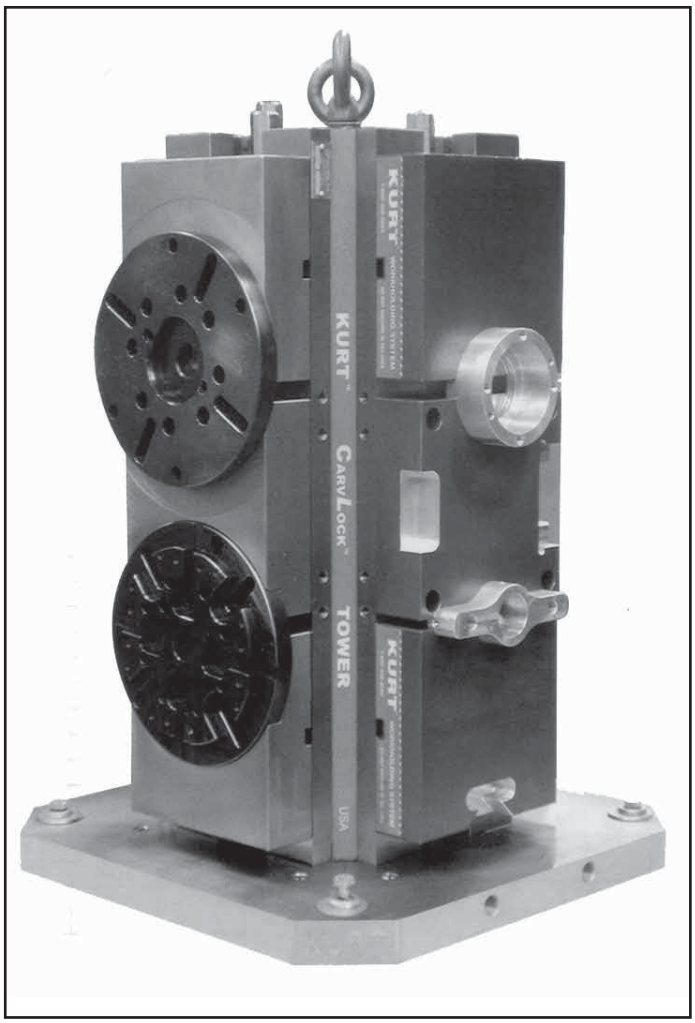

ClusterTower provides flexible holding options as shown in photo. Jaws on right are machinable aluminum, on left are machinable ductile iron.

CTU4300
CTU4400
CTU4500
CTU6400
CTU6500
CTU6630

Features:

- Cast iron integral vise tower - highly rigid to achieve workpiece immobility and to dampen cutter induced vibration. Ideal for today's high speed spindles.
- The most versatile high density tower system in the market.
- Four different jaw systems available - machinable aluminum or ductile iron jaws (in three heights), EZLock quick-change jaw plate system, and standard hard jaw plates.
- Center clamping area is fully covered 100% of the time.
- Famous Anglock design - minimizes movable jaw lift.
- Stationary and movable jaws repeatable to .001".
- Change jaw set in 1 minute.
- Hold multiple parts in eight clamping stations. Increase your part volume.
- Three standard base sizes. Custom bases available.
- Optional 4" conversion kit. (CTCU4-Kit)
- Optional 6" conversion kit. (CTCU6-Kit)
- Optional internal hex available.
- Metric version available.

TECHLEADER® TOOLING INC.

KURT

CARVLOCK™ CLUSTERTOWER™

VISE CLAMPING FORCE - LBS.			
Torque Ft.-Lbs.	CTU4300	CTU4400	CTU4500
10	1,039	1,039	1,039
20	2,147	2,147	2,147
30	3,018	3,018	3,018
40	3,943	3,943	3,943
50	4,709	4,709	4,709
60	5,694	5,694	5,694

DIMENSIONAL DATA			
	CTU4300	CTU4400	CTU4500
A	300MM	400MM	500MM
B	1.000	1.250	1.250
C	0.790	1.970	2.360
D	6.250	6.250	6.250
E	4.000	4.000	4.000
F	5.000	6.299	7.874
G	10.000	12.598	15.748
H	N/A	6.250	8.000
J	N/A	12.500	16.000
K	1/2	5/8	5/8
L	N/A	1/2	1/2
M	0.590	0.708	0.708
N	1.575	N/A	N/A
O	3.150	N/A	N/A
P	1/2-13	N/A	N/A
Q	N/A	2.165	2.165
R	N/A	4.330	4.330
S	N/A	2.953	2.953
T	N/A	5.906	5.906
U	N/A	5/8-11	5/8-11
V	N/A	.984	.984
W	16.240	16.240	16.240
X	15.200	15.200	15.200
Y	7.532	7.532	7.532
Z	0.562	0.562	0.562
AA	15.063	15.063	15.063
BB	9/16	9/16	9/16
CC	7/16	7/16	7/16
DD	0.600	0.600	0.600
EE	2.094	2.094	2.094
FF	5.844	5.844	5.844
GG	3.188	3.188	3.188
HH	7.079	7.079	7.079
JJ	3.188	3.188	3.188
KK	7.063	7.063	7.063
LL	2.124	2.124	2.124
MM	5.816	5.816	5.816
Est Ship Wt Lbs	350	395	515

TOP VIEW

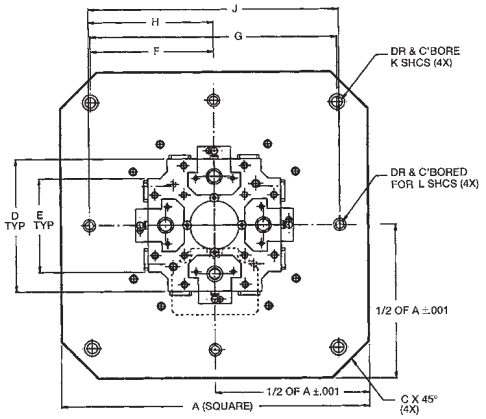

SIDE VIEW

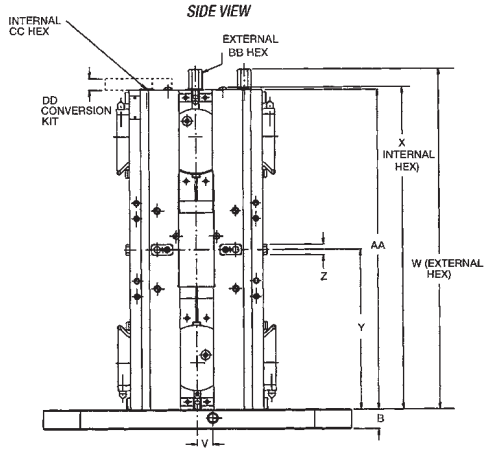

CONVERSION KIT JAW POSITIONS

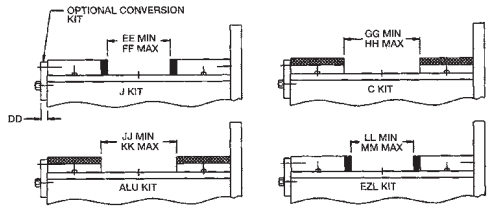

400 & 500 BASE PLATE ONLY

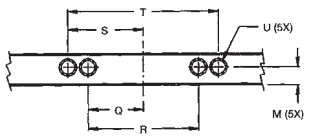

630 BASE PLATE ONLY

JAW KITS for CARVLOCK™ TOWER™

DLU4ALU - Jaw Kit
DLU6ALU - Jaw Kit

Quick Change, Machinable Soft Jaws

Features:
- 90 degree indexable soft jaws (6061 - T6 Aluminum) can be machined to fit the shape of your part for inexpensive dedicated fixturing.
- Movable jaw blocks are indexable and machinable on all four sides. Allows machining over bolt holes in stationary jaw.
- Stationary jaws are keyed to the vise base for repeatability within .001”

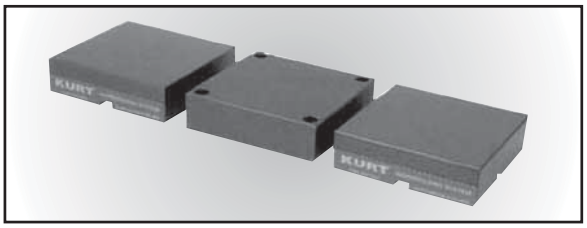

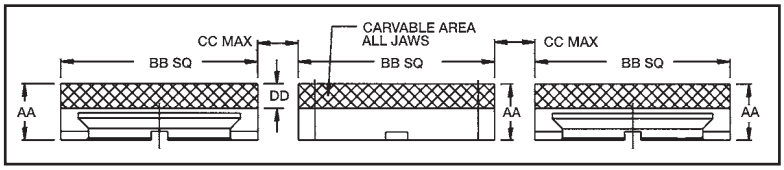

DLU4C - Jaw Kit
DLU6C - Jaw Kit

Quick Change, Machinable Ductile Iron Jaws

Features:
- Movable jaw blocks are indexable and machinable on all four sides. Allows machining over bolt holes in stationary jaw.
- Movable and stationary jaws may be heat treated for longer life.
- Stationary jaws are keyed to the vise base for repeatability within .001”

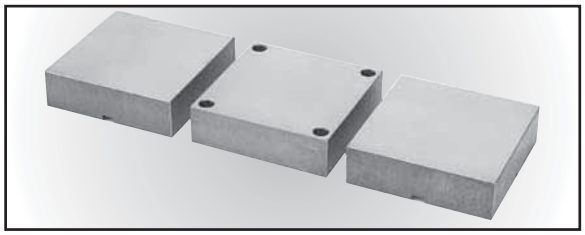

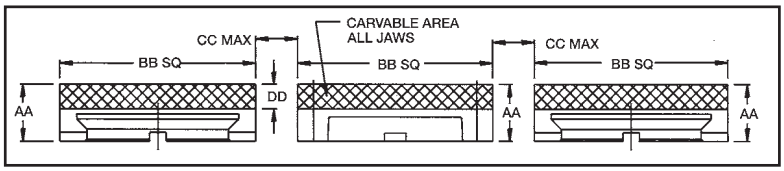

DLU6EZL - Jaw Kit

New EZLock Quick Change Jaw Plate System

Features:
- Jaws utilize EZLock quick change jaw plates.
- Unique jaw plate locating groove assures repeatability of .0005” or less in repeat set-ups.
- Jaw plates lock/unlock from top of vise
- EZLock jaw plates will accept new Groove Lock workstops.
- Stationary jaws are keyed to the vise base for repeatability within .001”

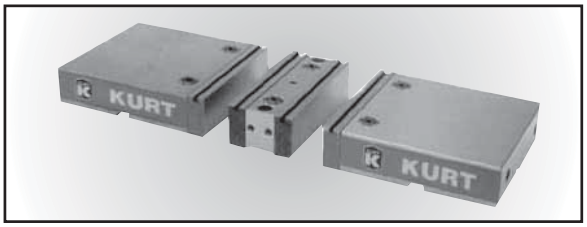

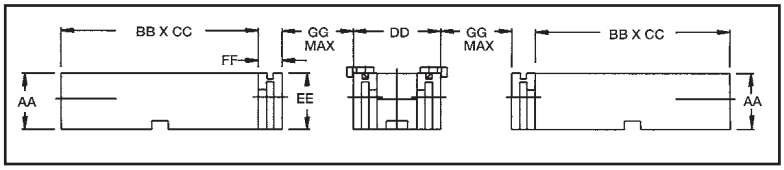

DLU6J - Jaw Kit

Standard Jaws

Features:
- Hardened steel jaw plates.
- Stationary and movable jaws 1.78” high. Extra height allows higher clamping with less jaw deflection.
- Stationary jaws are keyed to the vise base for repeatability within .001”

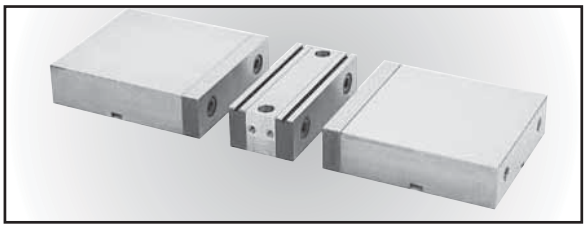

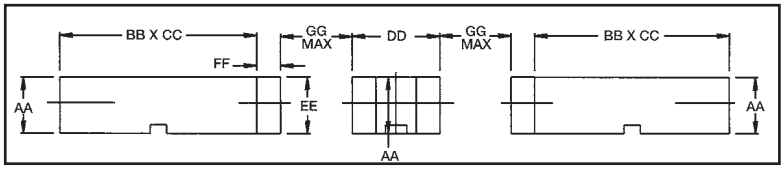

HDL CarvLock™ Tower™ (4 inch)

Models: CTHDLM443, CTHDLM444, CTHDLM445

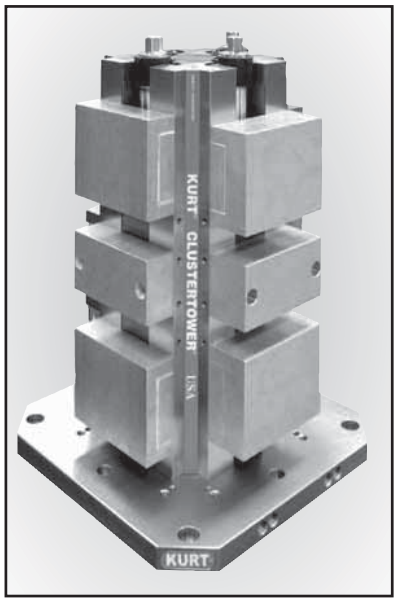

CTHDLM444AL (shown with optional machinable aluminum jaws)

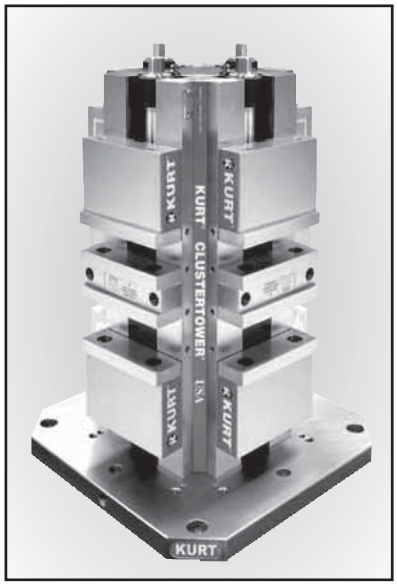

CTHDLM444AL (shown with optional machinable aluminum jaws)

This manually operated, eight station HDL Cluster Tower system features a ductile iron integral vise tower. Designed for use on mid-size and larger machining centers including horizontal and vertical machining centers with a fourth axis and indexable tables. This workholding system achieves workpiece immobility while damping cutter induced vibration.

Features:

- High density vise tower system. Hold multiple parts in eight clamping stations. Increase part volume.
- Repeatable clamping to 0.0002”. Each station delivers up to 5,870 lbs. of clamping force at 60 ft lbs of torque.
- Self-adjusting holding block of either front or back jaw for clamping the same or dissimilar sized parts. To further enhance fast operation, an adjustable pre-load feature reduces handle turns for opening and closing clamping stations.
- Ductile iron column insures strength, rigidity and long term accuracy.
- Jaw options available to fit your application. Select from Hard jaws, Machinable aluminum jaws, Machinable ductile Iron jaws.
- Jaws are indexable 180 degrees.
- Base sizes available include: 300mm, 400mm, 500mm.
- Elevated column makes clearing chips and contaminants fast and easy.
- Lifetime Iron Clad Warranty.

CLAMPING FORCE LBS.			
Torque-Ft. Lbs.	HDLM4	Hydraulic PSI	HDHLM4
10	1,040	1,000	775
20	2,125	1,500	1,450
30	3,140	2,000	1,900
40	4,040	2,500	2,550
50	4,980	3,000	3,100
60	5,870	3,500	3,700
		4,000	4,200
		4,500	4,800

Jaws for HDL Towers are sold separately and available with the following options.

- Hard Jaws
- Machinable Aluminum Jaws
- Machinable Ductile Iron Jaws
- Aluminum Fixture Plate

TECHLEADER® TOOLING INC.

KURT

HDL CARVLOCK™ TOWER™ (4 inch)

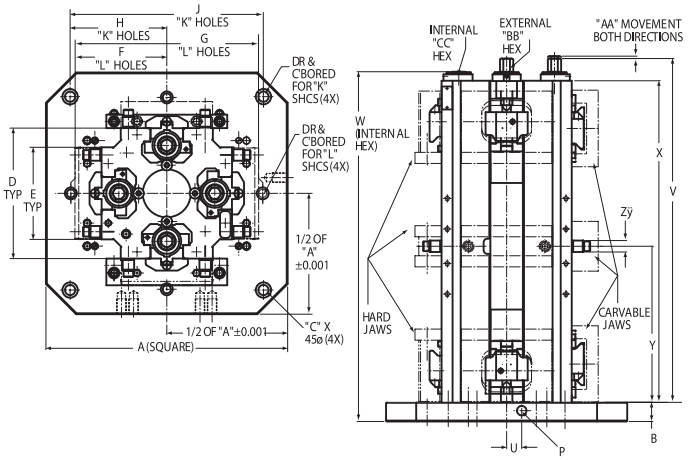

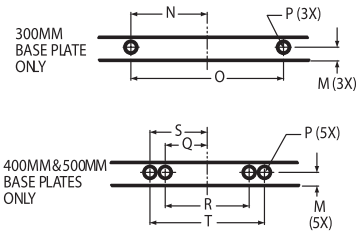

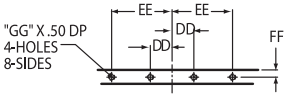

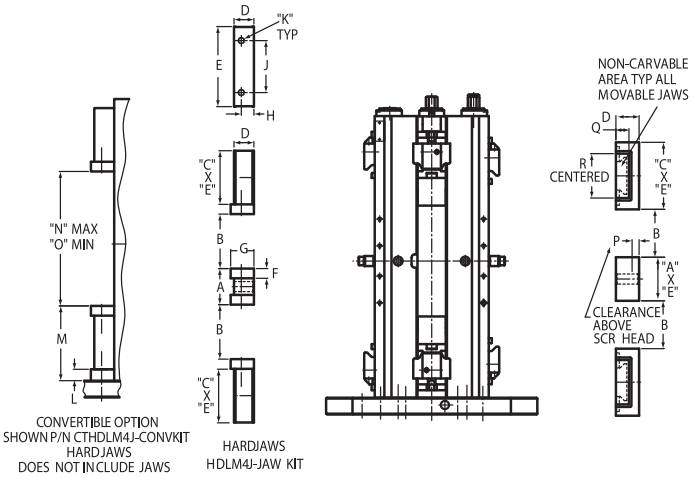

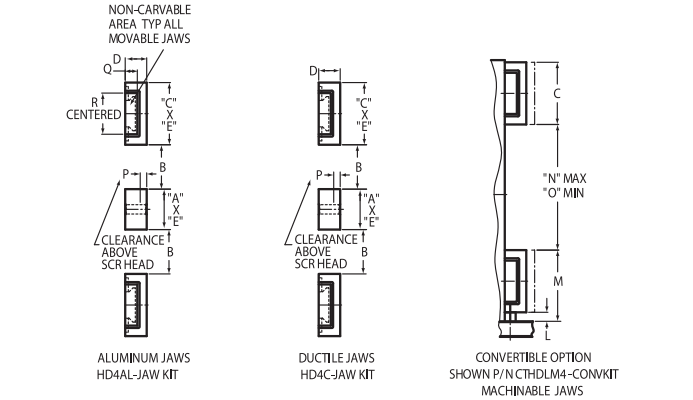

Dimensional Data HDL Long Cluster Tower

	CTHDLM443		CTHDLM444		CTHDLM445	
	MM	Inch	MM	Inch	MM	Inch
A	300.00	11.811	400.00	15.748	500.00	19.685
B	25.40	1.000	31.750	1.250	31.75	1.250
C	20.00	0.790	50.00	1.970	60.00	2.360
D	158.75	6.250	158.75	6.250	158.75	6.250
E	101.60	4.000	101.60	4.000	101.60	4.000
F	158.75	6.250	203.20	8.000	203.20	8.000
G	–	–	317.50	12.500	406.40	16.000
H	127.00	5.000	160.00	6.299	200.00	7.874
J	254.00	10.000	320.00	12.598	400.00	15.748
K	M12SHCS	1/2 SHCS	M16SHCS	5/8 SHCS	M16SHCS	5/8 SHCS
L	–	–	M12SHCS	1/2 SHCS	M12SHCS	1/2 SHCS
M	15.00	0.590	18.000	0.709	18.000	0.709
N	40.00	1.575	–	–	–	–
O	80.00	3.150	–	–	–	–
P	M12 x 1.75	–	M16 x 2.0	–	M16 x 2.0	–
Q	–	–	55.00	2.165	55.00	2.165
R	–	–	110.00	4.330	110.00	4.330
S	–	–	75.00	2.953	75.00	2.953
T	–	–	150.00	5.906	150.00	5.906
U	00.00	0.000	25.00	0.984	25.00	0.984
V	449.60	17.701	449.60	17.701	449.60	17.701
W	451.18	17.763	457.53	18.013	457.53	18.013
X	415.92	16.375	415.92	16.375	415.92	16.375
Y	200.03	7.875	200.03	7.875	200.03	7.875
Z	15.00	0.590	15.00	0.590	15.00	0.590
AA	3.05	0.120	3.05	0.120	3.05	0.120
BB	14.28 EXT HEX	0.562 EXT HEX	14.28 EXT HEX	0.562 EXT HEX	14.28 EXT HEX	0.562 EXT HEX
CC	11.10 INT HEX	0.437 INT HEX	11.10 INT HEX	0.437 INT HEX	11.10 INT HEX	0.437 INT HEX
DD	34.92	1.375	34.92	1.375	34.92	1.375
EE	65.10	2.563	65.10	2.563	65.10	2.563
FF	9.53	0.375	9.53	0.375	9.53	0.375
GG	M8 x 1.25	–	M8 x 1.25	–	M8 x 1.25	–

Jaw Accessories

	HARD JAWS		ALUMINIUM JAWS			
	HDLM4J-Jaw Kit		HDLM4L-Jaw Kit		HDLM4L1.9-Jaw Kit	
	MM	Inch	MM	Inch	MM	Inch
A	59.538	2.344	63.500	2.500	63.500	2.500
B	76.200	3.000	66.675	2.625	66.675	2.625
C	73.812	2.906	101.600	4.000	101.600	4.000
D	28.321	1.115	35.560	1.400	48.260	1.900
E	101.600	4.000	101.600	4.000	101.600	4.000
F	13.894	0.547	–	–	–	–
G	31.369	1.235	–	–	–	–
H	17.450	0.687	–	–	–	–
J	63.500	2.500	–	–	–	–
K	M10 x 1.50	–	–	–	–	–
L	–	–	–	–	–	–
M	–	–	–	–	–	–
N	–	–	–	–	–	–
O	–	–	–	–	–	–
P	–	–	7.722	0.304	20.422	0.804
Q	–	–	20.625	0.812	20.625	0.812
R	–	–	65.075	2.562	65.075	2.562

Jaw Accessories Convertible Options

	DUCTILE JAWS		HARD JAWS		CARVABLE JAWS	
	HDM4C-Jaw Kit		CTM4300-230		CTHDLM443-338	
	MM	Inch	MM	Inch	MM	Inch
A	63.500	2.500	–	–	–	–
B	66.675	2.625	–	–	–	–
C	101.600	4.000	–	–	–	–
D	35.560	1.400	–	–	–	–
E	101.600	4.000	–	–	–	–
F	–	–	–	–	–	–
G	–	–	–	–	–	–
H	–	–	–	–	–	–
J	–	–	–	–	–	–
K	–	–	–	–	–	–
L	–	–	13.894	0.547	13.874	0.547
M	–	–	101.600	4.000	115.494	4.547
N	–	–	196.850	7.750	169.060	6.656
O	–	–	57.150	2.250	57.150	2.250
P	7.722	0.304	–	–	–	–
Q	20.625	0.812	–	–	–	–
R	65.075	2.562	–	–	–	–

HDL CarvLock™ Tower™ (6 inch)

Models: CTHDLM644, CTHDLM645, CTHDLM646

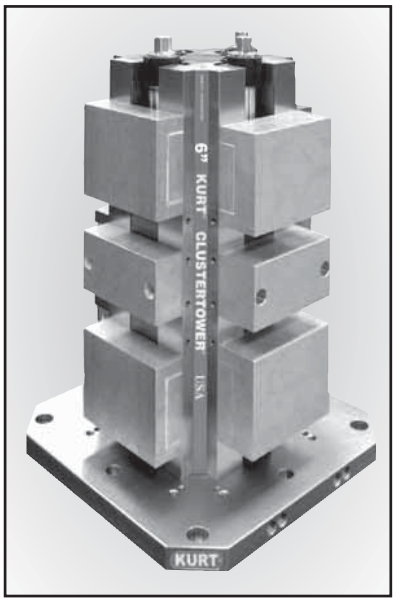

CTHDLM644AL (shown with optional machinable aluminum jaws)

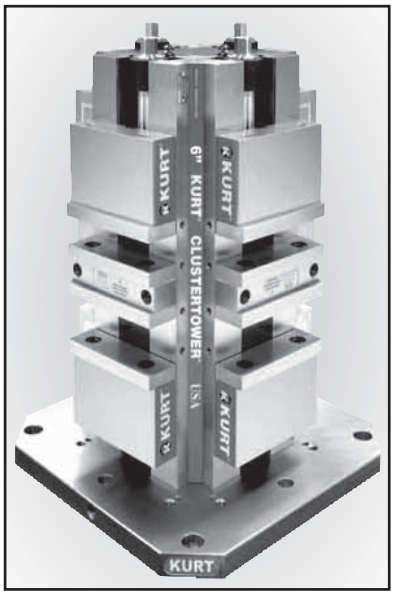

CTHDLM644AL (shown with optional machinable aluminum jaws)

This manually operated, eight station HDL Cluster Tower system features a ductile iron integral vise tower. Designed for use on mid-size and larger machining centers including horizontal and vertical machining centers with a fourth axis and indexable tables. This workholding system achieves workpiece immobility while damping cutter induced vibration.

Features:

- High density vise tower system. Hold multiple parts in eight clamping stations. Increase part volume.
- Repeatable clamping to 0.0002”. Each station delivers up to 5,870 lbs. of clamping force at 70 ft lbs of torque.
- Self-adjusting holding block of either front or back jaw for clamping the same or dissimilar sized parts. To further enhance fast operation, an adjustable pre-load feature reduces handle turns for opening and closing clamping stations.
- Ductile iron column insures strength, rigidity and long term accuracy.
- Jaw options available to fit your application. Select from Hard jaws, Machinable aluminum jaws, Machinable ductile Iron jaws and Aluminum fixture plate.
- Jaws are indexable 180 degrees.
- Base sizes available include: 400mm, 500mm, 630mm.
- Elevated column makes clearing chips and contaminants fast and easy.
- Lifetime Iron Clad Warranty.

CLAMPING FORCE LBS.			
Torque-Ft. Lbs.	HDLM6	Hydraulic PSI	HDHLM6
10	1,540	500	875
20	2,520	1000	1,600
30	3,350	1500	2,330
40	4,310	2000	3,130
50	5,750	2500	3,950
60	6,860	3000	4,750
70	7,460	3500	5,475
80	8,410	4000	6,350
90	9,790	4500	7,100
		Hyd. Displacement 1.08 cubic inches	

Jaws for HDL Towers are sold separately and available with the following options.

- Hard Jaws
- Machinable Aluminum Jaws
- Machinable Ductile Iron Jaws
- Aluminum Fixture Plate

HDL CarvLock™ Tower™ (6 inch)

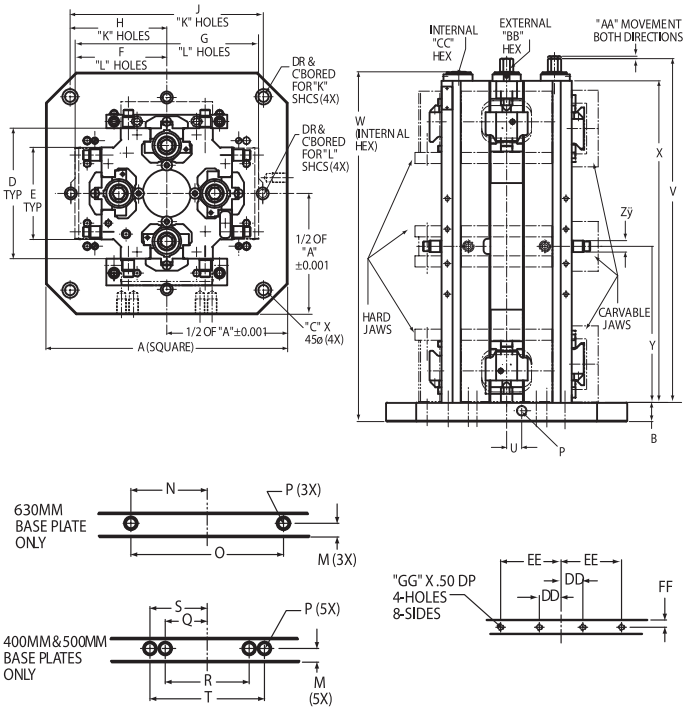

Dimensional Data HDL Long Cluster Tower						
	CTHDLM644		CTHDLM645		CTHDLM646	
	MM	Inch	MM	Inch	MM	Inch
A	400.000	15.748	500.000	19.685	630.000	24.803
B	31.750	1.250	31.750	1.250	38.100	1.500
C	50.000	1.970	60.000	2.360	70.000	2.760
D	215.900	8.500	215.900	8.500	215.900	8.500
E	152.400	6.000	152.400	6.000	152.400	6.000
F	158.750	6.250	203.200	8.000	254.000	10.000
G	317.500	12.500	406.400	16.000	508.000	20.000
H	160.000	6.299	200.000	7.874	250.000	9.842
J	320.000	12.598	400.000	15.748	500.000	19.685
K	M16SHCS	5/8 SHCS	M16SHCS	5/8 SHCS	M16SHCS	5/8 SHCS
L	M12SHCS	1/2 SHCS	M12SHCS	1/2 SHCS	M12SHCS	1/2 SHCS
M	18.000	0.709	18.000	0.709	18.000	0.709
N	–	–	–	–	100.000	3.937
O	–	–	–	–	200.00	7.874
P	M16 x 1.75	–	M16 x 2.0	–	M16 x 2.0	–
Q	55.000	2.165	55.000	2.165	–	–
R	110.000	4.330	110.000	4.330	–	–
S	75.0000	2.953	75.00	2.953	–	–
T	150.000	5.906	150.00	5.906	–	–
U	25.000	0.984	25.00	0.984	25.00	0.984
V	548.380	22.450	570.230	22.450	570.230	22.450
W	548.380	21.590	548.380	21.590	548.380	21.590
X	533.400	21.000	533.400	21.000	533.400	21.000
Y	258.880	10.192	258.880	10.192	258.880	10.192
Z	19.050	0.750	19.50	0.750	19.050	0.750
AA	3.960	0.156	3.960	0.156	3.960	0.156
BB	19.050 EXT HEX	0.750 EXT HEX	19.050 EXT HEX	0.750 EXT HEX	19.050 EXT HEX	0.750 EXT HEX
CC	15.875 INT HEX	0.625 INT HEX	15.875 INT HEX	0.625 INT HEX	15.875 INT HEX	0.625 INT HEX
DD	28.580	1.125	28.580	1.125	28.580	1.125
EE	79.380	3.125	79.380	3.125	79.380	1.125
FF	9.530	0.375	9.530	0.375	9.530	0.375
GG	M8 x 1.25	–	M8 x 1.25	–	M8 x 1.25	–

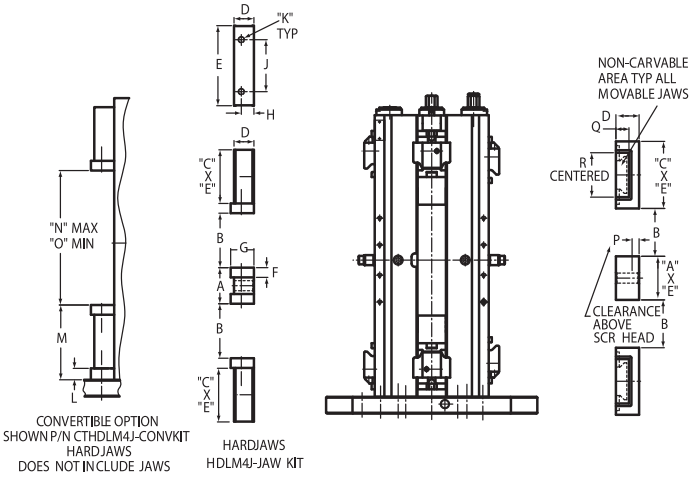

Jaw Accessories						
	HARD JAWS		ALUMINIUM JAWS			
	HDLM6J-Jaw Kit		HD6AL-Jaw Kit		HD6L2.5-Jaw Kit	
	MM	Inch	MM	Inch	MM	Inch
A	68.326	2.690	82.550	3.250	82.550	3.250
B	103.170	4.062	90.630	3.568	90.630	3.568
C	101.600	4.000	127.000	5.000	127.000	5.000
D	37.719	1.485	43.890	1.728	60.960	2.400
E	151.610	5.968	152.400	6.000	152.400	6.000
F	18.415	0.725	–	–	–	–
G	44.069	1.736	–	–	–	–
H	23.876	0.940	–	–	–	–
J	98.425	3.875	–	–	–	–
K	M10 x 1.50	–	–	–	–	–
L	–	–	–	–	–	–
M	–	–	–	–	–	–
N	–	–	–	–	–	–
O	–	–	–	–	–	–
P	–	–	13.260	0.522	30.330	1.194
Q	–	–	24.640	0.969	24.640	0.969
R	–	–	84.120	3.312	84.120	3.312

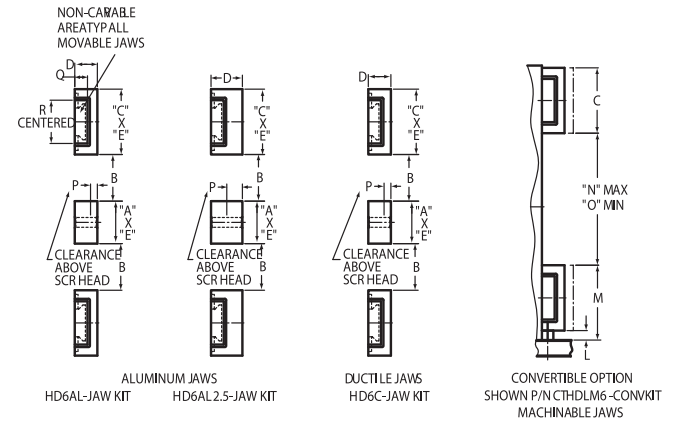

Jaw Accessories Convertible Options						
	DUCTILE JAWS		HARD JAWS		CARVABLE JAWS	
	HD6C-Jaw Kit		CTHDM6J-CONVKIT		CTHDLM6-CONVKIT	
	MM	Inch	MM	Inch	MM	Inch
A	82.550	3.250	–	–	–	–
B	90.630	3.568	–	–	–	–
C	127.000	5.000	–	–	–	–
D	43.891	1.728	–	–	–	–
E	152.400	6.000	–	–	–	–
F	–	–	–	–	–	–
G	–	–	–	–	–	–
H	–	–	–	–	–	–
J	–	–	–	–	–	–
K	–	–	–	–	–	–
L	–	–	21.590	0.850	18.415	0.725
M	–	–	141.605	5.575	145.415	5.725
N	–	–	254.640	10.025	256.540	10.100
O	–	–	68.326	2.690	79.760	3.140
P	13.260	0.522	–	–	–	–
Q	24.610	0.969	–	–	–	–
R	84.120	3.312	–	–	–	–

DOUBLELOCK® VISES

DL430™
DL800

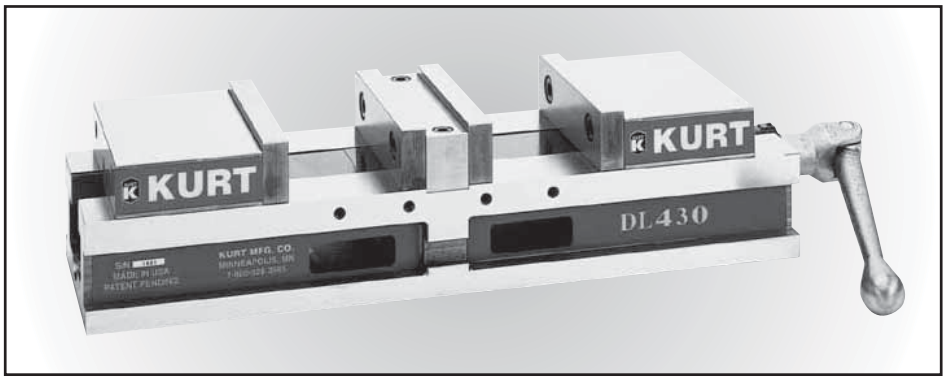

The DL430, DL640 and DL800 DoubleLock vises offer cost saving productivity by maximizing the number of parts in the work envelope.

Accessories see pages 5-130 through 5-132

Use your DoubleLock vise to it's full capacity with the DoubleLock convertible kit. The kit is available for the DL430 and DL800 vises. 1 year limited warranty.

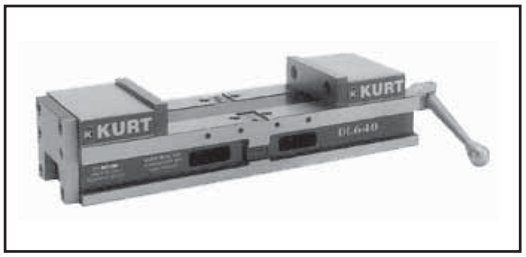

Shown with optional convertible kit.

Features:

- Large Capacity
  - DL430 3" X 4" each station.
  - DL800 6" X 8" each station.
- Productivity – multiple part workholding for better spindle utilization, reduced tool change time, and reduced machine travel from part to part.
- Accuracy – repeatable clamping to .0002".
- Durability – 80,000-PSI ductile iron body and steel components provide strength, rigidity and long term accuracy while absorbing machining vibration.
- Self-adjusting over the entire clamping range.
- Metric version available.
- Optional internal hex screw available.
- 10 year limited warranty.

OPTIONAL CONVERTIBLE KIT - JAW OPENING POSITIONS

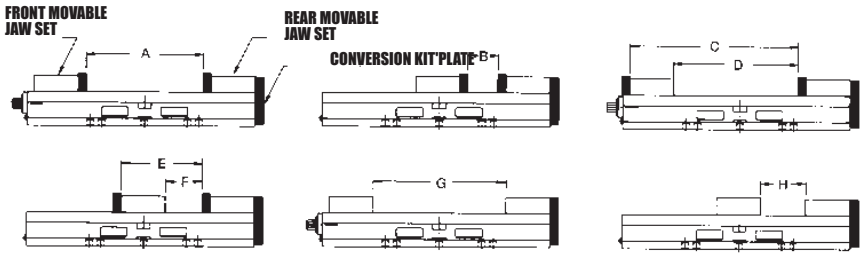

Optional Convertible kit - Jaw opening positions											
	A	B	C	D	E	F	G	H	D (A+D)	C (A)	Ship Wt. Lbs
DLC430 - KIT	8.094	2.094	11.730	8.640	5.731	2.641	9.188	3.188	–	–	2
DLC800 - KIT	8 to 12	12 to 16	17 to 21	22 to 26	24 to 28	–	–	–	18 to 22	15 to 19	20

TECHLEADER® TOOLING INC.

KURT

DOUBLELOCK VISES®

Manual

VISE CLAMPING FORCE - LBS.		
Manual Torque Ft.-Lbs.	DL430	DL800
10	1,046	
20	1,980	2,023
30	2,832	
40	3,740	3,578
50	4,523	
60		5,136
70		
80		6,883
100		8,997
120		9.817

DIMENSIONAL DATA		
	DL430	DL800
A	2.375	3.750
B	4.000	8.060
C	16.125	30.000
D	2.094	4.000
E	7.750	15.000
F	1.340	4.250
G	5/8	7/8
H	0.120	0.190
J	1.115	1.965
K	3.090	6.000
L	1.235	2.200
M	0.547	1.075
N	0.687	1.220
O	2.500	4.750
P	3/8-16	5/8-11
Q	0.375	0.750
R	1.688	2.375
S	5/16-18	1/2-13
S1	N/A	5/8-11
T	5.000	7.000
U	3.937	N/A
V	3.750	8.000
W	0.813	3.625
X	0.625	0.750
Y	0.6299	N/A
Z	7/16	N/A
AA	1.500	2.500
BB	3.000	5.000
CC	0.781	1.000
DD	3.625	7.500
EE	5/16	1/2
FF	3.000	6.000
GG	4.547	8.925
HH	6.637	13.075
JJ	8.184	16.000
KK	0.400	N/A
Ship Wt	45	250

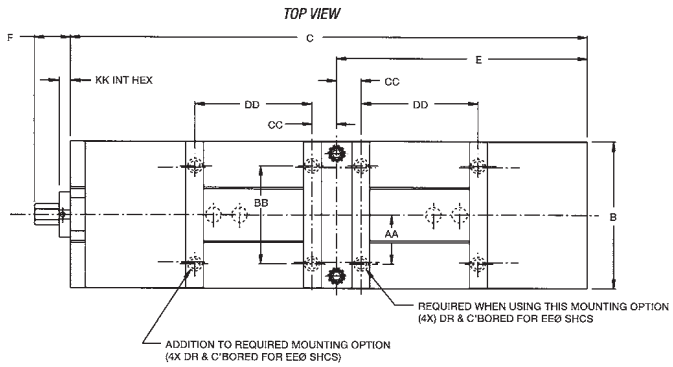

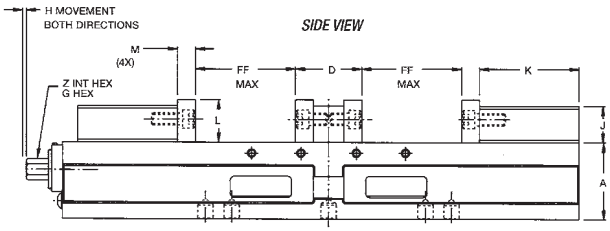

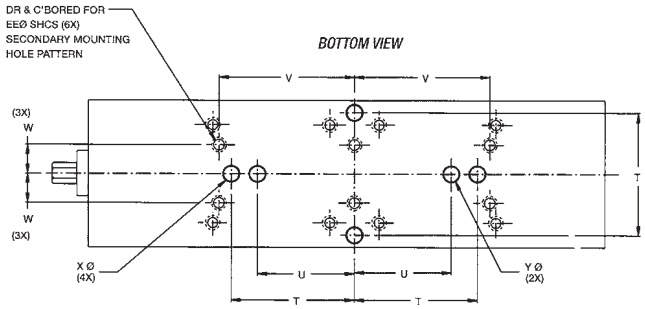

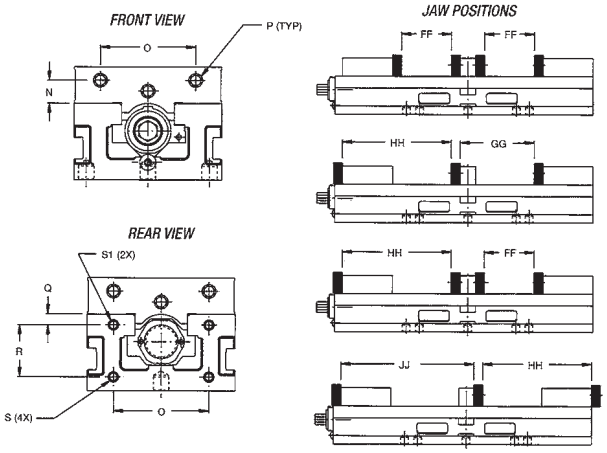

DOUBLELOCK® VISES

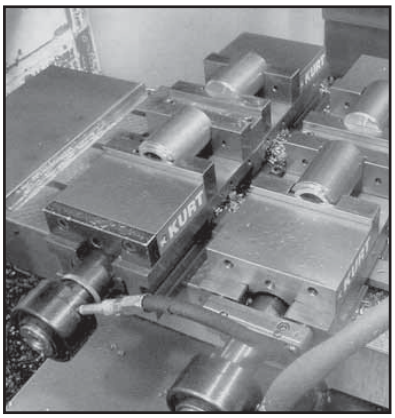

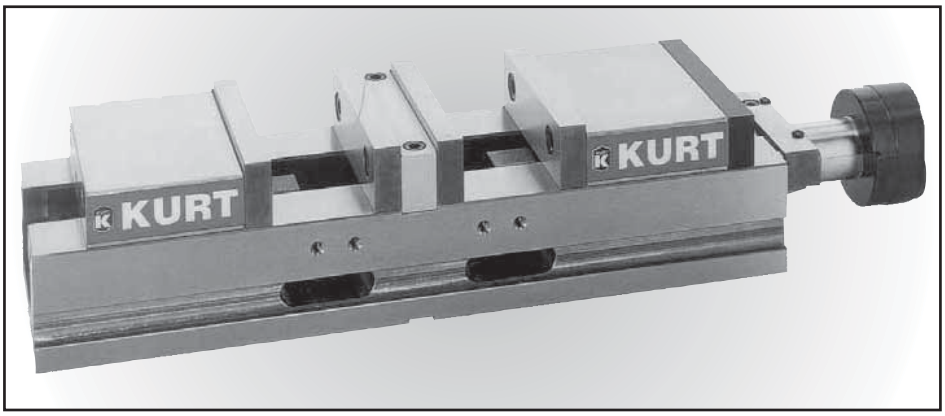

HYDRAULIC

DLH430
DLH640
DLH800

The DLH430, DLH640 and DLH800 hydraulic DoubleLock vises from Kurt offer two clamping stations with a part capacity of 3" x 4" (DLH430), 4" x 6" (DLH640), and 6" x 8" (DLH800). The hydraulic DoubleLock vise provides repeatable clamping for high accuracy machining and handles a higher horsepower cut than the manual version. The compact design features a wide range of clamping forces up to 12,600 lbs.
1/4” stroke – 1/8” per side

- Productivity – multiple part workholding for better spindle utilization, reduced tool change time, and reduced machine travel from part to part.
- Durability – 80,000-PSI ductile iron body and steel components provide strength, rigidity and long term accuracy while absorbing machining vibration.
- 10 year limited warranty.

Intensifier, APD50-112, available in either hand (APD50-112-Hand) or foot (APD50-112-Foot) option. Purchase separately for the DLH430 and DLH640 models only. Consult factory for the DLH 800 model.

TECHLEADER® TOOLING INC.

KURT

DOUBLELOCK VISES®

Hydraulic

VISE CLAMPING FORCE - LBS.			
Hydraulic PSI	DLH430	DLH640	DLH800
400	1,310	1,575	1,575
800	2,600	3,150	3,150
1200	3,900	4,725	4,725
1600	5,200	6,300	6,300
2000	6,550	7,875	7,875
2400	7,850	9,450	9,450
2800	9,150	11,025	11,025
3200	10,500	12,600	12,600

DIMENSIONAL DATA			
	DLH430	DLH640	DLH800
A	2.375	3.125	3.750
B	4.000	6.000	8.060
C	15.812	21.000	30.000
D	2.094	2.690	4.000
E	7.750	10.192	15.000
F	N/A	N/A	N/A
G	N/A	N/A	N/A
H	0.160	0.093	0.190
J	1.115	1.485	1.965
K	3.090	4.060	6.000
L	1.235	1.735	2.200
M	0.547	0.725	1.075
N	0.687	0.940	1.220
O	2.500	3.875	4.750
P	3/8-16	1/2-13	5/8-11
Q	0.375	0.438	0.750
R	1.688	2.125	2.375
S	5/16-18	3/8-16	1/2-13
S1	N/A	N/A	5/8-11
T	3.000	5.000	7.000
U	3.937	3.937	N/A
V	3.750	5.500	8.000
W	0.813	1.188	3.625
X	0.625	0.625	0.750
Y	0.6299	0.6299	N/A
AA	1.500	2.000	2.500
BB	3.000	4.000	5.000
CC	0.781	1.000	1.000
DD	3.625	4.750	7.500
EE	5/16	3/8	1/2
FF	3.000	4.000	6.000
GG	4.547	5.710	8.925
HH	6.637	8.780	13.075
JJ	8.184	10.500	16.000
KK	5.150	5.250	6.240
LL	2.938	3.325	3.375
Ship Wt	50	115	260

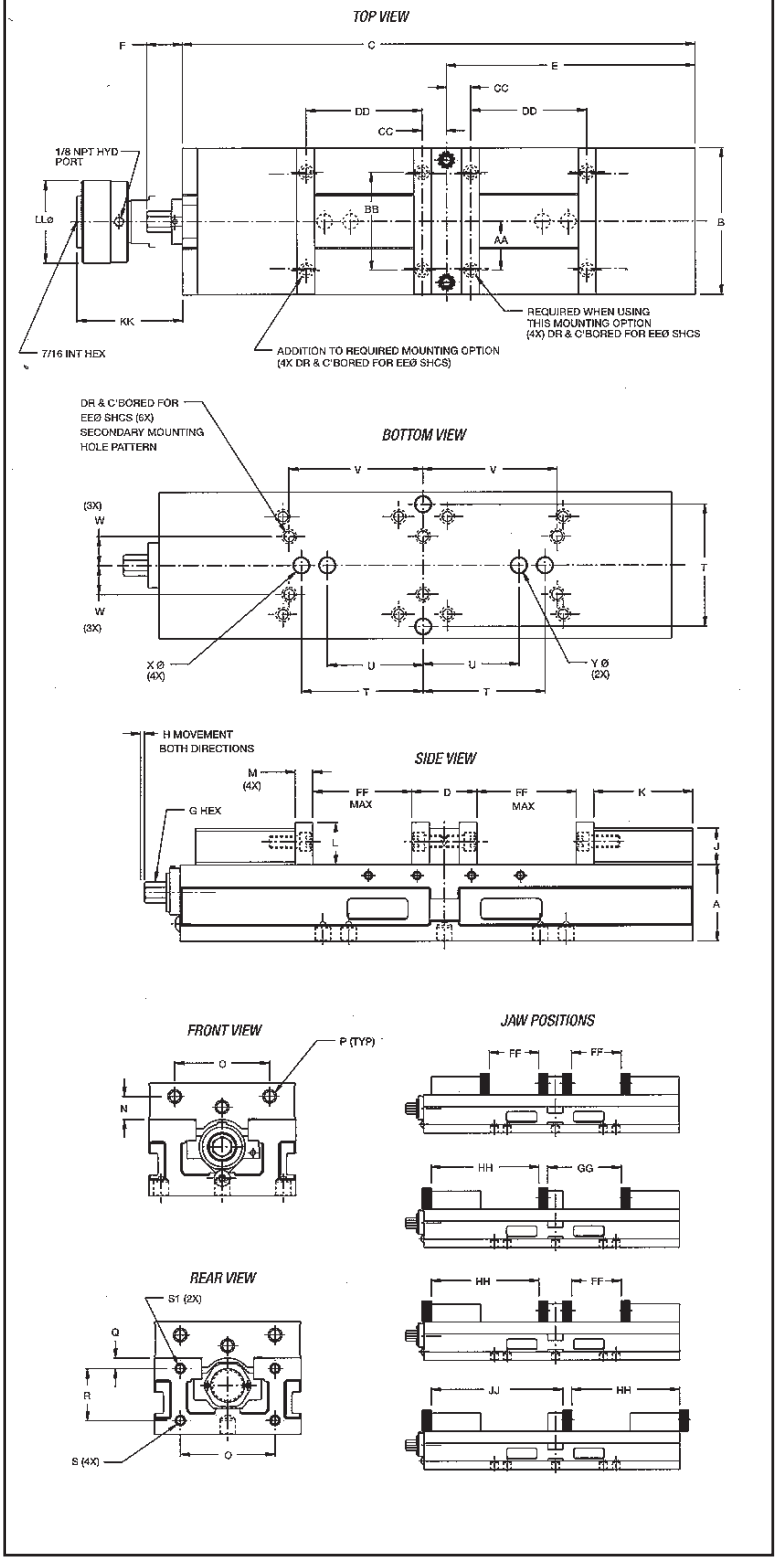

Self-Centering Vise

SCD430
SCD640

Accessories see pages 5-130 through 5-132

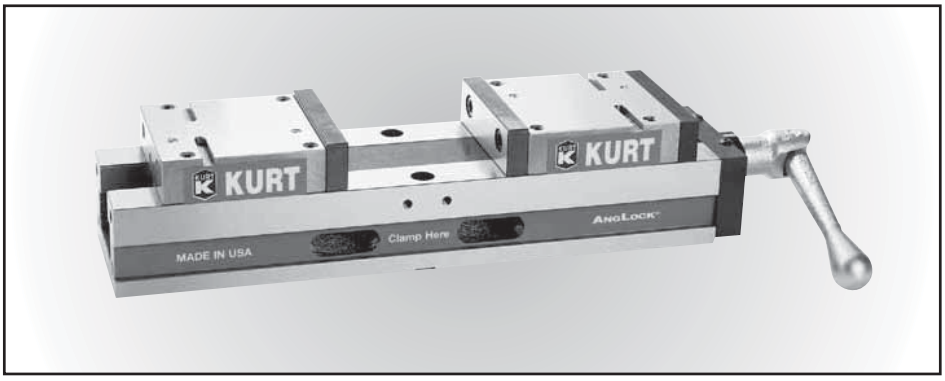

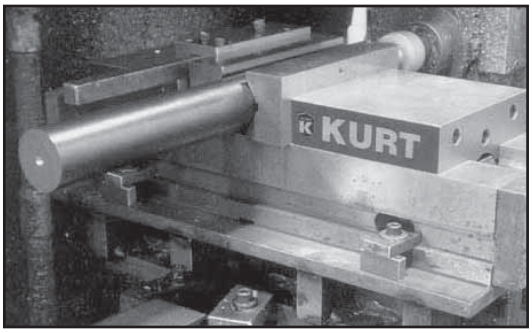

Kurt has two Self-Centering vises, a four inch jaw width (SCD430) and a six inch jaw width (SCD640). Jaw opening on the four inch model is 6.25", and 8" on the six inch. Centering accuracy from minimum to maximum opening is .0006" with .0002" repeatability. Both movable jaws are Anglock design with zero lift. With optional V-Jaws, the SCD640 can clamp a 6" diameter and the SCD430 can clamp a 4" diameter. A unique feature is an adjustment that allows the centerline of the jaws to be set. This is especially important when mounting several vises on one machine and all centerlines must match.

Features:
- Lip seals on main screw.
- Chip guards.
- Hardened jaws.
- Hardened bed ways.
- 80,000-PSI ductile iron construction.
- 10 year limited warranty.

TECHLEADER® TOOLING INC.

KURT

Self-Centering Vises

VISE CLAMPING FORCE-LBS.		
Torque	SCD430	SCD640
10	912	985
20	1,757	1,760
30	2,410	2,576
40	2,935	3,770
50	3,549	4,382
60	4,902	5,764

DIMENSIONAL DATA		
	SCD430	SCD640
A	2.375	3.125
B	4.000	6.000
C	15.000	20.500
D	7.750	10.250
E	0.5005	0.6880
F	2.440	3.000
G	9/16	3/4
H	1.115	1.485
J	4.000	5.500
K	3.000	4.000
L	0.250	0.375
M	0.188	0.250
N	0.312	0.500
O	3.000	4.000
P	3.312	5.000
Q	5/16-18	1/2-13
R	1.235	1.735
S	0.547	0.725
T	0.687	0.940
U	2.500	3.875
V	3/8-16	1/2-13
W	0.871	1.156
X	0.690	0.880
Y	0.700	0.850
Z	0.250	0.360
AA	0.550	0.690
BB	1.000	1.470
CC	0.813	1.188
DD	3.750	5.500
EE	5.000	5.000
FF	3.937	3.937
GG	0.625	0.625
HH	0.630	0.630
JJ	5/16	3/8
KK	3/8	3/8
LL	1.000	1.000
MM	6.250	8.000
NN	5.540	7.240
OO	10.790	14.240
PP	10.090	13.470
QQ	15.340	20.470
RR	3.000	5.000
Ship Wt Lbs	40	100

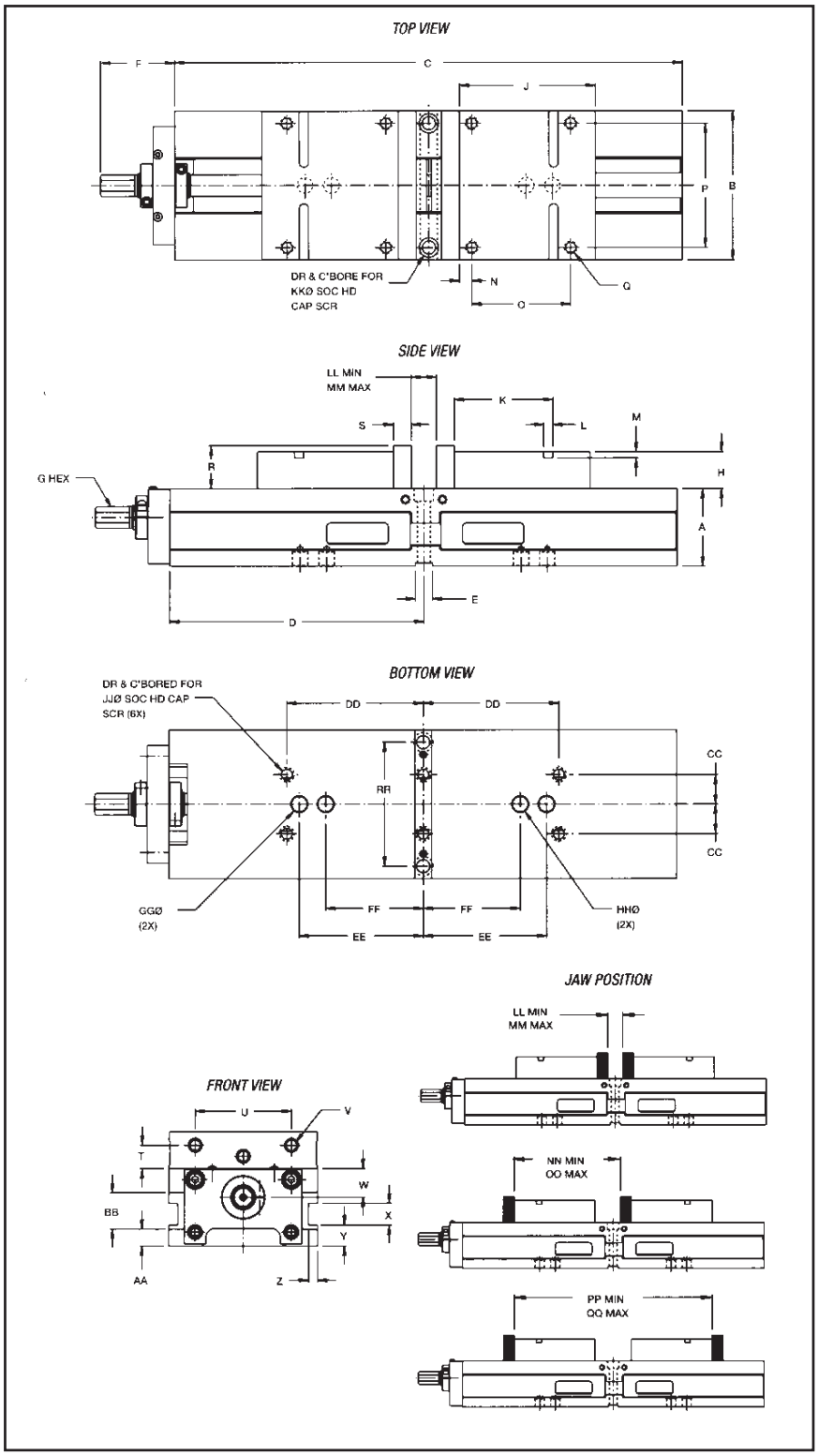

Vise Accessories

INNERLOCK™ & STANDARD VISE JAW PLATES

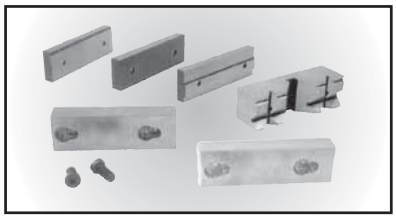

With the InnerLock jaw plates, it takes only 40 seconds to change. By minimizing down-time, the unique reversible feature saves you money on the jaw plates. Each jaw plate can be mounted in two directions, giving you two jaw plates for the price of one. For instance, the plain jaw plate when in the inverted position has a step for holding small parts closer to the spindle. Our small through-hole design allows for greater gripping surface.

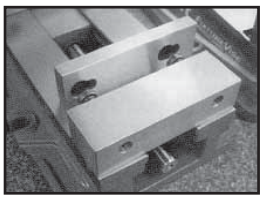

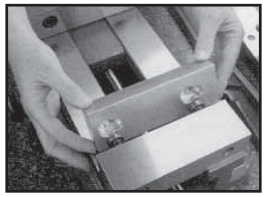

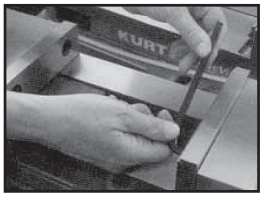

INNERLOCK Jaw Plates

Individual Jaws	4" Vise		6" Vise		8" Vise	
Jaw Type	Part #	Ship Wt.	Part #	Ship Wt.	Part #	Ship Wt.
SINGLE STEP	AJ400-32	1 LB.	AJ600-32	2 LBS.	AK800-32	6 LBS.
DOUBLE STEP	AJ400-326	1 LB.	AJ600-326	2 LBS.	AK800-326	5 LBS.
ALUMINUM	AJ400-234	1 LB.	AJ600-234	1 LB.	AK800-234	2 LBS.
SEMI HARD STEEL	AJ400-235	1 LB.	AJ600-235	3 LBS.	AK800-235	7 LBS.
SERRATED	AJ400-47	1 LB.	AJ600-47	2 LBS.	AK800-47	6 LBS.
V JAW HARDENED & GROUND	AJ400-237	2 LBS.	AJ600-237	5 LBS.	AK800-237	10 LBS.
DISPLAY BOARD	AJ400-238	11 LBS.	AJ600-238	11 LBS.	AK800-238	11 LBS.
BOLTS-D (4) PIECES	00-3353		00-3417		00-3481	
BOLTS-PT (4) PIECES	00-3353		00-3417		00-3481	
BOLTS-DL (4) PIECES	00-3348		00-3417			
BOLTS-DL (4) PIECES	00-3353	.	00-3417			

INNERLOCK JAW PLATE DIMENSIONS

	Aluminum			Soft Steel			Plain & Step				Double Step					Serrated			V-Jaw				
	W	L	H	W	L	H	W	L	H	STEP	W	L	H	ST 1	ST 2	W	L	H	W	L	H	SM ø	LG ø
AJ400	0.730	3.969	1.374	0.730	3.969	1.374	0.547	3.969	1.374	0.125	0.547	3.969	1.374	0.250	0.500	0.547	3.969	1.374	1.125	3.969	1.374	0.100	1.500
AJ600	0.980	5.969	1.880	1.125	5.969	1.880	0.725	5.969	1.880	0.188	0.735	5.969	1.880	0.375	0.750	0.725	5.969	1.880	1.880	5.969	1.880	0.125	3.000
AJ800	1.230	7.969	2.440	1.230	7.969	2.440	1.075	7.969	2.440	0.250	1.075	7.969	2.440	0.500	1.000	1.075	7.969	2.440	2.375	7.969	2.440	0.150	4.500

Standard Individual Vise Jaw Plates

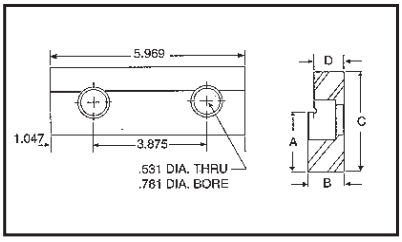

Jaw Type	3" Vise		4" Vise		5" Vise		6" Vise		8" Vise		10" Vise	
	Part #	Wt.	Part #	Wt.	Part #	Wt.	Part #	Wt.	Part #	Wt.	Part #	Wt.
HARDENED	D30-7	1 LB.	D40-7	1 LB.	D50-7	2 LBS.	D60-7	2 LBS.	D80-7	5 LBS.	D100-7	6 LBS.
SOFT	D30-7 SOFT	1 LB.	D40-7-SOFT	1 LB.	D50-7-SOFT	2 LBS.	D60-7-SOFT	2 LBS.	D80-7-SOFT	5 LBS.	D100-7-SOFT	6 LBS.
STEPPED	D30-32	1 LB.	See InnerLock		D50-32	2 LBS.	See InnerLock		See InnerLock		D100-7	6 LBS.
SERRATED	D30-47	1 LB.	See InnerLock		D50-47	2 LBS.	See InnerLock		See InnerLock		D100-47	6 LBS.

Part#	Dim "A"	Dim "B"	Dim "C"	Dim "D"	Description
60-32-1	1.693	.725	1.880	.610	STEPPED JAW
60-236-1	1.505	.725	1.880	.610	STEPPED JAW
60-236-2	1.130	.725	1.880	.610	STEPPED JAW
*60-234-1	NONE	.980	1.880	.980	ALUMINUM
*60-235-1	NONE	1.125	1.880	1.125	STEEL
60-237-1	NONE	1.875	1.635	1.875	V JAW
LP60-32	1.469	.725	1.635	.610	STEPPED JAW
*60-47-1	NONE	.725	1.735	.725	SERRATED JAW
*60-47-2	NONE	.725	1.880	.725	SERRATED JAW

*60-234-1 is a carve your own pocket jaw plate.
*60-235-1 is a carve your own pocket jaw plate.
*60-47-1 Serrations are aggressive, cut to points will mark part
*60-47-2 Serrations in both directions to .050 flats

Vise Accessories

WORKSTOPS

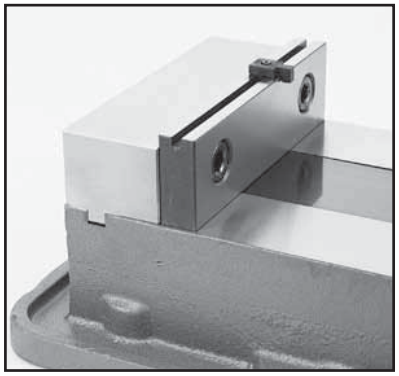

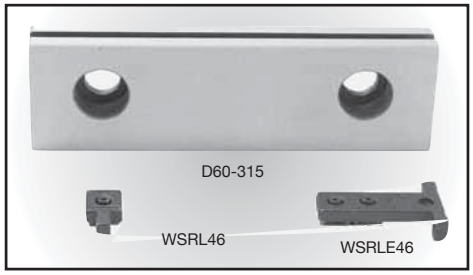

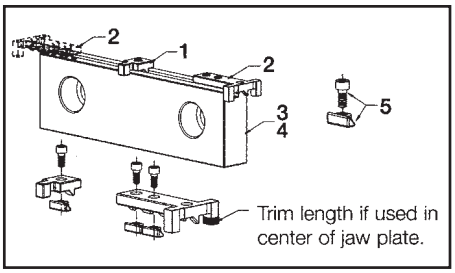

GROOVE LOCK™

Features:
- Simple, functional, integral workstop system
- Workstop does not interfere with part or spindle.
- Single bolt design for tightening workstop.
- Multiple parts can be located on the same jaw plate.

GROOVE LOCK WORKSTOP		
1	WSRL46	Workstop assembly, suitable to use with 2" thru 6" jaw plates
2	WRSLE46	Extended length workstop assembly, suitable to use with 4" thru 6" jaw on outside. Can be used on right or left end of jaw. Note: To use in center of jaw length, locating ear must be shortened to clear the top of the stationary jaw area.
3	D60-315	6" Groove Lock jaw plate (Not Reversible)
4	D40-315	4" Groove Lock jaw plate (Not Reversible)
5	WSRL46-86-SA	Replacement clamp assembly

GROOVE LOCK Reversible Style Step Jaw Plates

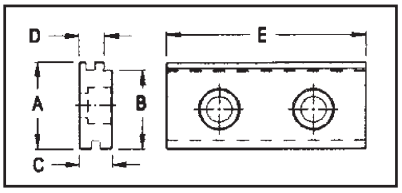

REVERSIBLE STYLE STEP JAW PLATES						
Vise Size	Part #	Dim "A"	Dim B"	Dim "C"	Dim "D"	Dim "E
2"	CL2-316	.740	.615	.647	.547	1.950
4"	D40-316	1.374	1.250	.672	.547	3.969
6"	D60-316	1.880	1.700	.735	.547	5.969

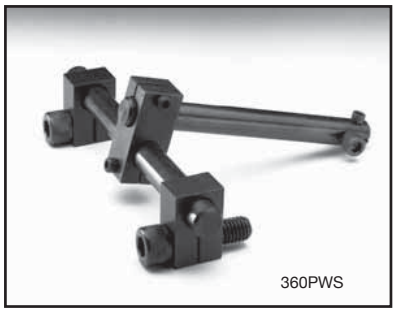
360PWS

ANGLOCK® Workstop

Versatile, quick mounting workstops will work above jaws when gang mounting vises and space for a workstop does not exist. These Kurt workstops permit fast, accurate positioning and repetitive work. They team up with your AngLock precision vise for accurate parts production.

ANGLOCK VISE WORK STOPS	
Part #	Vise Size
D30-45	4" Vises
360PWS	6" Vises
D80WS	8" Vises
D100-45	10" Vises

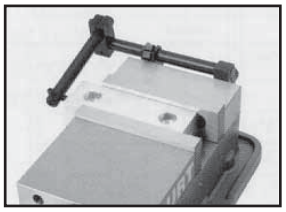

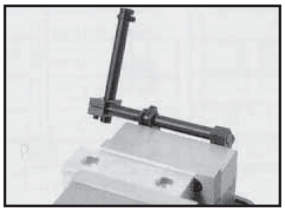

Vise Accessories

VISE KEYS

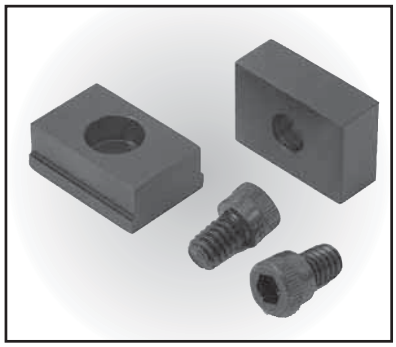

Hardened vise keys are used to align your Kurt vise to your milling machine table. Step keys are used when the keyway in the vise is different than that of the machine T-slot. Standard keys are used when they are the same width.

HARDENED STEP KEYS (PAIR)

Vise Model	Key Size	Part #
4" Vises	1/2 x 5/8	D30-33A
	1/2 x 7/16	D30-33B
	1/2 x 3/8	D30-33C
6" Vises	11/16 x 5/8	D50-33A
	11/16 x 13/16	D50-33B
	11/16 x 3/4	D50-33C
	11/16 x 9/16	D50-33D
	11/16 x 1/2	D50-33E
8" - 10" Vises	13/16 x 7/8	D80-33A
	13/16 x 11/16	D80-33B
	13/16 x 3/4	D80-33C
	13/16 x 5/8	D80-33D

HARDENED STANDARD KEYS (PAIR)

Vise Model	Key Size	Part #
4" Vises	1/2 x 1/2	D30-50
6" Vises	11/16 x 11/16	D50-50
8" - 10" Vises	13/16 x 13/16	D80-50

HARDENED METRIC KEYS (PAIR)

Vise Model	Key Size	Part #
4" Vises	1/2 X 14 MM	D30-33M14
4" Vises	1/2 X 18 MM	D30-33M18
6" Vises	11/16 X 18 MM	D50-33M18
8" - 10" Vises	13/16 X 18 MM	D80-33M18

POWERLOCK™ Drawbar

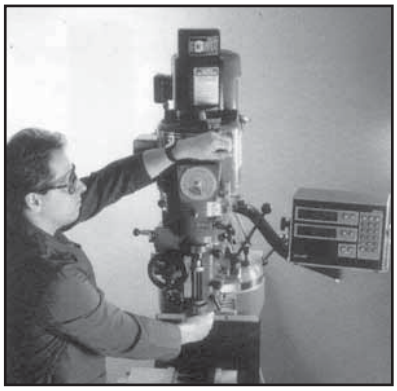

Automatic and Mechanical Drawbar

PowerLock Drawbar is available for these popular mills:

Atrump, Acer, Acramill, Alliant, Anilam, Bridgeport, Chevalier, Clausing/Kondia, Comet, DoAll, Enco, Euro Source, Exa, Ex-Cell-O, Fortune, Fryer, Hurco, Jet, Kent, Klim, Dondia, Lagun, Lilian, Mega, Mighty, Millport, Milltronic, MSC, Robo Tool, Royal rutland, Seiki, Sharp, Shizouka, Siber-Hegner, South Bend, Southwestern, Supermax, Topwell, Tri-Onics, Webb, Wells-Index, Willis

Automatic and Mechanical PowerLock Drawbars
Available for most manual & CNC mills with standard R-8 collets or 30 or 40 taper tool holders. Automate your present "Knee-Type" milling machines by installing a Kurt PowerLock Drawbar. PowerLock Drawbars reduce tool change time and allow more cutting time in the cycle. This eliminates waste. The whole process using the Kurt automatic or mechanical PowerLock Drawbar cuts the tool change time to one-fourth the time required to change tools manually with wrenches. An added benefit is consistent torque on the drawbar rod. When you multiply the time savings for every tool change on all of your mills, it can really add up.

Feature:
- Easy installation - operator can install with no special tools (instructions provided).
- Reduces operator fatigue - improves productivity and safety.
- Eliminates drawbar tapping to free tool in collet - reduces operator abuse.
- Convenient control - eliminates operator stretching to reach the drawbar.
- Assures uniform collet tightening - prevents under tightening and tool slip or over tightening and drawbar breakage.
- Operates on shop air supply - filter/lubricator, regulator and gauge included with most units. Provides clean oiled air to ensure long life.
- Safety interlock on automatic models prevents accidental engagement.
- Used with present tooling - operates R-8, #30 & #40 taper tool holders. Additional special tool holders not needed.
- Machine your own Drawbar Kits. Available for R-8 collets, #30 or #40 taper tool holders.
- 1 year limited warranty.*

Note: All machines that have Erickson Quick Change Spindle, and are converted to a Power Drawbar will have sharp threads and drive keys exposed near the spindle nose. We recommend the installation of a 194-00 SA Erickson Spindle Nose Guard.

195-050 Drive Key Safety Collar

- For 40 taper machines, eliminates pinching between tool holder and face of spindle.
- Use with V-flange tool holders (not LT-Flange)
- Requires slot thru tool holder flange.

INDEX

ANGLE HEADS

Performance Charts/General Information 2-8

Fixed Angle Heads & Right Angle Heads

TAF13P Fixed Angle Heads, BT/CT40/50, HSKA63/80/100, NMTB40/50 2-9
TAF20P Fixed Angle Heads, BT/CT50, HSKA80/100, NMTB50 2-10
TA04P Right Angle Heads, BT/CT40/50, HSKA63/80/100, NMTB40/50 2-11
TA06P Right Angle Heads, BT/CT40/50, HSKA63/80/100 & NMTB40/50 2-12
TA07P Right Angle Heads, BT/CT40/50, HSKA63/80/100 & NMTB40/50 2-13
TA07PL Right Angle Heads, BT/CT40/50, HSKA63/80/100 & NMTB50, ... 2-14
TA10P Right Angle Heads, BT/CT40/50, HSKA63/80/100 & NMTB40/50 2-15
TA10PL Right Angle Heads, BT/CT40/50, HSKA63/80/100 & NMTB40/50 2-16
TA13P Right Angle Heads, BT/CT40/50, HSKA63/80/100 & NMTB40/50 2-17
TA16P Right Angle Heads, BT/CT40/50, HSKA63/80/100 & NMTB40/50 2-18
TA20P Right Angle Heads BT/CT50, HSKA80/100 & NMTB50 2-19
TA20.30P, Right Angle Heads, BT/CT50, HSKA80/100 & NMTB50 2-20
TA26P Right Angle Heads, BT/CT50, HSKA80/100 & NMTB50 2-21
TA26.40P Right Angle Heads, BT/CT50, HSKA80/100 & NMTB50 2-22

Universal Angle Heads

TAV10P Universal Angle Heads, BT/CT40/50, HSKA63/80/100 & NMTB40/50 2-23
TAV13P Universal Angle Heads, BT/CT40/50, HSKA63/80/100 & NMTB40/50 2-24
TAV20P Universal Angle Heads, BT/CT40/50, HSKA100, NMTB50 2-25
TAV50.T Universal Angle Heads, ISO50 2-26

Right Angle Heads - With Coolant Thru the Output Spindle

TA07.PD Right Angle Heads, BT/CT40/50, HSKA63/80/100, NMTB40/50 2-27
TA10.PD Right Angle Heads, BT/CT40/50, HSKA63/80/100, NMTB40/50 2-28
TA13.PD Right Angle Heads, BT/CT40/50, HSKA63/80/100, NMTB40/50 2-29
TA16.PD Right Angle Heads, BT/CT40/50, HSKA63/80/100, NMTB40/50 2-30
TA20.PD Right Angle Heads, BT/CT50, HSKA80/100, NMTB50 2-31
TA26.PD Right Angle Heads, BT/CT50, HSKA80/100, NMTB50 2-32

Right Angle Heads With Offset

TA013 Right Angle Heads, BT/CT40/50, HSKA63/80/100, NMTB40/50 2-33
TA020 Right Angle Heads, BT/CT40/50, HSKA63/80/100, NMTB40/50 2-34

Right Angle Heads With Offset - With Coolant Thru the Output Spindle

TA013.D Right Angle Heads, BT/CT40/50, HSKA63/80/100, & NMTB40/50 2-35
TA020.D Right Angle Heads, BT/CT40/50, HSKA63/80/100, & NMTB40/50 2-36

Right Angle Heads-With Double Spindle Output

TA07.2P Right Angle Heads, BT/CT40/50, HSKA63/80/100, NMTB40/50 2-37
TA10.2P Right Angle Heads, BT/CT40/50, HSKA63/80/100, NMTB40/50 2-38
TA13.2P Right Angle Heads, BT/CT40/50, HSKA63/80/100, NMTB40/50 2-39
TA16.2P Right Angle Heads, BT/CT40/50, HSKA63/80/100, NMTB40/50 2-40
TA20.2P Right Angle Heads, BT/CT50, NMTB50, HSKA80/100 2-41
TA26.2P Right Angle Heads, BT/CT50, NMTB50, HSKA100 2-42

Angle Head Accessories

Torque Arm and Stop Block (Old Style) 2-43
Torque Arm and Stop Block (New Style) 2-44
Triblock Torque Arm . . . . . 2-45 & 2-46

Special Angle Heads

Special Angle Heads . . . . . 2-47 to 2-48
Fixed Centers Multi Heads 2-49

BAR PULLERS

Powerpull Bar Pullers – VDI & Plain Shank 4-20

BORING BAR ADAPTERS & BLANKS

BT & CT 1-60
HSK-A & HSK-E 1-61

BUSHINGS FOR TOOLHOLDERS

Type C & Z 4-68
Type CZ & J 4-69
Type LBF & LB 4-70
Type B and 5C 4-71
Boring Bar Sleeves 4-72
Taper Drill Sockets 4-73

CHUCKS

MANUAL CHUCKS

Techleader Super Thin Round & Square Manual Chucks 5-99

Self-Centering Chucks

3 & 4 Jaw Precision Self-Centering Chucks With Solid Jaws . . . . . 5-100 & 5-101
3 & 4 Jaw Precision Self-Centering Chucks With Hard Reversible Top Jaws . . . . . 5-102 & 5-103
3 & 4 Jaw Large Diameter Self-Centering Chuck – STEEL . . . . . 5-104 & 5-105
3 & 4 Jaw Oil Country Self-Centering Chucks 5-106
Spare Parts . . . . . 5-116 thru 5-119

4-Jaw Independent Chucks

4-Jaw Independent Chucks with Solid Hard Reversible Top Jaws . . . . . 5-107 & 5-108
4-Jaw Independent Chucks with Hard Reversible Top Jaws . . . . . 5-109 & 5-110
4-Jaw Heavy Duty Independent Chucks . . . . . 5-111 & 5-112
4-Jaw Oil Country Independent Chucks With Hard Reversible Top Jaws 5-113
Spare Parts . . . . . 5-120 & 5-121

KITAGAWA POWER CHUCKS & CYLINDERS

B & BT Series Chucks . . . . . 5-72 & 5-73
B200 & BT200 Series Chucks . . . . . 5-74 & 5-75
BL200 Series Chucks . . . . . 5-76 & 5-77
HOH Series Chucks . . . . . 5-78 & 5-79
N Series Chucks . . . . . 5-80 & 5-81
NL/NLT Series Chucks . . . . . 5-82 & 5-83
QB300 Series Chucks . . . . . 5-84 & 5-85
FH & FHP Series Cylinders . . . . . 5-86 & 5-87
S & SL Series Cylinders . . . . . 5-88 & 5-89
YR & YRE Series Cylinders . . . . . 5-90 & 5-91
Chuck Adapter Plates 5-92
Chuck & Cylinder Parts List 5-93

SAMCHULLY POWER CHUCKS & CYLINDERS

HAS Series 3-Jaw 5-54
HAS Series 3-Jaw For HAAS CNC Lathes 5-55
HAH Series 3-Jaw 5-56
HAH Series 3-Jaw For HAAS CNC Lathes 5-57
HST Series 2-Jaw 5-58
HH Series 3-Jaw Big Bore 5-59
HHF/HSF Series 4-Jaw Open Cylinder 5-60
HCHF Series 4-Jaw Open Cylinder 5-61
HC Series 3-Jaw Closed Cylinder . . . . . 5-62 & 5-63
HCF Series 4-Jaw Closed Cylinder . . . . . 5-64 & 5-65
Hydraulic Chuck Components 5-66
SH/SHL Series Open Center Cylinder 5-67
SYH Series Open Center Cylinder 5-68
HYH Series Open Center Cylinder 5-69
Y-R Series Closed Center Cylinder 5-70
AY-R Series Closed Center Cylinder 5-71

KITAGAWA POWER COLLET CHUCKS

CR Series Power Collet Chucks 5-95
QCR Series Quick Change Power Collet Chucks 5-96
QCR Series Quick Change Power Collet Chucks 5-97
Spindle Data Information 5-98

Spindle Mountings 5-122

Adapter Plates 5-123

COLLET CHUCKS TOOLHOLDERS

DA Series

BT & CT 1-8
NMTB and Extensions 1-9

ECX (ER) Series

BT – Balanced 1-15
CT – Balanced. 1-16
CT – COOLANT THRU THE FLANGE (Din 69871 Form B). 1-17
HSK-A.. 1-19
HSK-E. & DC Slim Extensions and Collets 1-20
NMTB and Extensions 1-18

HP Plus Series

HP Plus Introduction. 1-10
BT, CT & HSK HP Plus Collet Chucks & Collets 1-11

Centro P Series

Centro P Collet Chucks Introduction 1-12
Centro P Collet Chucks Features & Benefits. 1-13
BT, CT & HSK Centro P Collet Chucks & Collets 1-14

TG Series

BT & CT 1-4
BT & CT - BALANCED 1-5
CT - COOLANT THRU THE FLANGE (Din 69871 Form B) 1-6
NMTB & R8. 1-7
SPARE PARTS (DA, ECX & TG Collet Chucks) 1-21
Wrenches, Back Up Screws (ECX Collet Chucks) 1-22

COLLETS

3J

Round, Hexagon, Square, & Emergency 3-48

5C

Round, Hexagon, Square, Emergency, & Step. 3-47

16C

Round Smooth 16C Collets – Inch 3-49
Round Metric, Round Serrated, Hexagon, Square, & Emergency 3-50

Din 6343

NO. 42/48 Round Smooth, Hexagon, Square, & Emergency. 3-55
NO. 60/66 Round Smooth, Hexagon, Square, & Emergency. 3-56

DA – Double Angle Collets

INTRODUCTION and Double Angle Collet Extensions. 3-4
300DA & 200DA 3-5
100DA & 180DA 3-6

ECX (ER) – Standard and Ultra Precision

INTRODUCTION. 3-7
ECX8/ER8, ECX9/ER9, & ECX11/ER11 3-8
ECX12/ER12 & ECX16/ER16 3-9
ECX20/ER20 & ECX25/ER25 3-10
ECX/ER32 & ECX/ER40 3-11
ECX50/ER50 3-12
ECX16/ER16 & ECX20/ER20 Coolant Sealed 3-13

ECX25/ER25 & ECX32/ER32 Coolant Sealed . . . 3-14
ECX40/ER40 Coolant Sealed . . . 3-15
ECX/ER Collet Nuts . . . 3-16 & 17
ECX/ER Collet Nuts & Wrenches . . . 3-18

ECX/ER Tapping - Rigid

ECX16, ECX20, ECX25, ECX32, & ECX40. . . . 3-34

ETS High Precision Self-Centering

INTRODUCTION – Accuracy Charts & Information . . . 3-21 & 3-22
ETS14 & ETS16 . . . 3-23
ETS20 & ETS25 . . . 3-24
ETS32 & ETS40 . . . 3-25
ETS Collet Nuts . . . 3-26

Flexible Rubber

Models 41, 42, & 44 Collets, Drill Holders, Nuts, & Spanners . . . 3-33

Full Grip

415E . . . 3-30
462E . . . 3-31
467E . . . 3-32

R8 & NMTB40 Coupling . . . 3-46

TG – Single Angle

TG75 Collets . . . 3-1
TG100 & TG150 Collets . . . 3-2
TG75 & TG100 Coolant Sealed Collets . . . 3-3

TG Tapping - Rigid

TG75 & TG100 . . . 3-36

Wide Range Multibore

W850 & V120 Round, Hexagon, Square & Emergency . . . 3-51
T285 Round, Hexagon, Square & Emergency . . . 3-52
M671 & M673 Round, Hexagon, & Square Wide Range DIN 6343 . . . 3-53
M677 Round, Hexagon, & Square Wide Range DIN 6343 . . . 3-54

YCX (YCC)

YCX13 & YCX16 . . . 3-27
YCX20 & YCX25 . . . 3-28
YCX32 . . . 3-29

COLLETS - TAPPING

ET-1 Series

INTRODUCTION – Dimensional Chart & Information . . . 3-40
ET-1-12 thru ET-1-40 (for Taps DIN 371/376 & U.S. Standard) . . . 3-41

RT-1 Series

INTRODUCTION – Dimensional Chart & Information . . . 3-42 & 3-43
RT-1-61 thru RT-1-65 (for Taps DIN371/376 & U.S. Standard). . . . 3-44

Bilz Type Tap Chucks

Quick Change Tap Adapters (CE-1 thru CE-4) . . . 3-37
Torque Control Tap Adapters (CES-1B thru CES-4B) . . . 3-38

ECX/ER & TG Rigid Tapping

ECX16, ECX20, ECX25, ECX32, & ECX40. . . . 3-34 & 3-35
TG75 & TG100 . . . 3-36

Kato Type Tap Chucks

Type TC412 & TC1022 . . . 3-45

COOLANT SEALED COLLET NUTS & DISCS (TG & ECX/ER STYLE)

Coolant Sealed Nuts 3-19
Coolant Sealed Discs 3-20

COLLET CHUCKS POWER -KITAGAWA

CR Series Power Collet Chucks 5-95
QCR Series Quick Change Power Collet Chucks 5-96
QCR Series Quick Change Power Collet Chucks 5-97
Spindle Data Information 5-98

DRILL CHUCKS

Jacobs Drill Chucks - Keyed

Ball Bearing – Tapered Mount & Spare Parts 1-44
Plain Bearing – Medium & Heavy Duty-Tapered Mount 1-45
Plain Bearing – Medium & Heavy Duty-Thread Mounted 1-46
Drill Chuck Arbors & Spare Parts 1-47

High Performance Drill Chucks - Keyless

PLANET Series-High Performance Drill Chucks - Introduction 1-48
BT & CT Integral NPU-PLANET High Performance Keyless Drill Chucks 1-49
NPU Series-Precision Drill Chucks - Introduction 1-50
BT & CT Integral NPU Precision Keyless Drill Chucks 1-51
SP Precision Keyless Drill Chucks 1-52
SPX Precision Keyless Drill Chucks-High Torque 1-53
SPS-SOLID Keyless Drill Chucks 1-54
SPARE PARTS for SP, SPX, SPS, NPU & Planet Drill Chucks 1-55

EDGE SENSORS

Electronic Edge Finder and Tool Length Setter 1-63

END MILL HOLDERS

BT – End Mill Holders 1-23
BT – End Mill Holders – BALANCED 1-24
BT – End Mill Holders – METRIC 1-25
CT – End Mill Holders 1-26
CT – End Mill Holders (Continued) 1-27
CT – End Mill Holders – BALANCED 1-28
CT – End Mill Holders – METRIC 1-29
NMTB & R8 – End Mill Holders 1-30
HSK-A End Mill Holders 1-31
SPARE PARTS (Set screws for end mill holders) 1-32

FIXED ANGLE HEADS

Fixed Angle Heads & Right Angle Heads

TAF13P Fixed Angle Heads, BT/CT40/50, HSKA63/80/100, NMTB40/50 2-9
TAF20P Fixed Angle Heads, BT/CT50, HSKA80/100, NMTB50 2-10

HARD JAWS

Hard Serrated Top Jaws – Reversible Type

1/16” X 90 and 3/32” X 90 Degree Serrations . . . . . 5-27 & 5-28
1.5mm X 60 Degree Serrations 5-29

Hard Top Jaws - Adjustable

1.5mm X 60 Degree Serrations – EXTERNAL CLAMPING . . . . . 5-17 & 5-18
1.5mm X 60 Degree Serrations – INTERNAL CLAMPING . . . . . 5-19 & 5-20
1/16” X 90 and 3/32” X 90 Degree Serrations – EXTERNAL CLAMPING . . . . . 5-21 & 5-22

1/16” X 90 and 3/32” X 90 Degree Serrations – INTERNAL CLAMPING . . . . . 5-23 & 5-24
1.5mm X 60 Degree Serrations – BAR CLAMPING 5-25
1/16” X 90 and 3/32” X 90 Degree Serrations - BAR CLAMPING 5-26

Hard Top Jaws – Adjustable (Slot/tenon)

DATA SHEET – ADJUSTABLE HARD TOP JAWS 5-30
ADJUSTAGRIP HARD TOP JAWS for Slot/Tenon QC Chucks-Ext. Clamping . . . . . 5-37 thru 5-41

INDEPENDENT CHUCKS – 4 JAW

4-Jaw Oil Country Independent Chucks 5-107
4-Jaw ONE PIECE Independent Chucks . . . . . 5-108 & 5-109
4-Jaw TWO PIECE Independent Chucks . . . . . 5-110 & 5-111
Heavy Duty 4-Jaw Independent Chucks . . . . . 5-112 & 5-113
Spare Parts . . . . . 5-116 thru 5-121

JACOBS DRILL CHUCKS - KEYED

Ball Bearing – Tapered Mount & Spare Parts 1-44
Plain Bearing – Medium & Heavy Duty-Tapered Mount 1-45
Plain Bearing – Medium & Heavy Duty-Thread Mounted 1-46
Drill Chuck Arbors & Spare Parts 1-47

JACOBS TAPER HOLDERS

BT & CT 1-42
NMTB & R8 1-43

JAWS

Technical Information and Application Flowchart . . . . . 5-1 thru 5-3

BLANK SERRATED TOP JAWS

1.5mm X 60 Degree… 1/16” X 90 Degree…3/32” X 90 Degree - ALUMINUM 5-5
1.5mm X 60 Degree… 1/16” X 90 Degree…3/32” X 90 Degree -STEEL 5-4

BOX JAWS

Box Jaws from 1000mm to 2500mm 5-114
ILLUSTRATION 5-115

HARD JAWS

Hard Serrated Top Jaws – Reversible Type

1/16” X 90 and 3/32” X 90 Degree Serrations . . . . . 5-27 & 5-28
1.5mm X 60 Degree Serrations 5-29

Hard Top Jaws - Adjustable

1.5mm X 60 Degree Serrations – EXTERNAL CLAMPING . . . . . 5-17 & 5-18
1.5mm X 60 Degree Serrations – INTERNAL CLAMPING . . . . . 5-19 & 5-20
1/16” X 90 and 3/32” X 90 Degree Serrations – EXTERNAL CLAMPING . . . . . 5-21 & 5-22
1/16” X 90 and 3/32” X 90 Degree Serrations – INTERNAL CLAMPING . . . . . 5-23 & 5-24
1.5mm X 60 Degree Serrations – BAR CLAMPING 5-25
1/16” X 90 and 3/32” X 90 Degree Serrations - BAR CLAMPING 5-26

Hard Top Jaws – Adjustable (Slot/tenon)

DATA SHEET – ADJUSTABLE HARD TOP JAWS 5-30
ADJUSTAGRIP HARD TOP JAWS for Slot/Tenon QC Chucks-Ext. Clamping . . . . . 5-37 thru 5-41

Monoblock Jaws for Quick Change Chucks

HARD REVERSIBLE MONOBLOCK JAWS to Suit Quick Change Chucks 5-46
SOFT MONOBLOCK JAWS to Suit Quick Change Chucks 5-47

SCROLL JAWS – Soft And Hard

SCROLL JAWS for Manual Scroll Chucks . . . . . 5-45 & 5-46

SERRATION CLEANING PLATES & ACCESSORIES

Serration Cleaning Plates, Workpiece Height Pins & Quick Jaw Change Base Jaw Bolts 5-52

SLOT/TENON JAWS

Slot/Tenon Top Jaws

CHUCK DATA SHEET. 5-36
SLOT/TENON DIAMOND & ALUMINUM TOP JAWS to Suit QC Chucks . . . . . 5-33 & 5-34
SLOT/TENON SOFT TOP JAWS to Suit Quick Jaw Change Chucks. . . . . 5-31 thru 5-32

Slot/Tenon Hard Base Jaws

SLOT/TENON HARD BASE Jaws to Suit Quick Change Chucks 5-44

Slot/Tenon - Hard Top Jaws

HARD TOP JAWS for Slot/Tenon Quick Change Chucks – Reversible Type . . . . . 5-42 & 5-43

Tri Square Top Jaws

1.5mm X 60 Degree Serrations for Kitagawa and Howa Chucks 5-51

SOFT JAWS

Soft Serrated Top Jaws

1.5mm X 60 Degree Serrations. . . . . 5-4 thru 5-7 & 5-10
1/16” X 90 and 3/32” X 90 Degree Serrations . . . . . 5-9 thru 5-13
Serrated Top Jaw And Chuck Data Sheet 5-8

Soft Serrated Top Jaws - Diamond

1/16” X 90 Degree Serrations - STEEL or ALUMINUM . . . . . 5-14 & 5-15
1.5mm X 60 Degree Serrations - STEEL or ALUMINUM. 5-16

JAW NUTS (T-Nuts)

. . . . . 5-48 thru 5-50

KITAGAWA POWER CHUCKS

B & BT Series Chucks . . . . . 5-72 & 5-73
B200 & BT200 Series Chucks . . . . . 5-74 & 5-75
BL200 Series Chucks . . . . . 5-76 & 5-77
HOH Series Chucks . . . . . 5-78 & 5-79
N Series Chucks. . . . . 5-80 & 5-81
NL/NLT Series Chucks . . . . . 5-82 & 5-83
QB300 Series Chucks . . . . . 5-84 & 5-85
FH & FHP Series Cylinders . . . . . 5-86 & 5-87
S & SL Series Cylinders . . . . . 5-88 & 5-89
YR & YRE Series Cylinders . . . . . 5-90 & 5-91
Chuck Adapter Plates. 5-92
Chuck & Cylinder Parts List 5-93

KITAGAWA POWER COLLET CHUCKS

CRL Series 3-95
CR Series Power Collet Chucks. 5-96
QCR Series Quick Change Power Collet Chucks . . . . . 5-96 & 97
Spindle Data Information 5-98

LIVE CENTERS

Model RN and RC Revolving Lathe Centres 4-74

LOCKING FIXTURES FOR TOOLHOLDERS

BT/CT 30, 40 & 50 Tool Holder Locking Fixtures 1-65
BT/CT & HSK Quick Change Toolholder Locking Fixtures 1-66

LUBRICANT

CHUCK-EEZ® Power Chuck Lubricant 5-94

MACHINABLE WAX

1-1/2”-8” Thick Blocks and Cylinders . . . . . 1-77 &1-78

MANUAL CHUCKS

CONCENTRIC CHUCKS

3 & 4 Jaw Precision Self-Centering Chucks With Solid Jaws – IRON or STEEL . . . . . 5-100 & 5-101
3 & 4 Jaw Precision Self-Centering Chuck With Hard Revs Top Jaws – IRON or STEEL . . . . . 5-102 & 5-103
3 & 4 Jaw Large Diameter Concentric Chuck – IRON or STEEL . . . . . 5-104 & 5-105
Oil Country Concentric Chucks . . . . . 5-106 & 5-107

INDEPENDENT CHUCKS – 4 JAW

4-Jaw Oil Country Independent Chucks 5-107
4-Jaw ONE PIECE Independent Chucks . . . . . 5-108 & 5-109
4-Jaw TWO PIECE Independent Chucks . . . . . 5-110 & 5-111
Heavy Duty 4-Jaw Independent Chucks . . . . . 5-112 & 5-113
Spare Parts . . . . . 5-116 thru 5-121

MILLING CHUCKS

INTRODUCTION 1-1
BT & CT ACE LOCK 1-2
Straight Collets 1-3
Wrenches 1-15

MORSE TAPER HOLDERS

BT and Reduction Sleeves 1-38
CT and Reduction Sleeve. 1-39
NMTB & R8. 1-40
HSK-A Morse 1-41

MULTI-SPINDLE HEADS

Fixed Centre Multi Heads 2-49

PRESETTING UNITS

Tool Mounting Device and Interchangeable Tool Pots 1-61
1-D (1-Axis) Presetter 1-62
2-D (2-Axis) Presetter 1-63
VISODATA/VISOTRIM II Presetting Unit 1-64

POWER CHUCKS

KITAGAWA POWER CHUCKS

B & BT Series Chucks . . . . . 5-72 & 5-73
B200 & BT200 Series Chucks . . . . . 5-74 & 5-75
BL200 Series Chucks . . . . . 5-76 & 5-77
HOH Series Chucks . . . . . 5-78 & 5-79
N Series Chucks. . . . . 5-80 & 5-81
NL/NLT Series Chucks . . . . . 5-82 & 5-83
QB300 Series Chucks . . . . . 5-84 & 5-85
FH & FHP Series Cylinders . . . . . 5-86 & 5-87

S & SL Series Cylinders . . . . . 5-88 & 5-89
YR & YRE Series Cylinders . . . . . 5-90 & 5-91
Chuck Adapter Plates 5-92
Chuck & Cylinder Parts List 5-93

SAMCHULLY POWER CHUCKS & CYLINDERS

HAS Series 3-Jaw 5-54
HAS Series 3-Jaw For HAAS CNC Lathes 5-55
HAH Series 3-Jaw 5-56
HAH Series 3-Jaw For HAAS CNC Lathes 5-57
HST Series 2-Jaw 5-58
HH Series 3-Jaw Big Bore 5-59
HHF/HSF Series 4-Jaw Open Cylinder 5-60
HCHF Series 4-Jaw Open Cylinder 5-61
HC Series 3-Jaw Closed Cylinder . . . . . 5-62 & 5-63
HCF Series 4-Jaw Closed Cylinder . . . . . 5-64 & 5-65
Hydraulic Chuck Components 5-66
SH/SHL Series Open Center Cylinder 5-67
SYH Series Open Center Cylinder 5-68
HYH Series Open Center Cylinder 5-69
Y-R Series Closed Center Cylinder 5-70
AY-R Series Closed Center Cylinder 5-71

POWER CHUCK LUBRICANT

CHUCK-EEZ® Power Chuck Lubricant 5-94

POWERPULL BAR PULLER

VDI and Plain Shank Powerpull Bar Pullers 4-20
PowerLock Drawbar 5-165

RETENTION STUDS

Retention Studs 1-62

REVOLVING LATHE CENTRES

Model RN and RC Revolving Lathe Centres 4-74

RIGHT ANGLE HEADS

PERFORMANCE CHARTS/GENERAL INFORMATION 2-8

Fixed Angle Heads & Right Angle Heads

TAF13P Fixed Angle Heads, BT/CT40/50, HSKA63/80/100, NMTB40/50 2-9
TAF20P Fixed Angle Heads, BT/CT50, HSKA80/100, NMTB50 2-10
TA04P Right Angle Heads, BT/CT40/50, HSKA63/80/100, NMTB40/50 2-11
TA06P Right Angle Heads, BT/CT40/50, HSKA63/80/100 & NMTB40/50 2-12
TA07P Right Angle Heads, BT/CT40/50, HSKA63/80/100 & NMTB40/50 2-13
TA07PL Right Angle Heads, BT/CT40/50, HSKA63/80/100 & NMTB50, ... 2-14
TA10P Right Angle Heads, BT/CT40/50, HSKA63/80/100 & NMTB40/50 2-15
TA10PL Right Angle Heads, BT/CT40/50, HSKA63/80/100 & NMTB40/50 2-16
TA13P Right Angle Heads, BT/CT40/50, HSKA63/80/100 & NMTB40/50 2-17
TA16P Right Angle Heads, BT/CT40/50, HSKA63/80/100 & NMTB40/50 2-18
TA20P Right Angle Heads BT/CT50, HSKA80/100 & NMTB50 2-19
TA20.30P, Right Angle Heads, BT/CT50, HSKA80/100 & NMTB50 2-20
TA26P Right Angle Heads, BT/CT50, HSKA80/100 & NMTB50 2-21
TA26.40P Right Angle Heads, BT/CT50, HSKA80/100 & NMTB50 2-22

Right Angle Heads - With Coolant Thru the Output Spindle

TA07.PD Right Angle Heads, BT/CT40/50, HSKA63/80/100, NMTB40/50 2-27
TA10.PD Right Angle Heads, BT/CT40/50, HSKA63/80/100, NMTB40/50 2-28
TA13.PD Right Angle Heads, BT/CT40/50, HSKA63/80/100, NMTB40/50 2-29
TA16.PD Right Angle Heads, BT/CT40/50, HSKA63/80/100, NMTB40/50 2-30

TA20.PD Right Angle Heads, BT/CT50, HSKA80/100, NMTB50 2-31
TA26.PD Right Angle Heads, BT/CT50, HSKA80/100, NMTB50 2-32

Right Angle Heads With Offset

TA013 Right Angle Heads, BT/CT40/50, HSKA63/80/100, NMTB40/50 2-33
TA020 Right Angle Heads, BT/CT40/50, HSKA63/80/100, NMTB40/50 2-34

Right Angle Heads With Offset - With Coolant Thru the Output Spindle

TA013.D Right Angle Heads, BT/CT40/50, HSKA63/80/100, & NMTB40/50 2-35
TA020.D Right Angle Heads, BT/CT40/50, HSKA63/80/100, & NMTB40/50 2-36

Right Angle Heads-With Double Spindle Output

TA07.2P Right Angle Heads, BT/CT40/50, HSKA63/80/100, NMTB40/50 2-37
TA10.2P Right Angle Heads, BT/CT40/50, HSKA63/80/100, NMTB40/50 2-38
TA13.2P Right Angle Heads, BT/CT40/50, HSKA63/80/100, NMTB40/50 2-39
TA16.2P Right Angle Heads, BT/CT40/50, HSKA63/80/100, NMTB40/50 2-40
TA20.2P Right Angle Heads, BT/CT50, NMTB50, HSKA80/100 2-41
TA26.2P Right Angle Heads, BT/CT50, NMTB50, HSKA100 2-42

Angle Head Accessories

Torque Arm and Stop Block (Old Style) 2-43
Torque Arm and Stop Block (New Style) 2-44
Triblock Torque Arm . . . . . 2-45 & 2-46

SPECIAL ANGLE HEADS

Special Angle Heads . . . . . 2-47 to 2-48
Fixed Centers Multi Heads 2-49

SAMCHULLY

SAMCHULLY POWER CHUCKS & CYLINDERS

HAS Series 3-Jaw 5-54
HAS Series 3-Jaw For HAAS CNC Lathes 5-55
HAH Series 3-Jaw 5-56
HAH Series 3-Jaw For HAAS CNC Lathes 5-57
HST Series 2-Jaw 5-58
HH Series 3-Jaw Big Bore 5-59
HHF/HSF Series 4-Jaw Open Cylinder 5-60
HCHF Series 4-Jaw Open Cylinder 5-61
HC Series 3-Jaw Closed Cylinder . . . . . 5-62 & 5-63
HCF Series 4-Jaw Closed Cylinder . . . . . 5-64 & 5-65
Hydraulic Chuck Components 5-66
SH/SHL Series Open Center Cylinder 5-67
SYH Series Open Center Cylinder 5-68
HYH Series Open Center Cylinder 5-69
Y-R Series Closed Center Cylinder . . . . . .

SCROLL JAWS – SOFT AND HARD

SCROLL JAWS for Manual Scroll Chucks 5-45

SHELL MILL HOLDERS

BT – Shell Mill Holders 1-33
CT – Shell Mill Holders 1-34
NMTB & R8 Shell Mill Holders 1-35
HSK-A Shell Mill & Face Mill Holders 1-36

SLOT/TENON JAWS

Slot/Tenon Top Jaws

CHUCK DATA SHEET 5-36
SLOT/TENON DIAMOND & ALUMINUM TOP JAWS to Suit QC Chucks . . . . . 5-33 & 5-34

SLOT/TENON SOFT TOP JAWS to Suit Quick Jaw Change Chucks . . . . . 5-31 & 5-32

Slot/Tenon Hard Base Jaws

SLOT/TENON HARD BASE CHUCKS to Suit Quick Change Chucks 5-44

Slot/Tenon - Hard Top Jaws

HARD TOP JAWS for Slot/Tenon Quick Change Chucks – Reversible Type . . . . . 5-42 & 43

SOFT JAWS

Soft Serrated Top Jaws

1.5mm X 60 Degree Serrations . . . . . 5-4 thru 5-7
1/16” X 90 and 3/32” X 90 Degree Serrations . . . . . 5-8 thru 5-12
SERRATED TOP JAW AND CHUCK DATA SHEET 5-16

Soft Serrated Top Jaws - Diamond

1/16” X 90 Degree Serrations - STEEL or ALUMINUM . . . . . 5-13 & 5-14
1.5mm X 60 Degree Serrations - STEEL or ALUMINUM 5-15

SPECIAL ANGLE HEADS

Special Angle Heads . . . . . 2-47 to 2-48
Fixed Centres Multi Heads 2-49

SPINDLE CLEANERS

CT, BT, NMTB and HSK 1-64

SPINDLE SPEEDERS

General Information 2-1
Performance Charts 2-2
BT & CT– Spindle Speeders (MO10.6, M013.6, MO16.6, MO25.4) 2-3
NMTB – Spindle Speeders (MO1O.6, MO13.6, MO16.6, MO25.4) 2-4
Torque Arms for BT & CT Shanks 2-5
Torque Arm for NMTB and Stop Block 2-6
Spindle Speeders with Special Execution Coolant Flow 2-7

STORAGE SYSTEMS & TOOL HOLDER CARTS

BIG BEAR Tool Holder/Collet Karts and Storage Units 1-71
BIG BEAR Tool Holder/Collet Karts and Storage Units 1-72
SUSTA Cabinets & Trollies - Introduction 1-73
SUSTA Drawer Accessories 1-76
SUSTA Machine Tool Cabinets 1-82
SUSTA Ministore Cabinets, Trollies & Accessories . . . . . 1-74 thru 1-79
SUSTA Work Bench Assemblies 1-80

TAP CHUCKS - BILZ TYPE

Quick Change Tap Adapters (CE-1 thru CE-4) 3-37
Torque Control Tap Adapters (CES-1B thru CES-4B) 3-38

TAP CHUCKS – KATO TYPE

Type TC412 & TC1022 3-45

TAP HOLDERS

BT & CT Rigid and Tension & Compression Modular Tap Holders 1-56
HSK-A Rigid Tap Holders 1-57
HSK-A Floating Tap Holders 1-58
Morse Taper Tap Holders 1-59

TOMBSTONES

AJB-HB & MP 2 & 4 Face Tombstones 5-135

TOOL BLOCK-PRESETTING UNITS

Tool Mounting Device and Interchangeable Tool Pots 1-67
1-D (1-Axis) Presetter 1-68

2-D (2-Axis) Presetter . . . 1-69
VISODATA/VISOTRIM II Presetting Unit . . . 1-70

TOOL LOCKS

BT/CT 30, 40 & 50 Tool Holder Locking Fixtures . . . 1-65
BT/CT & HSK Quick Change Toolholder Locking Fixtures . . . 1-66

TOOLHOLDERS - BT, CT, HSK, NMTB-QC, R8

MILLING CHUCKS

Introduction . . . 1-1
BT & CT ACE LOCK Milling Chucks . . . 1-2
ACE LOCK Milling Chuck Collets . . . 1-3

COLLET CHUCKS

TG Series

BT & CT Collet Chucks . . . 1-4
BT & CT Collet Chucks-BALANCED . . . 1-5
CT - Collet Chucks - Coolant Thru The Flange (Din 69871 Form B) . . . 1-6
R8 & NMTB Collet Chucks . . . 1-7

DA Series

BT & CT Collet Chucks . . . 1-8
NMTB Collet Chucks and Extensions . . . 1-9

HP Plus Series

HP Plus Introduction . . . 1-10
BT, CT & HSK HP Plus Collet Chucks & Collets . . . 1-11

Centro P Series

Centro P Collet Chucks Introduction . . . 1-12
Centro P Collet Chucks Features & Benefits . . . 1-13
BT, CT & HSK Centro P Collet Chucks & Collets . . . 1-14

ECX (ER) Series

BT – Collet Chucks (Balanced) . . . 1-15
CT – Collet Chucks (Balanced) . . . 1-16
CT – Collet Chucks - Coolant Thru The Flange (Din 69871 Form B) . . . 1-17
NMTB – Collet Chucks and Extensions . . . 1-18
HSK-A Collet Chucks . . . 1-19
HSK-E Collet Chucks & DC Slim Extensions & Collets . . . 1-20

SPARE PARTS – for TG, DA & ECX Collet Chucks

Nuts, Snap Rings, Thrust Rings, and Steel Balls . . . 1-21
Wrenches, Back Up Screws (ECX Collet Chucks) . . . 1-22

END MILL HOLDERS

BT – End Mill Holders . . . 1-23
BT – End Mill Holders – BALANCED . . . 1-24
BT – End Mill Holders – METRIC . . . 1-25
CT – End Mill Holders . . . 1-26
CT – End Mill Holders (Continued) . . . 1-27
CT – End Mill Holders – BALANCED . . . 1-28
CT – End Mill Holders – METRIC . . . 1-29
NMTB & R8 – End Mill Holders . . . 1-30
HSK-A End Mill Holders . . . 1-31
SPARE PARTS (Set screws for end mill holders) . . . 1-32

SHELL MILL HOLDERS

BT – Shell Mill Holders . . . 1-33
CT – Shell Mill Holders . . . 1-34
NMTB & R8 Shell Mill Holders . . . 1-35
HSK-A Shell Mill & Face Mill Holders . . . 1-36
SPARE PARTS (Drive key screws, drive keys, and arbor screws for shell mill holders) . . . 1-37

MORSE TAPER HOLDERS

BT – Morse Taper Holders and Reduction Sleeves . . . 1-38
CT – Morse Taper Holders and Reduction Sleeves . . . 1-39
NMTB & R8 Morse Taper Holders . . . 1-40
HSK-A Morse Taper Holders . . . 1-41

JACOBS TAPER HOLDERS

BT & CT Jacobs Taper Holders . . . 1-42
NMTB & R8 Jacobs Taper Holders . . . 1-43

TAP HOLDERS

BT & CT Rigid and Tension & Compression Modular Tap Holders . . . 1-56
HSK-A Rigid Tap Holders . . . 1-57
HSK-A Floating Tap Holders . . . 1-58
Morse Taper Tap Holders . . . 1-59

TOOLHOLDERS - STATIC FOR MAZAK LATHES

MAZAK SQT Static Toolholders (Forward, Reverse, Boring, Facing & U-Drill Holders) . . . 4-64
MAZAK SQT Static Toolholders (Cut-Off, Double Turn, Double Boring Holders, Turret Caps & Clamp Sets) . . . 4-65
MAZAK SQT Static Toolholder – BUSHINGS AND SPARE PARTS . . . 4-66
MAZAK Toolholders (Quick turn) . . . 4-67

TRUEBORERS

Jaw Boring-Turning Fixture for Power Chucks . . . 5-61

UNIVERSAL ANGLE HEADS

TAV10P Universal Angle Heads, BT/CT40/50, HSKA63/80/100 & NMTB40/50 . . . 2-23
TAV13P Universal Angle Heads, BT/CT40/50, HSKA63/80/100 & NMTB40/50 . . . 2-24
TAV20P Universal Angle Heads, BT/CT40/50, HSKA100, NMTB50 . . . 2-25
TAV50.T Universal Angle Heads, ISO50 . . . 2-26

VDI DRIVEN TOOLS

Couplings for VDI Driven Tools . . . 4-21
Axial VDI Driven Tools . . . 4-22
Axial VDI Offset Driven Tools . . . 4-23
Radial VDI Driven Tools . . . 4-24
Radial VDI Offset Driven Tools . . . 4-25
Universal VDI Driven Tools . . . 4-26
Slitting Saw VDI Driven Tools . . . 4-27
Axial Adjustable Y-Axis VDI Driven Tools . . . 4-28
Radial Adjustable Y-Axis VDI Driven Tools . . . 4-29
Coupling for VDI Driven Tools . . . 4-30
Axial VDI Driven Tools - Flush Nut . . . 4-31
Radial VDI Driven Tools - Flush Nut . . . 4-32
Double Radial VDI Driven Tools - Flush Nut . . . 4-33
Radial Short VDI Driven Tools - Flush Nut . . . 4-34
Universal VDI Driven Tools - Flush Nut . . . 4-35

DRIVEN TOOLS FOR DAEWOO LATHES

Axial & Radial Driven Tools . . . 4-36
Double Radial & Universal Driven Tools . . . 4-37

DRIVEN TOOLS FOR HAAS LATHES

Axial & Radial Driven Tools . . . 4-38
Universal Driven Tools . . . 4-39

DRIVEN TOOLS FOR MAZAK LATHES

V-Type Axial Driven Tools SQT . . . 4-40
H-Type Radial Driven Tools SQT . . . 4-41
H-Type Radial Driven Tools Sub-Spindle SQT . . . 4-42
H-Type Radial Driven Tools Double Spindle SQT . . . 4-43

Universal Driven Tools SQT 4-44
V-Type Axial / H-Type Radial Driven Tools Multiplex 6200 4-45
Universal Driven Tools Multiplex 6200 4-46

DRIVEN TOOLS FOR MORI SEIKI LATHES

Axial & Radial Driven Tools SL Series 4-47
Radial Driven Tools SL Series 4-48
Radial Double Spindle Driven Tools SL Series 4-49
Universal Driven Tools SL Series 4-50
Axial Driven Tools NL Series 4-51
Radial & Radial Double Spindle Driven Tools NL Series 4-52
Universal Driven Tools NL Series 4-53

DRIVEN TOOLS FOR NAKAMURA LATHES

Axial & Radial Driven Tools SC & WT Series 4-54
Radial Double Spindle & Adjustable Driven Tools SC & WT Series 4-55

DRIVEN TOOLS FOR OKUMA LATHES

Couplings for OKUMA Driven Tools 4-56
Axial Driven Tools LB, LR, LU, LVT Series 4-57
Radial Driven Tools LB, LR, LU, LVT Series 4-58
Radial Short Driven Tools LB, LR, LU, LVT Series 4-59
Universal Driven Tools LB, LR, LU, LVT Series 4-60
Slitting Driven Tools LB, LR, LU, LVT Series 4-61
Axial Adjustable Y-Axis Driven Tools LB, LR, LU, LVT Series 4-62
Radial Adjustable Y-Axis Driven Tools LB, LR, LU, LVT Series 4-63

VDI TOOLHOLDERS - STATIC

VDI Keyless Drill Chucks & Tappers

Super Precision Short Keyless Drill Chucks & Tension and Compression Tappers 4-16

VDI Standard Toolholders

APPLICATION DATA SHEET 4-1
Form A1 and A2 4-2
Form B-1 and B-2 4-3
Form B-3 and B-4 4-4
Form B-5 and B-6 4-5
Form B-7 and B-8 4-6
Form C-1 and C-2 4-7
Form C-1S and C2-S 4-8
Form C-3 and C-4 4-9
Form D-1 and D-2 4-10
Form D-1S1 and D-1S2 4-11
Form E-2 Boring Bar Holders . . . . . 4-12 & 13
Form E-3ECX and TG Collet Chucks 4-14
Boring Bar Sleeves 4-17
F-MKD Morse Taper Toolholders & CNC Lathe ECX/ER Collet Extensions 4-15
Plugs – Steel and Plastic 4-18
SPARE PARTS 4-19

VDI Toolholders for Mazak Machines

SQT & Multiplex (Forward, Reverse, Boring, Facing & U-Drill Holders) 4-64
SQT & Multiplex (Cut-Off, Double Turn, Double Boring Holders, Turret Caps) 4-65
SQT & Multiplex – BUSHINGS AND SPARE PARTS 4-66

VISES

ERON LOCK-TIGHT 5-AXIS MACHINE VISES 5-125

ERON LOCK-TIGHT HYDRAULIC MACHINE VISES MKIII 5-126

GERARDI STANDARD MODULAR VISES ..... 5-127 & 5-128

GIANNI SUFFRITI MACHINE VISES 5-124

KURT VISES

ANGLOCK D-Series Vises ..... 5-136 & 5-137
ANGLOCK ACCESSORIES – Swivel Base & Parallel Keeper 5-142
ANGLOCK PT Series Vises – MANUAL & HYDRAULIC ..... 5-143 & 5-144
HDL 4" ANGLOCK Vise ..... 5-145 & 5-146
HDL 6" ANGLOCK Vise ..... 5-147 & 5-148
VERSATILE LOCK Vises-MANUAL, HYDRAULIC & AIR (Standard & Short) ..... 5-138 & 5-139
VERSATILE LOCK Vises-MANUAL, HYRDRAULIC & AIR (Reverse & Short Reverse) ..... 5-140 & 5-141
HDL 4" CARVLOC Tower Vise ..... 5-152 & 5-153
HDL 6" CARVLOC Tower Vise ..... 5-154 & 5-155
DOUBLELOCK Vises - MANUAL ..... 5-156 & 5-157
DOUBLELOCK Vises – HYDRAULIC ..... 5-158 & 5-159
CARVLOCK Clustertower ..... 5-149 & 5-150
Jaw Kits for CARVLOCK Tower 5-151
Self-centering Vises ..... 5-160 & 5-161

VISE ACCESSORIES

Innerlock & Standard Vise Jaw Plates 5-162
Grove Lock and Anglock Workstops and Reversible Style Step Jaw Plates 5-163
Vise Keys 5-164

TECHLEADER VISES & TOMBSTONES

MC BHV Hydraulic & Angle Lock Vises 5-129
MC BMV Mechanical Power Vise 5-130
MC BHV & BMV Hydraulic & Angle Lock Vise Jaws 5-131
AHV & AH Hydraulic Vises 5-132
HW Hydraulic & KR Precision Vises 5-133
KR 6G & VA Vises 5-134
AJB-HB & MP 2 & 4 Face Tombstones 5-135

TECHLEADER® TOOLING INC.

SALES POLICY

PRICES:
All prices in our published price lists are subject to change without notice. Typographical errors are subject to corrections.

MINIMUM ORDER:
Orders under $25.00 will be assessed a $5.00 handling charge.

TAXES:
All taxes are extra, if applicable. Proof of exemption must be on hand prior to shipment.

ORDER CANCELLATION:
Orders for non-standard or non-stocking items cannot be cancelled.

TERMS:
Net 30 days from date of invoice on approved accounts only. Accounts over 30 days will be assessed financing charges at 1.5% per month. Any account which is not current will be shipped on a C.O.D. basis.

FREIGHT:
All merchandise shipped is F.O.B. our warehouse unless otherwise quoted.

CLAIMS:
UPS Shipments
Please notify your local UPS office immediately about either lost or damaged merchandise. Keep all damaged merchandise and containers until a UPS representative makes their inspection. Notify us also so we can reship your merchandise and put in our claim. We will need to be notified of any items that may need to be reshipped and put in for UPS claim.

Truck Shipments:
We are not responsible for any lost or damaged merchandise shipped by common carriers, so please check the merchandise you have received carefully before signing your delivery receipt. Please note any shortages or damages on your delivery receipt and contact the common carriers claims department immediately.

WARRANTY:
Our tooling lines normally carry a manufacturers guarantee of ninety days from the date of purchase covering faulty workmanship and material, except in the case of electrical or electronic components which are guaranteed for sixty days. However, our guarantee is limited by that of our supplier and may be supplied on request. This warranty shall not apply to any of our products which have been repaired or altered except by ourselves, or which have been subjected to misuse, negligence or accident. The above mentioned provisions do not extend the original warranty period of any product which has either been repaired or replaced by ourselves. Any item being returned to our warehouse for repair or replacement under warranty must be shipped to us freight prepaid, any collect shipments will be refused.

RESPONSIBILITY:
The value of the defective product or material sent in error is our only liability. All technical data has been supplied by the manufacturer and is listed only as a convenience. We do not warrant or represent that the merchandise complies with the provisions of any law, particularly including the Walsh-Healey Public Contracts Act and the Occupational Safety and Health Act of 1970 and regulations promulgated thereunder, unless the manufacturer so warrants.

RETURNS:
No material will be accepted for return later than sixty days after shipping, unless the goods were sent out on approval or on consignment (arranged in advance). To return any item within this sixty day period, you must call our customer service department, small tooling division, for a return authorization number. Please have our invoice and/or order number ready for better service. All returns must be unmarked and in original packing. Transportation on all return goods must be prepaid to our warehouse. Goods may be subject to a twenty percent restocking charge (minimum $10.00 charge on any return). Any goods being returned which have been used or abused or are out of the original packing will not be accepted back for credit.

DIMENSIONS & SPECIFICATIONS:
We try to provide accurate dimensions and specifications but changes can occur over time. These dimensions and specifications are given as guidelines and subject to change without notice.

Leading the Way...

In CNC Tooling Technology in the 21st Century

Leading the Way...

In CNC Tooling Technology in the 21st Century

In the U.S.A. contact:

TECHLEADER® TOOLING INC.

Techleader Tooling Inc.
3606 California Road
P.O. Box 957
Orchard Park, N.Y. 14127
Order Desk: 1-800-688-6810
Tel.: 1-716-662-6818 • Fax: 1-716-662-8965
Web: www.Techleader.com
E-mail: tools@techleader.com

In Canada contact:

MACHINERY CANADA
A DIVISION OF TURRET LATHE SERVICES LIMITED

Machinery Canada
Division of Turret Lathe Services Ltd.
963 Martin Grove Road
Rexdale, Ontario M9W 4V6
Order Desk: 1-800-268-1484
Tel.: 1-416-244-5361 • Fax: 1-416-241-2396
Web: www.MachineryCanada.com
E-mail: tools@machinerycanada.com

CONTACT YOUR LOCAL DISTRIBUTOR

Printed In Canada 0903 Price: $5.00