FG 433 / 434 Universal Front Fork kit
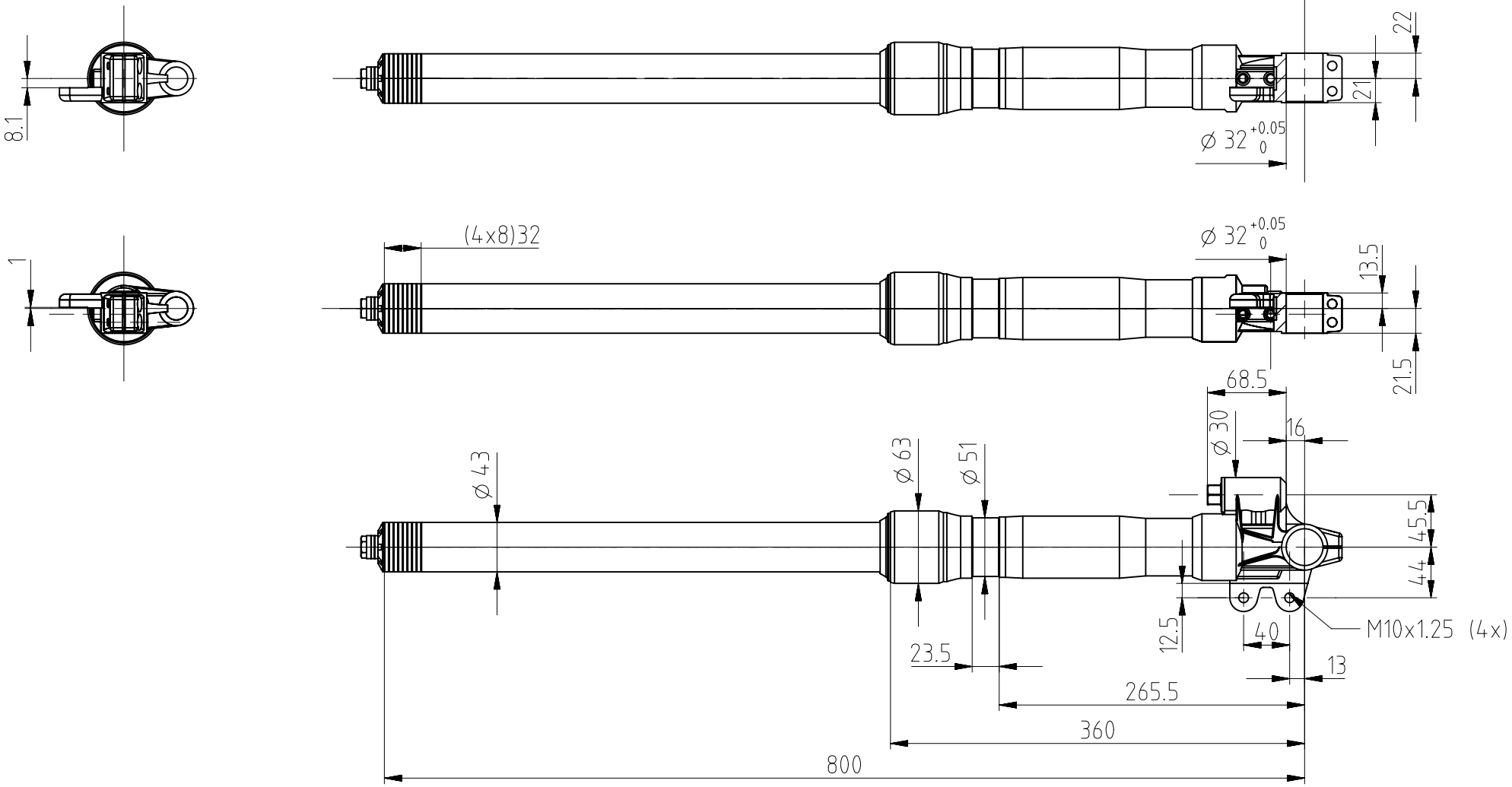
Setup data	
Compression	12 clicks out
Rebound	12 clicks out
Spring pre-load	5mm
Spring rate	9.5 N/mm
Oil level	120 mm