PRS1 V4R (FM) SETUP SHEET

PR RACING

NAME _____ DATE _____ TRACK/CITY _____ EVENT _____

FRONT SUSPENSION

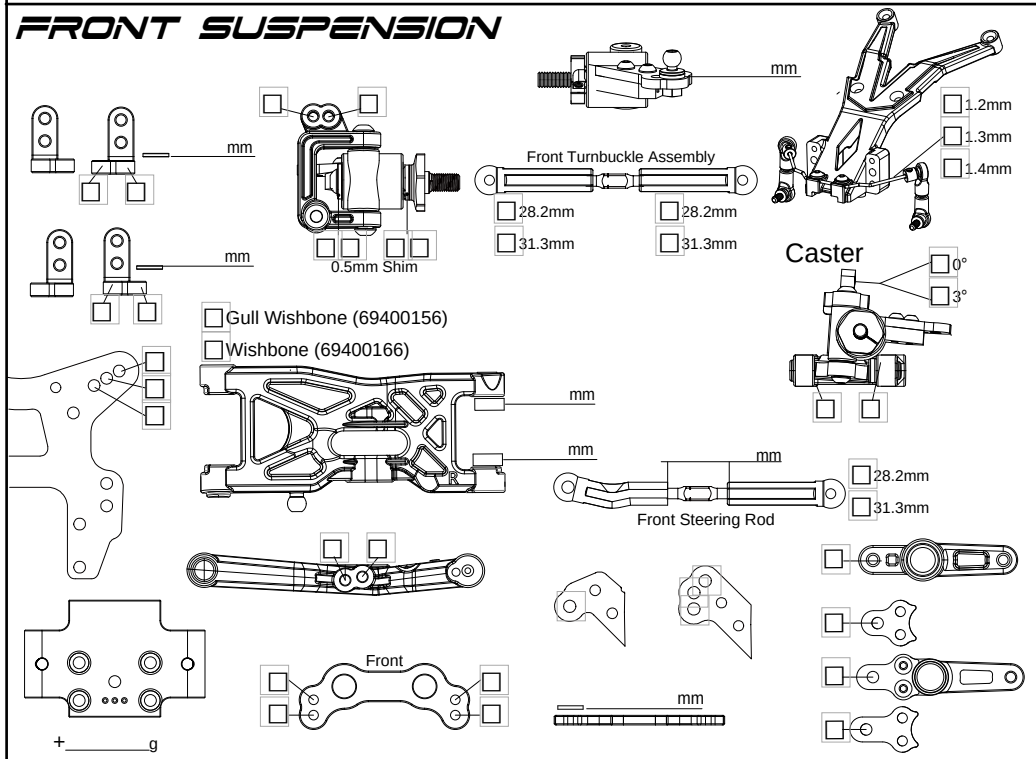

Shock Body
- 12.0mm
- 12.8mm
- 0.36mm Shim

Oil	
Piston	
Spring	
Downstop	
Upstop	
Length	
O-Ring	

Camber	
Ride Height	
Toe	

REAR SUSPENSION

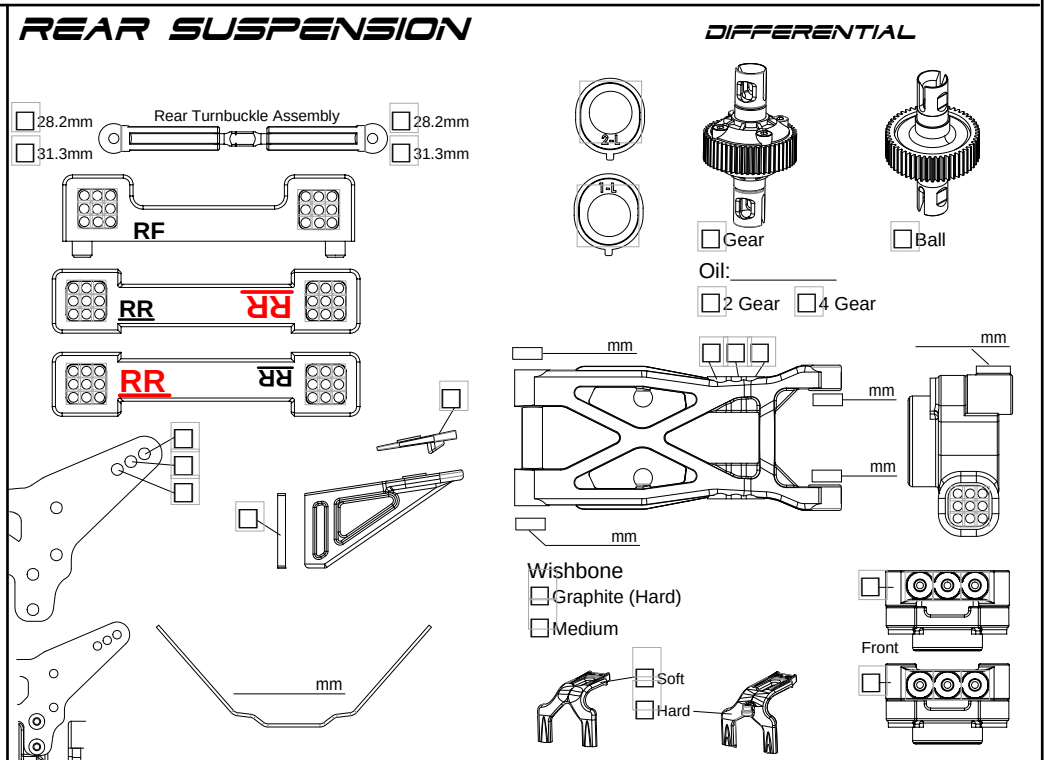

DIFFERENTIAL

- Gear
- Ball

Oil:_____

- 2 Gear
- 4 Gear

Wishbone
- Graphite (Hard)
- Medium
- Soft
- Hard

Front

Shock Body
- 12.0mm
- 12.8mm
- 0.36mm Shim

Oil	
Piston	
Spring	
Downstop	
Upstop	
Length	
O-Ring	

Camber	
Ride Height	
Toe	

FRONT

	Motor
Tire	Pinion
Insert	Spur
Wheel	ESC

REAR

	Servo
Tire	Profile: ☐ Std. ☐ Low
Insert	Battery
Wheel	Size: ☐ Std. ☐ Low

TRACK CONDITIONS

Layout	☐ Open	☐ Mixed	☐ Tight
Traction	☐ Low ☐	☐ Medium ☐	☐ High
Surface	☐ Bumpy	☐ Smooth	
Composition	☐ Astroturf	☐ Carpet	☐ Clay
☐ Dirt	☐ Grass	☐	
Condition	☐ Blue Groove	☐ Hard Packed	☐ Loamy
☐ Dusty	☐ Dry	☐ Wet	

AERODYNAMICS

Body
Wing
Front Wing

WEIGHT

Under Servo
Under ESC
Under Battery

WEIGHT DISTRIBUTION

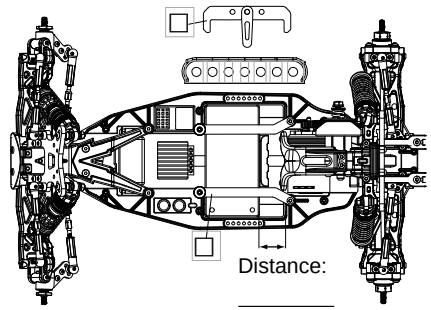

Distance: _____

Arn0 - Petitrc