5′ x 5′

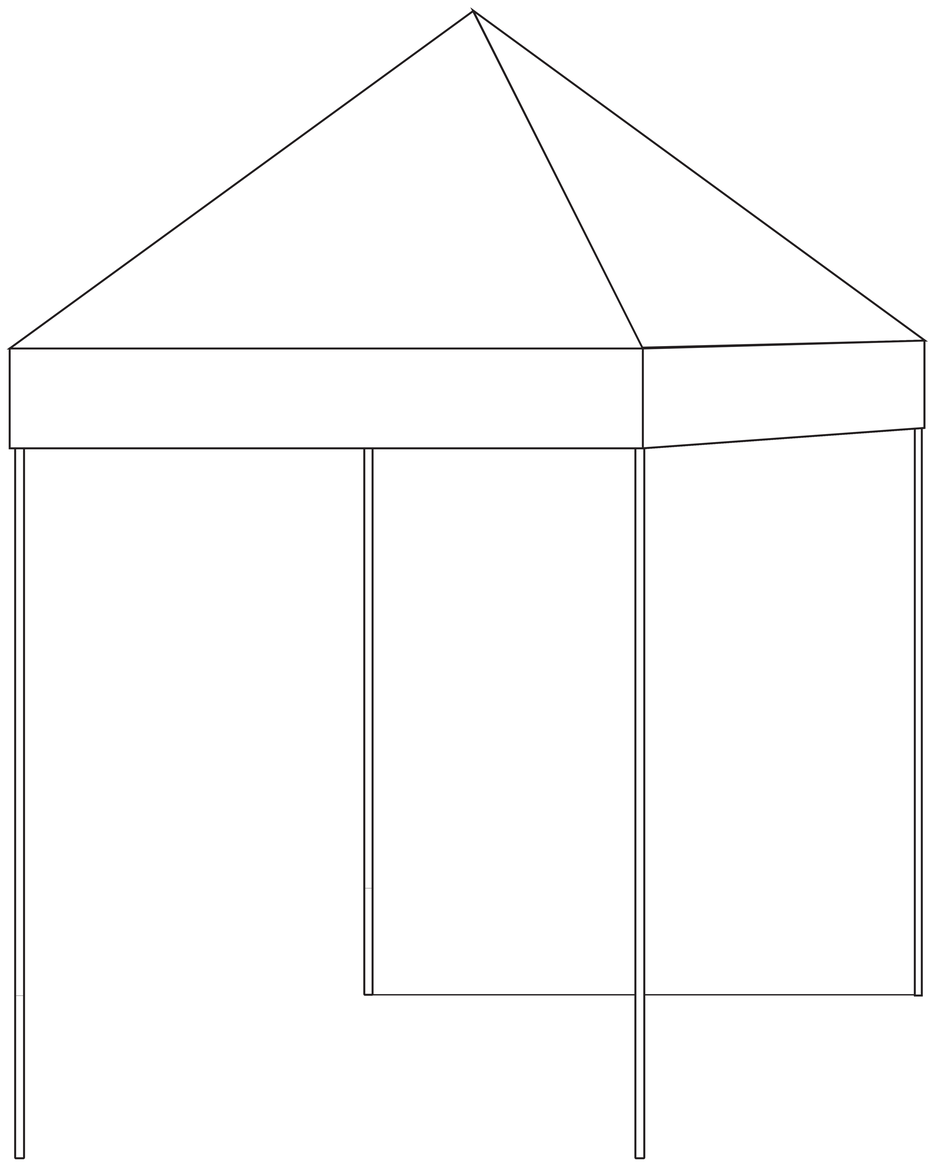

Valance

Full back wall

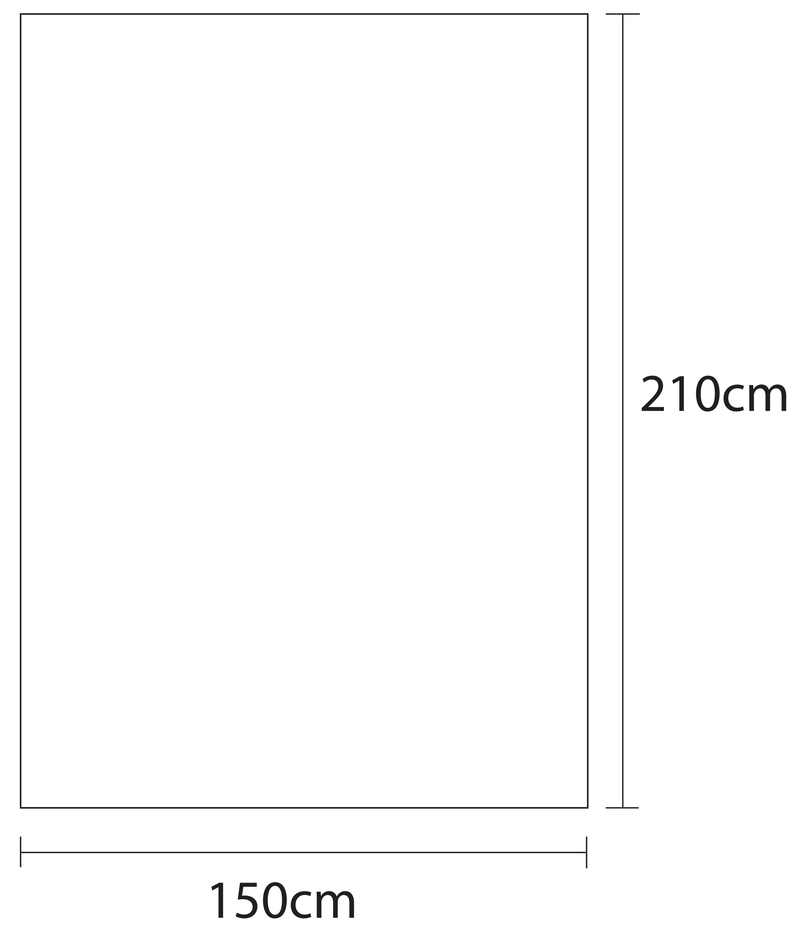
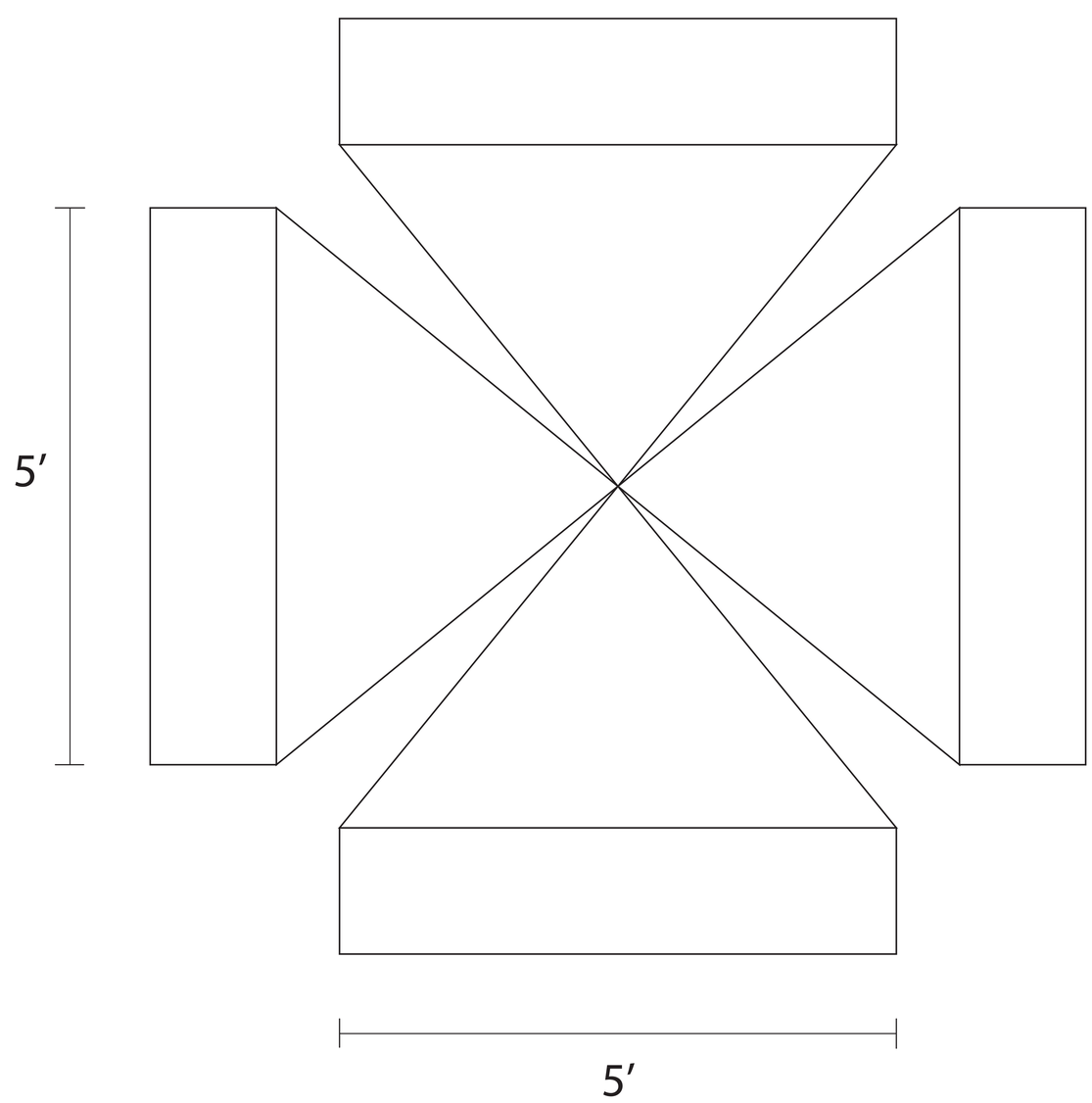
Canopy Top