5′ x 5′

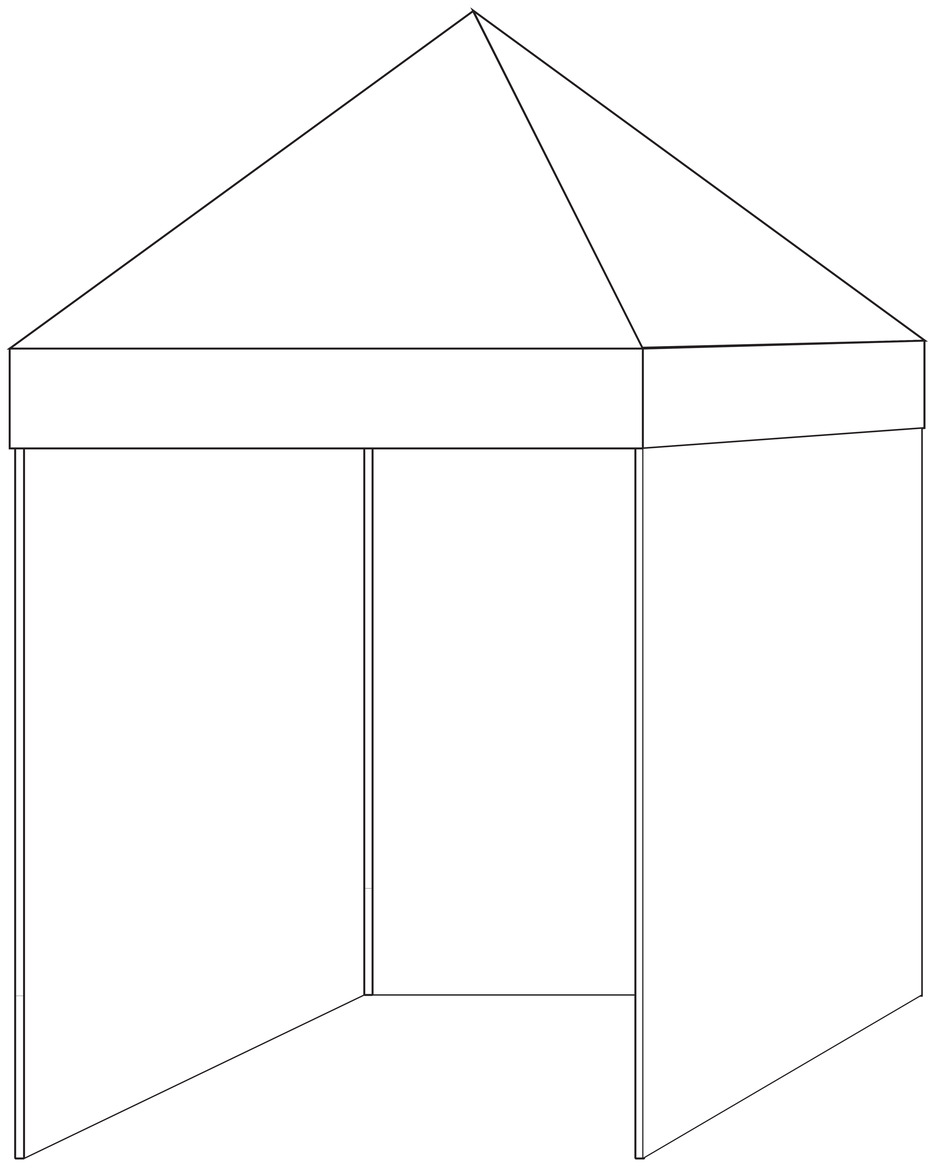

Valance

Full side wall

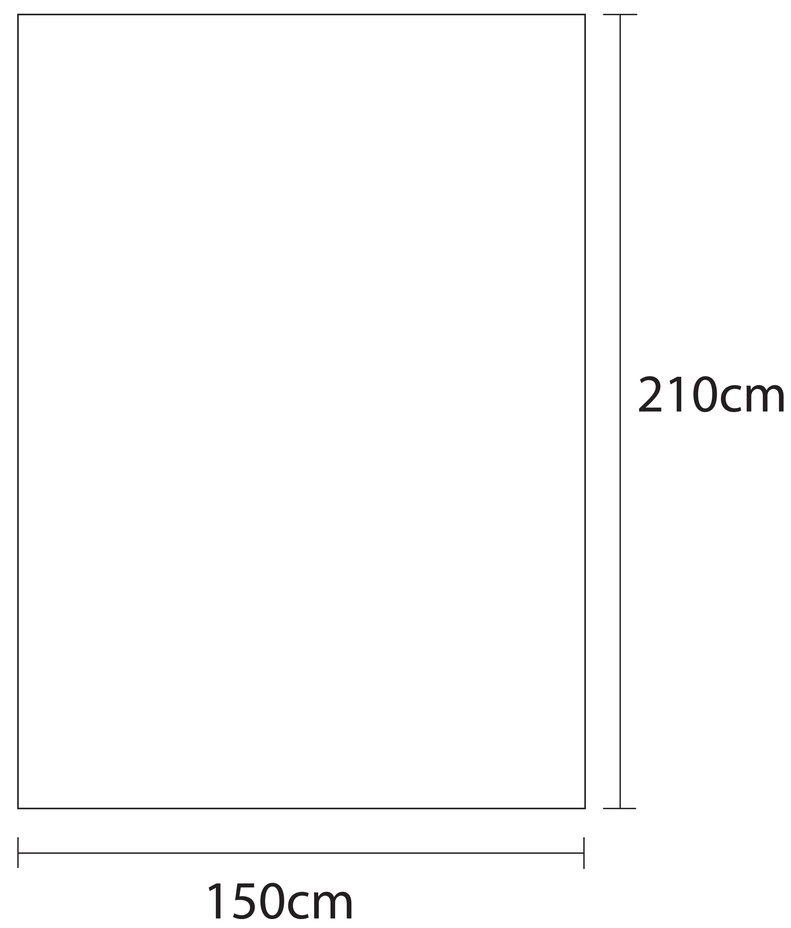

Canopy Top

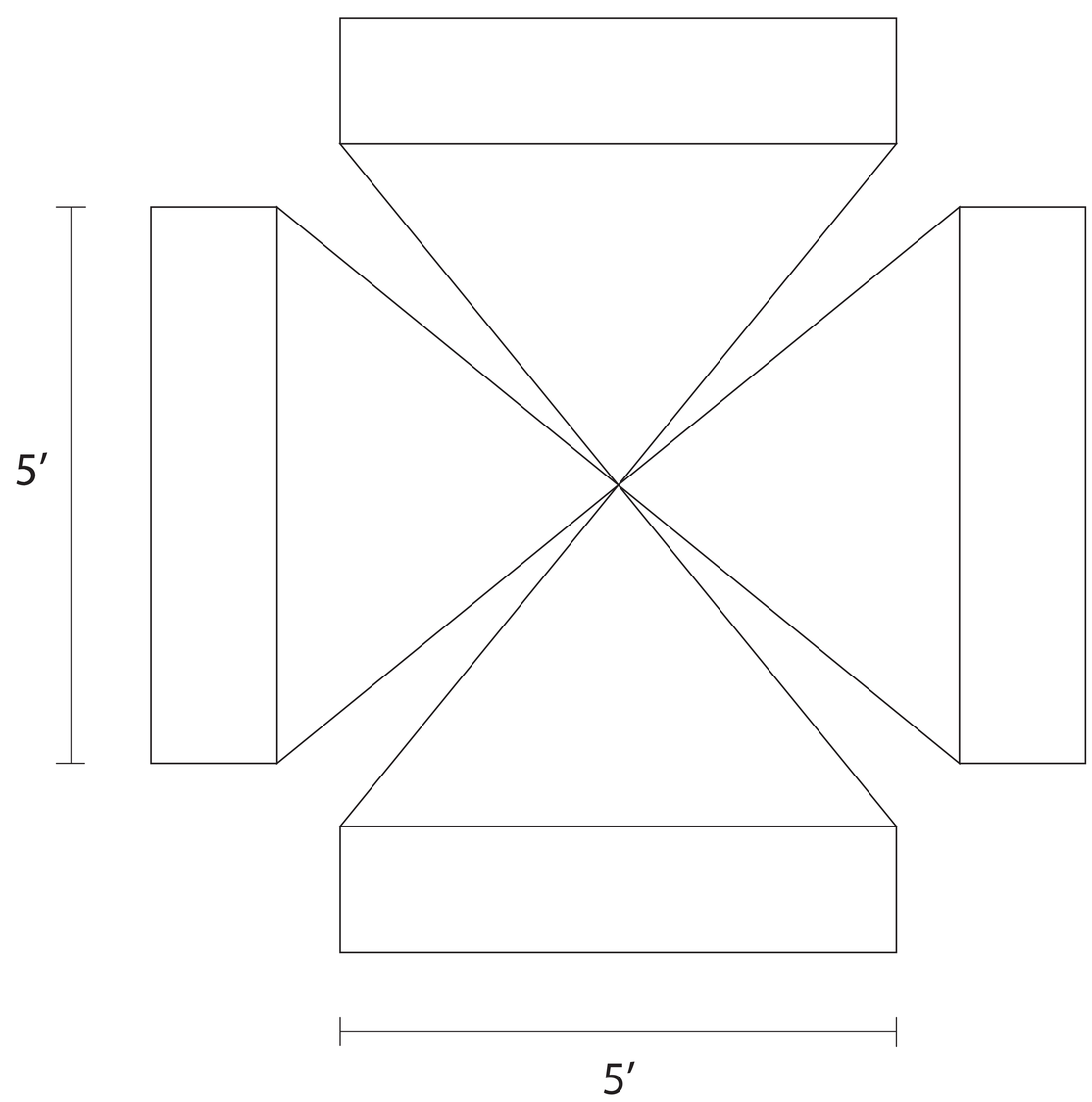
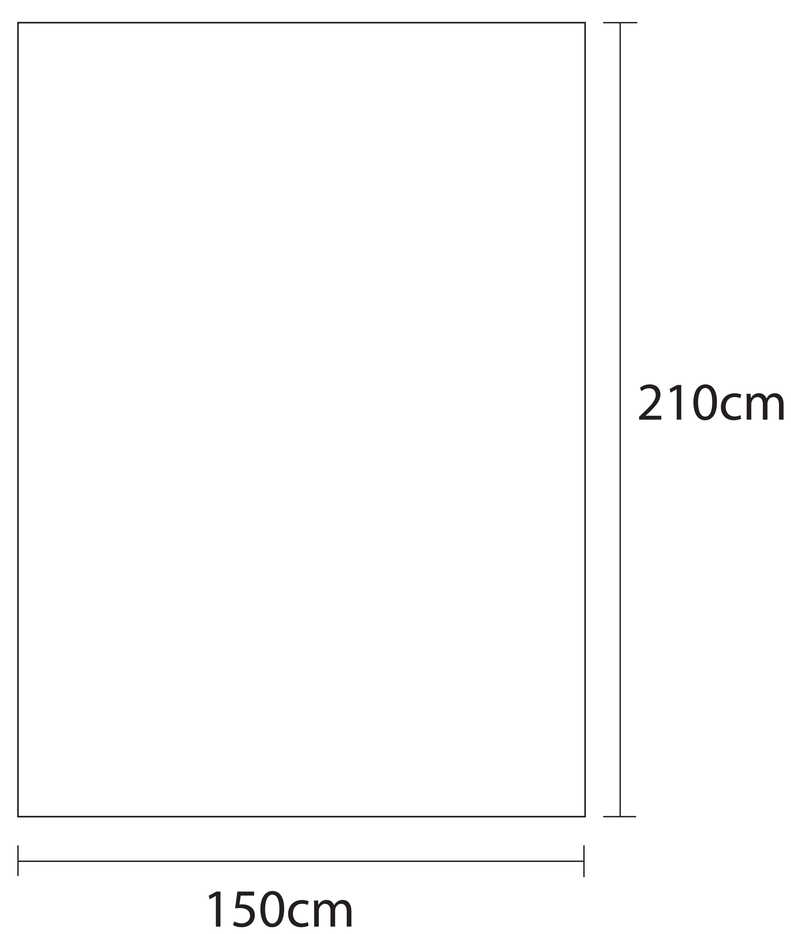
Full back wall