Product Name: 10’ x 15’ Premium Tent w/ Full Color Canopy **SKU Name:** TNT15

*****WE CAN NO LONGER MAKE ANY CHANGES ONCE APPROVED AND PRINTED.*****

Canopy

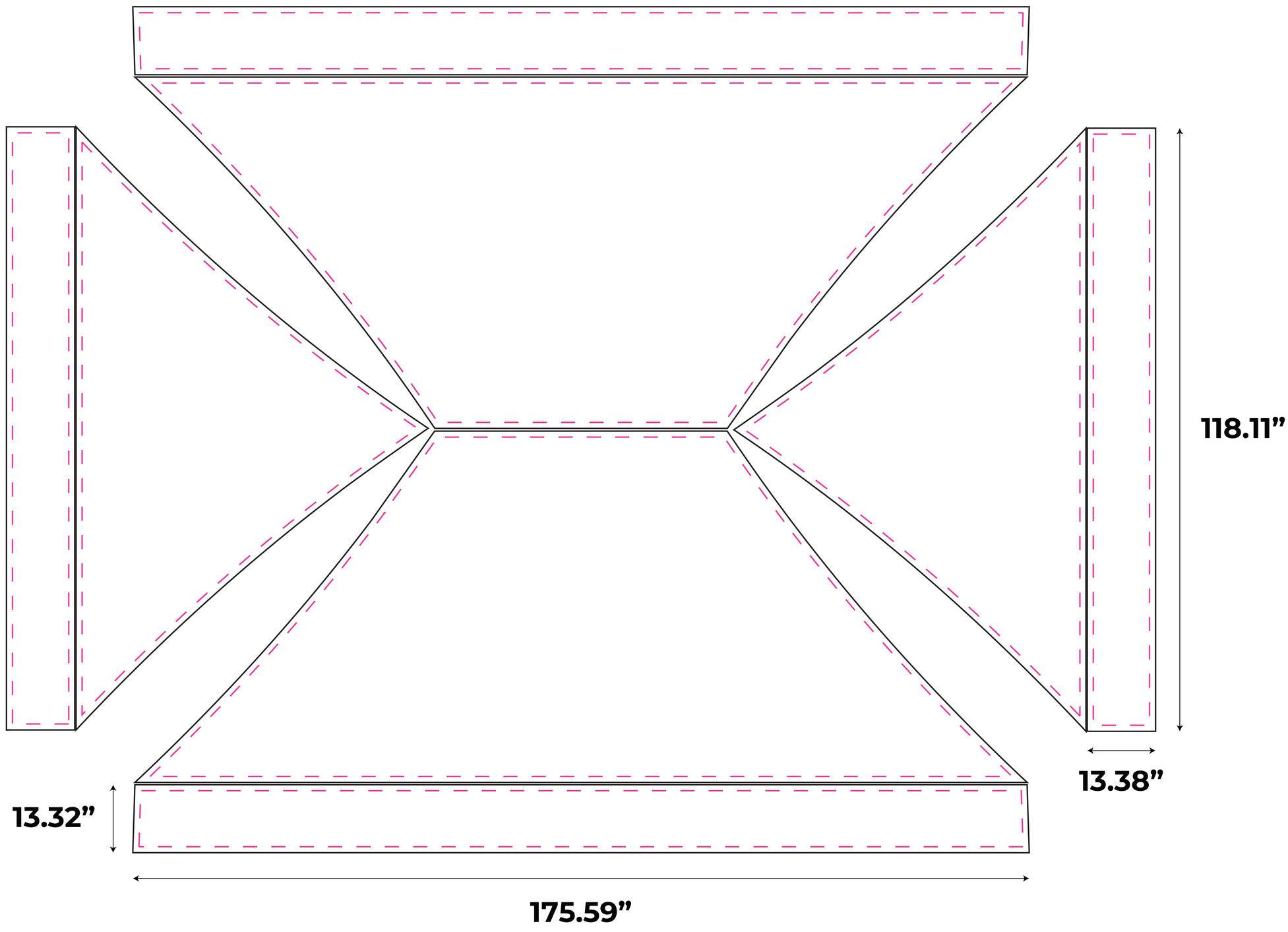

PROOF SCALED TO 50%

Disable the safe lines “---” when saving the proof.

PMS Colors

- PMS XXXX C
- PMS XXXX C
- PMS XXXX C
- PMS XXXX C
- PMS XXXX C
- PMS XXXX C
- PMS XXXX C
- PMS XXXX C
- PMS XXXX C
- PMS XXXX C

DISCLAIMER **Artist:** xxxxxx

- Make sure all spelling and artwork is correct.
- Proofs and sizes may not always be 100% accurate.
- Perfect color matches are not guaranteed without a standard Pantonce C reference.
- The colors you see on your monitor screen may vary from the actual printed product.