3m x3m

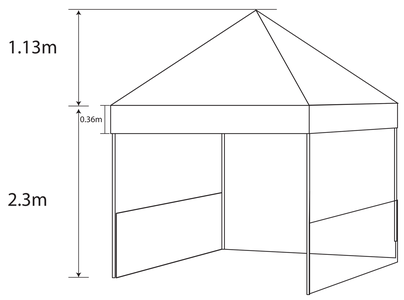

Canopy top

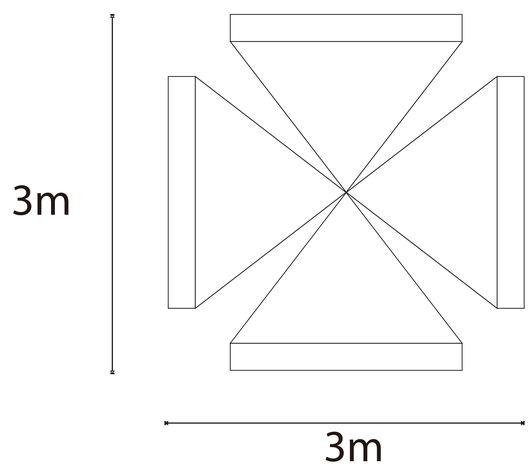

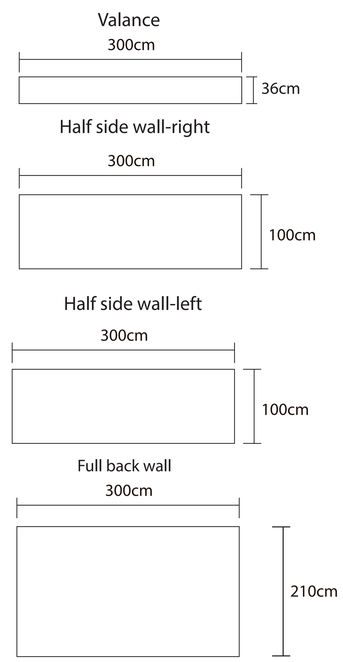

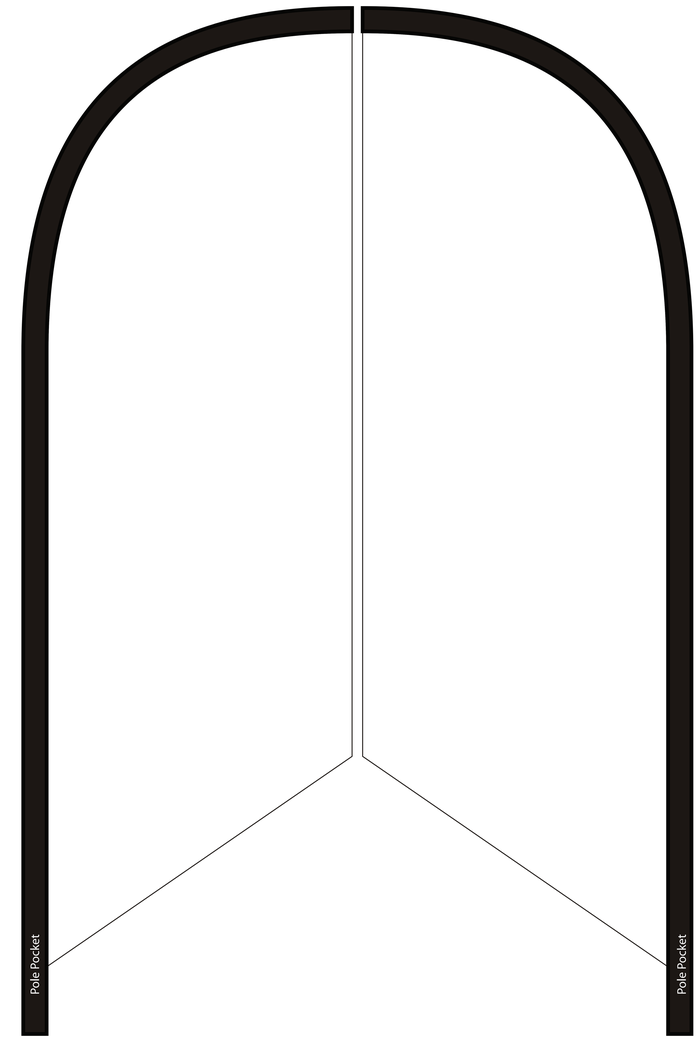

Feathered Flag - 8' - Angled
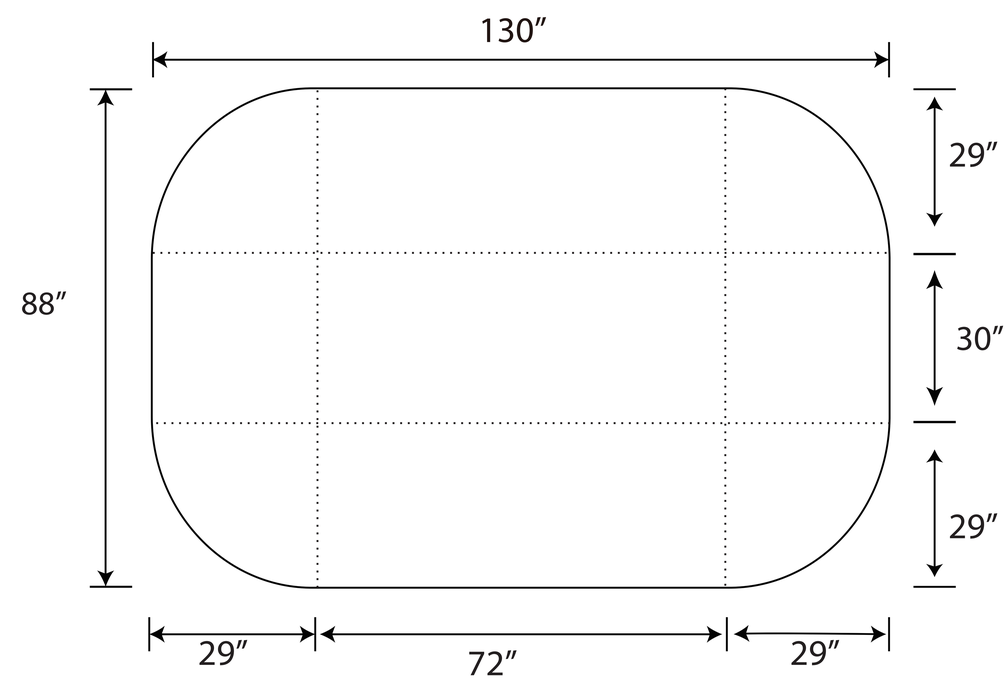
OPTION1 - Loose Table Cover (Most Popular)