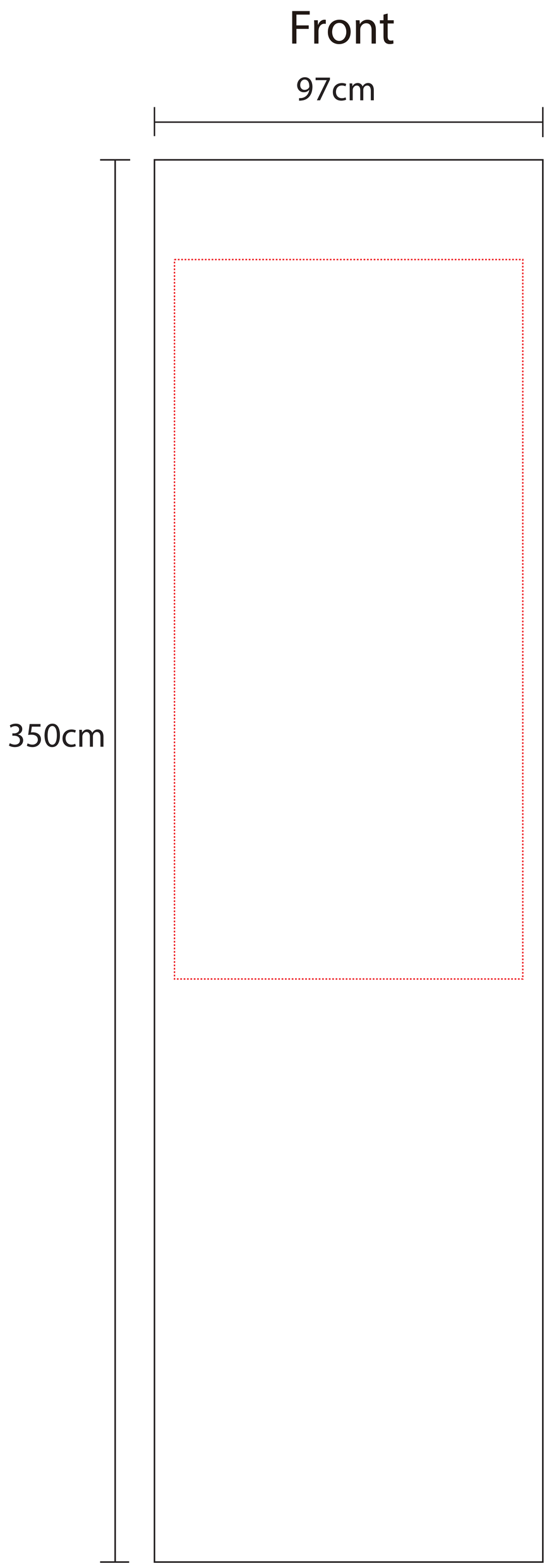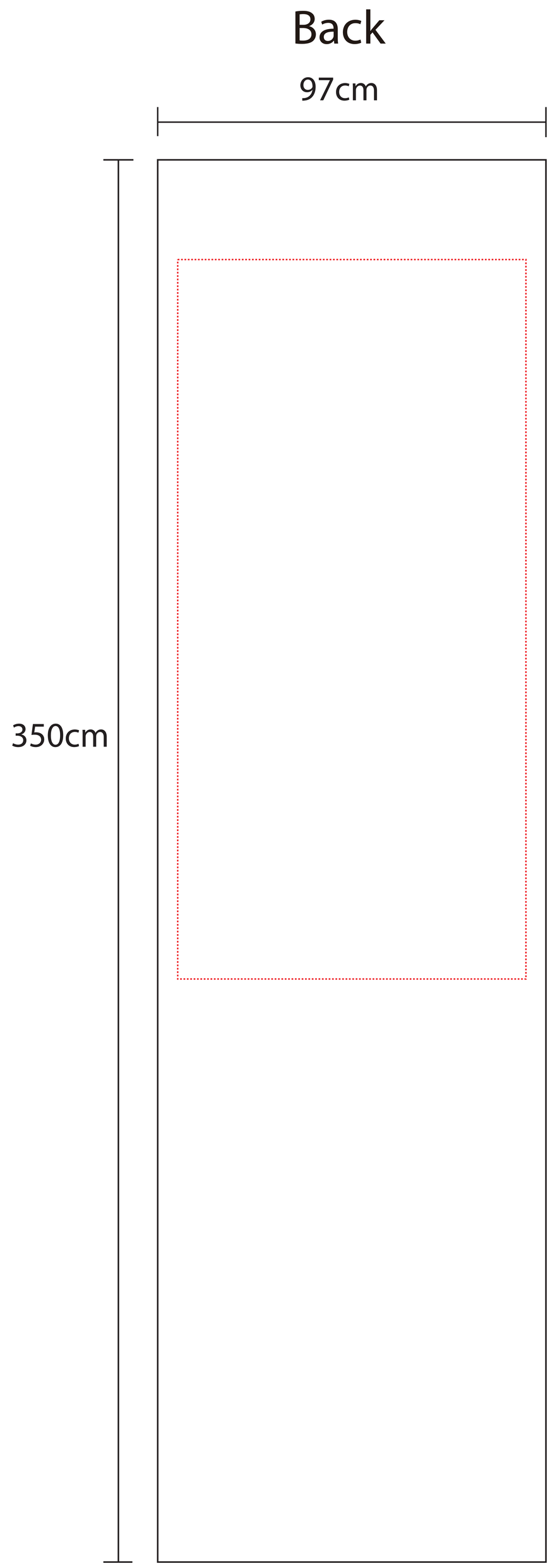Snake Shaped Tension Fabric Banner Stand Double Sided