Product Name: 6' Loose Table Cover with Open Back **SKU Name:** TB6THOB

*****WE CAN NO LONGER MAKE ANY CHANGES ONCE APPROVED AND PRINTED.*****

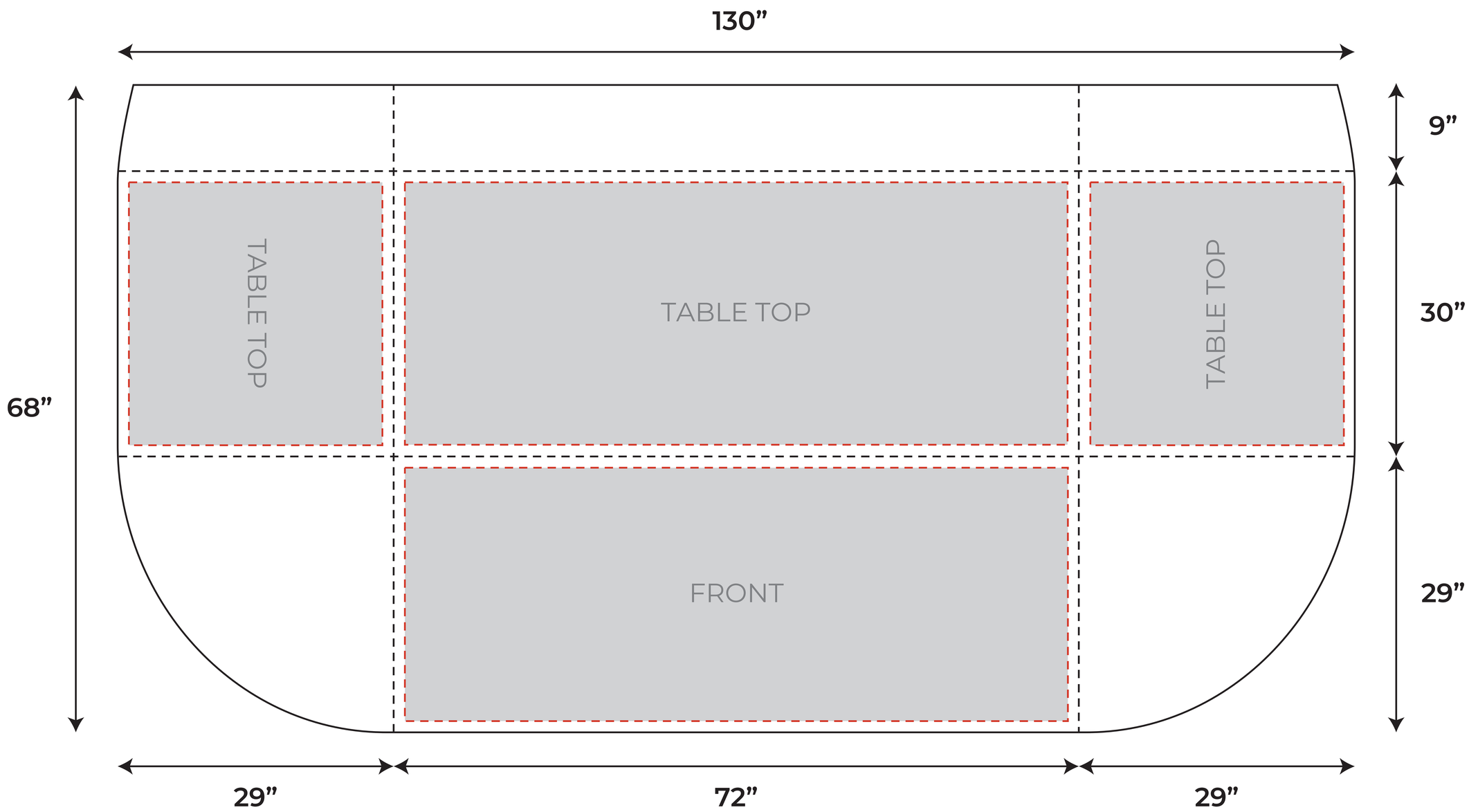

PROOF SCALED TO 75%

Disable the safe lines "---" when saving the proof.

PMS Colors

- PMS XXXX C
- PMS XXXX C
- PMS XXXX C
- PMS XXXX C
- PMS XXXX C
- PMS XXXX C
- PMS XXXX C
- PMS XXXX C
- PMS XXXX C
- PMS XXXX C

DISCLAIMER **Artist:** xxxxxx

- Make sure all spelling and artwork is correct.
- Proofs and sizes may not always be 100% accurate.
- Perfect color matches are not guaranteed without a standard Pantonce C reference.
- The colors you see on your monitor screen may vary from the actual printed product.