Modular Tension Fabric Display Kit 2
1220x2130mm

Front

914x1220mm
Front

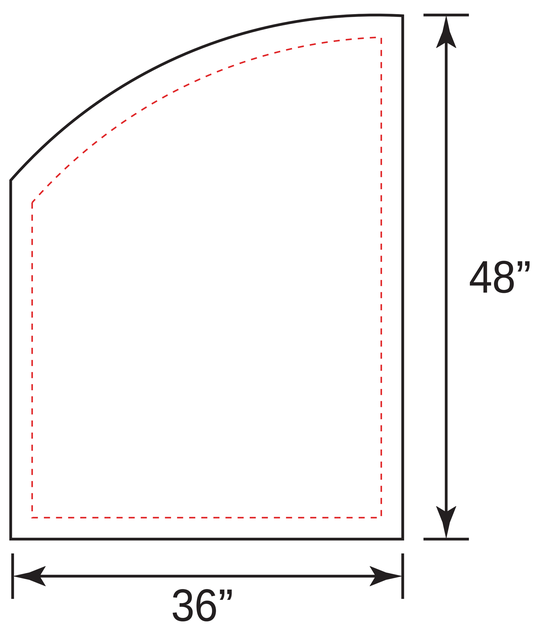

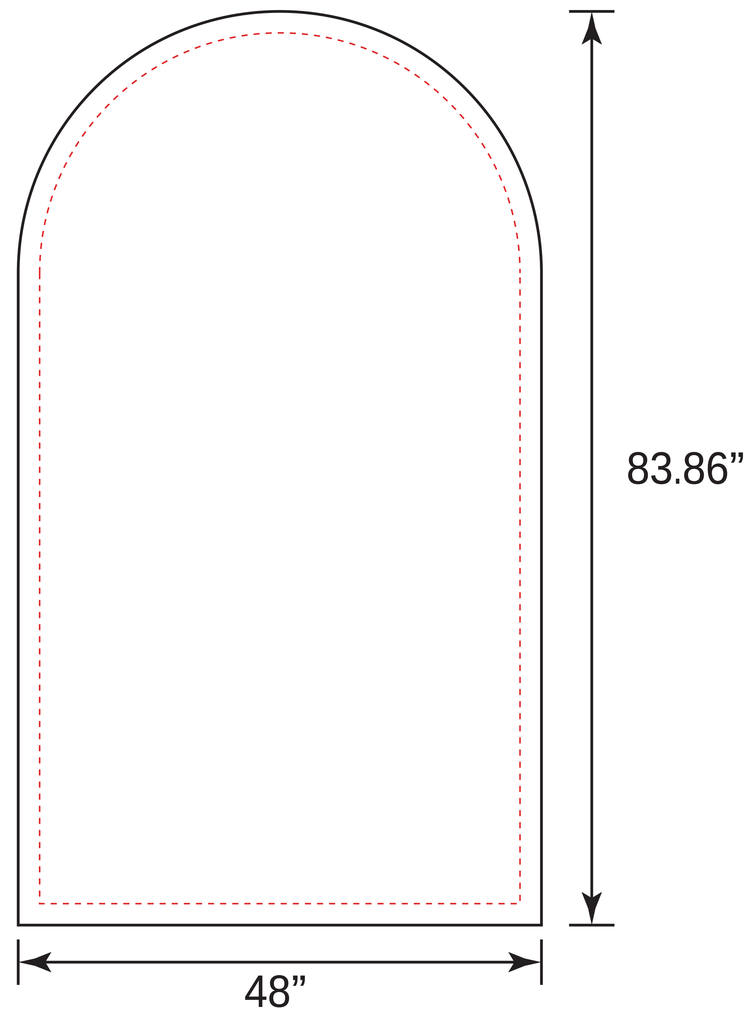

914x1830mm
Front

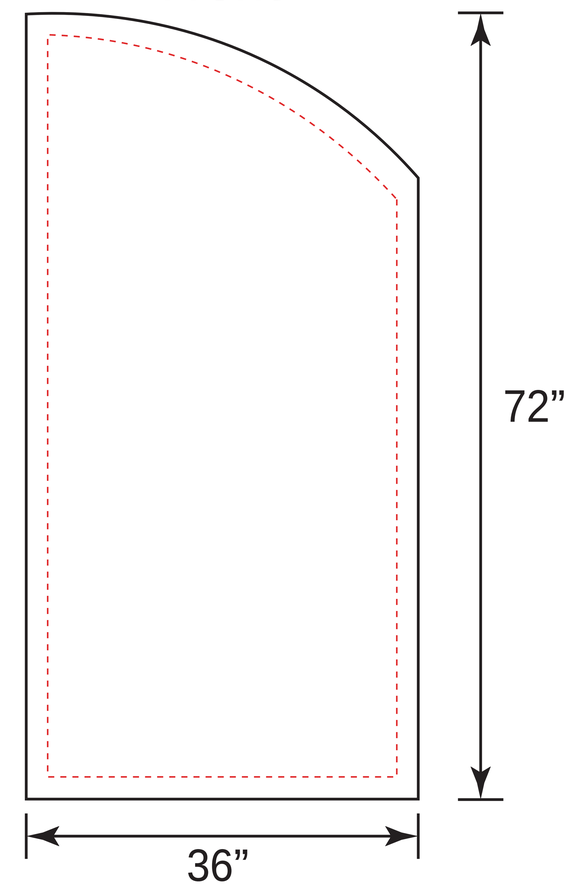
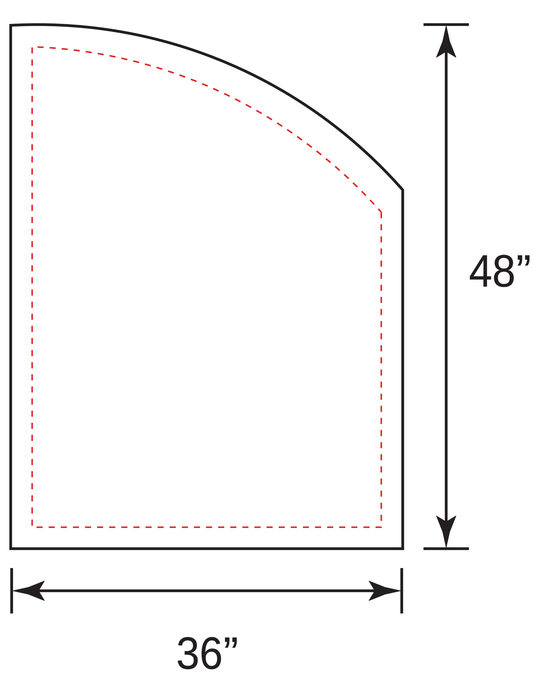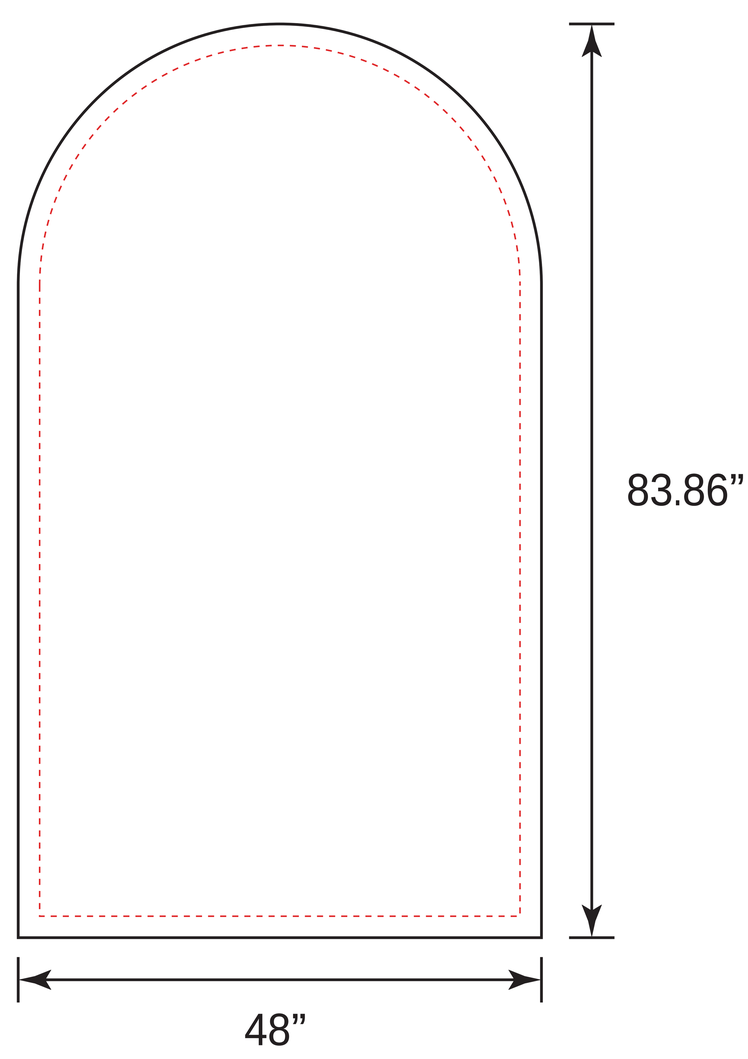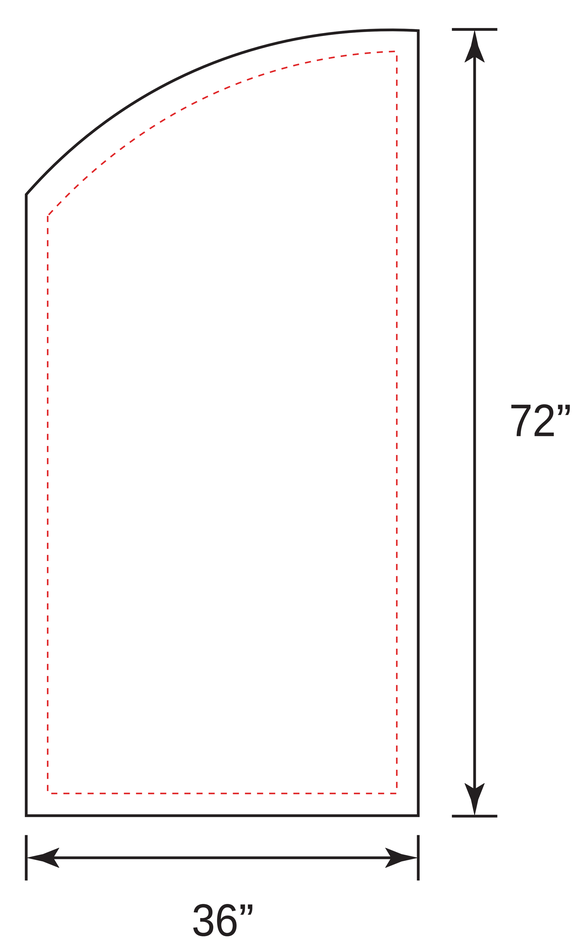
Back