Windsock Car Flag

Front

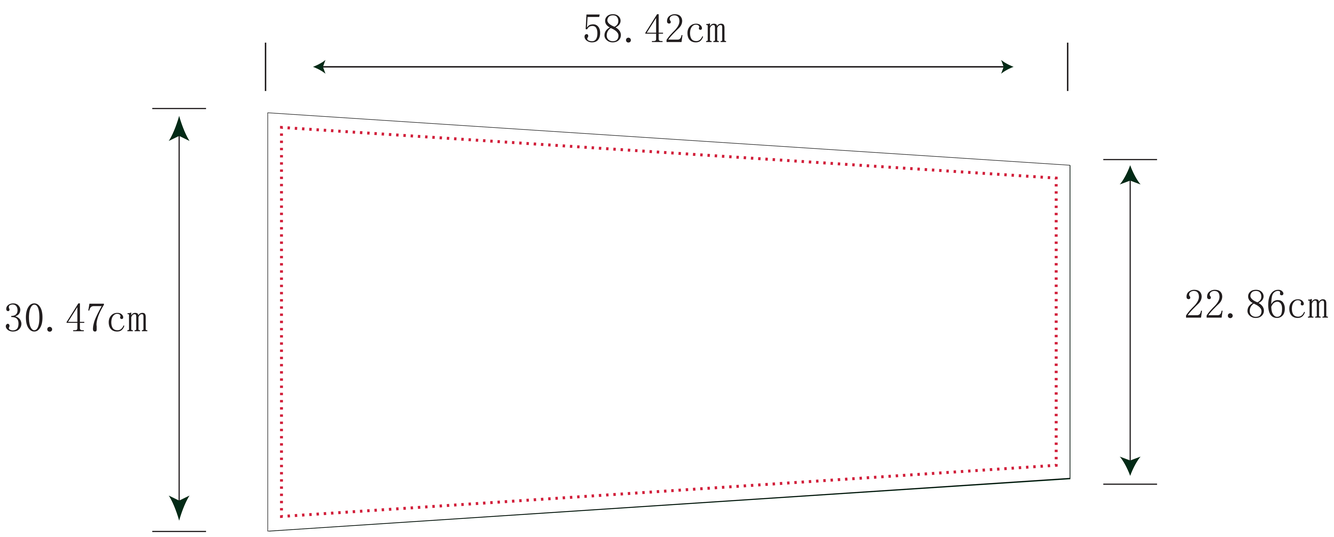
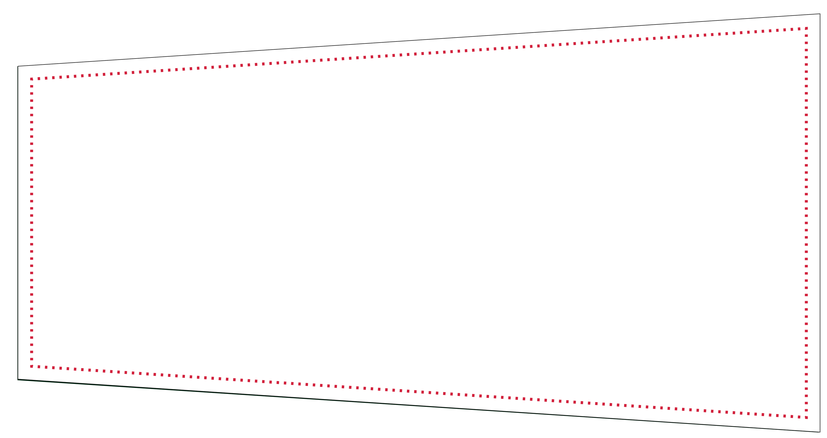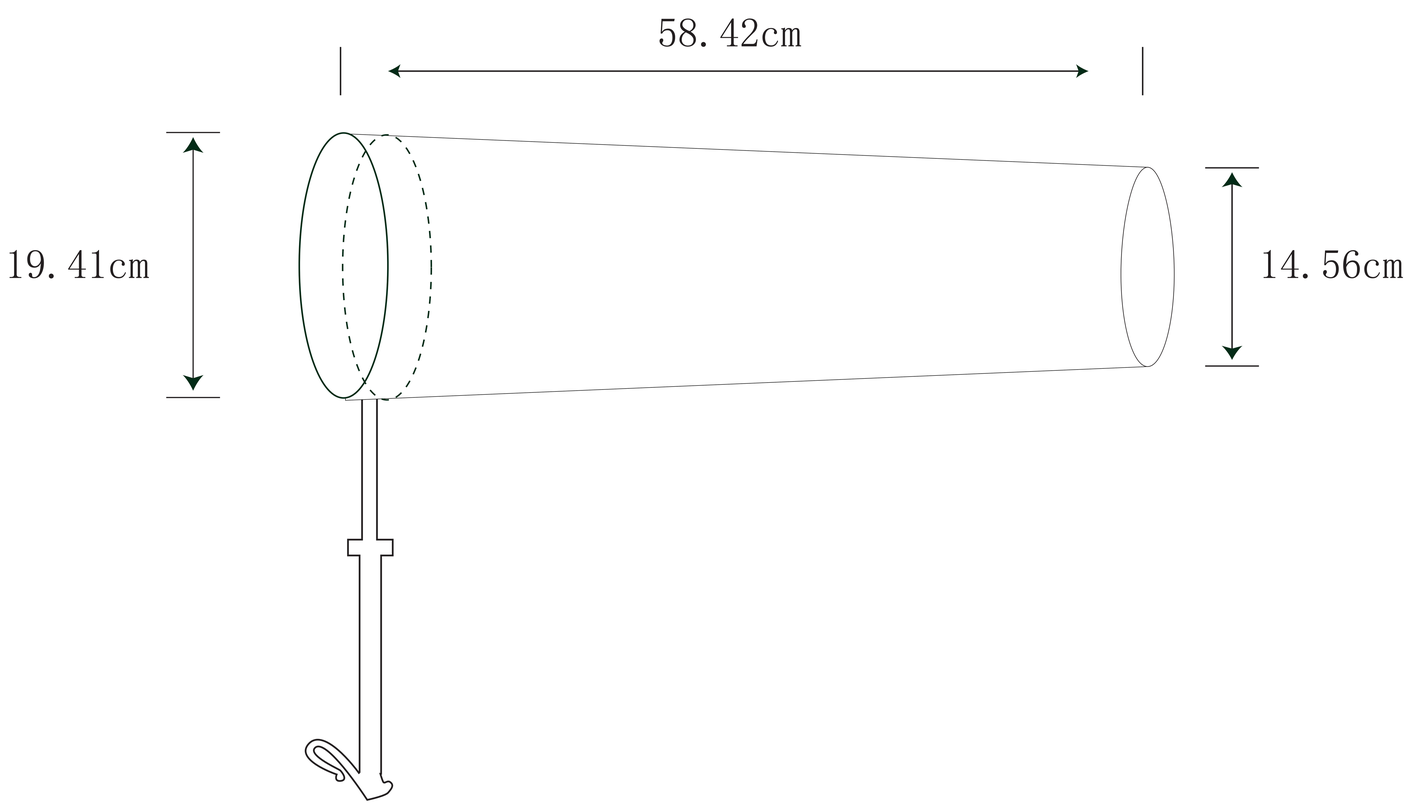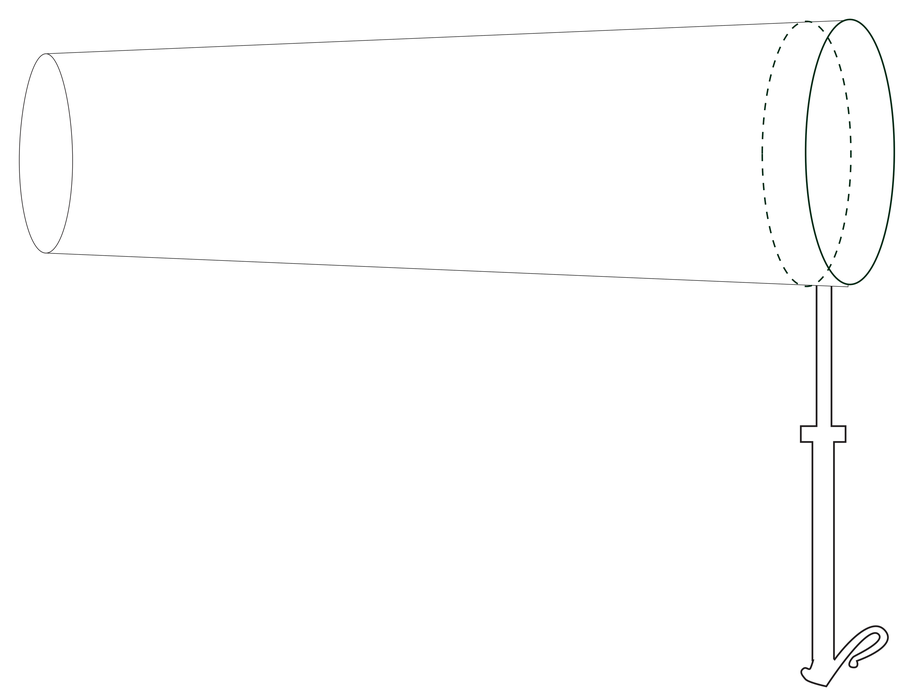
Back