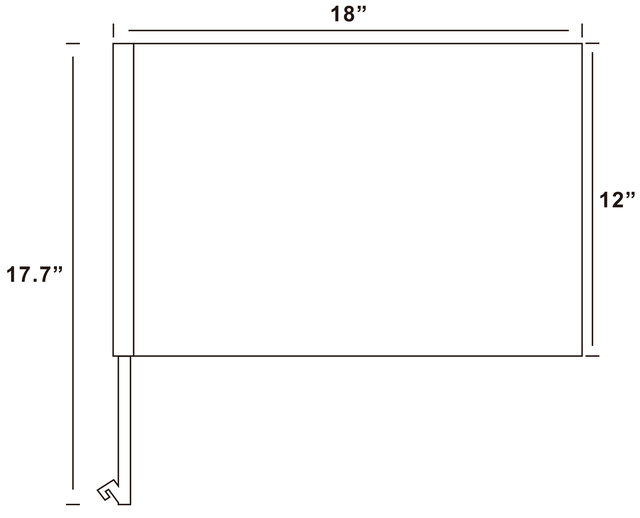


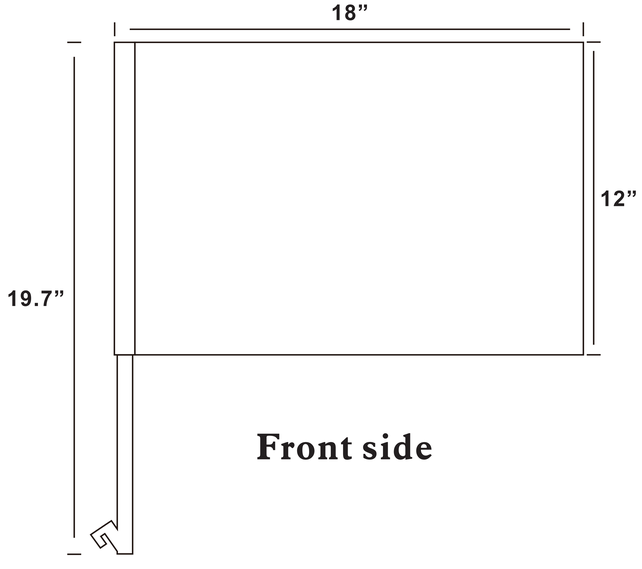


**Front side**

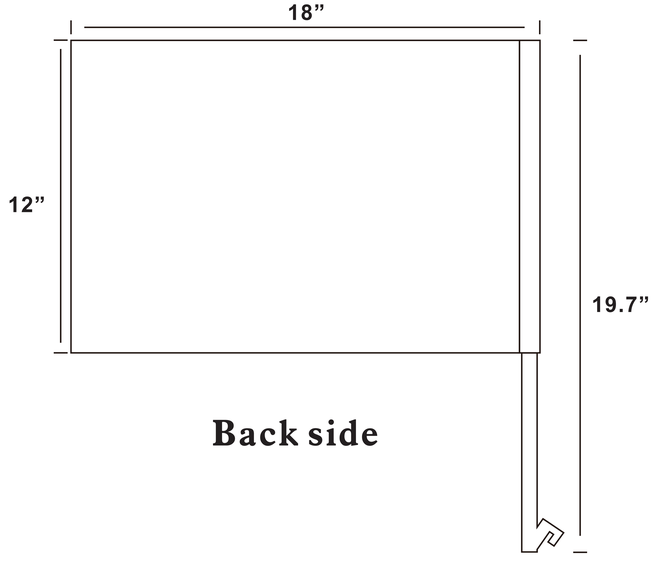


**Back side**