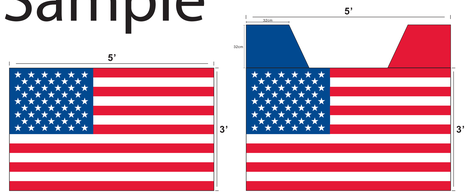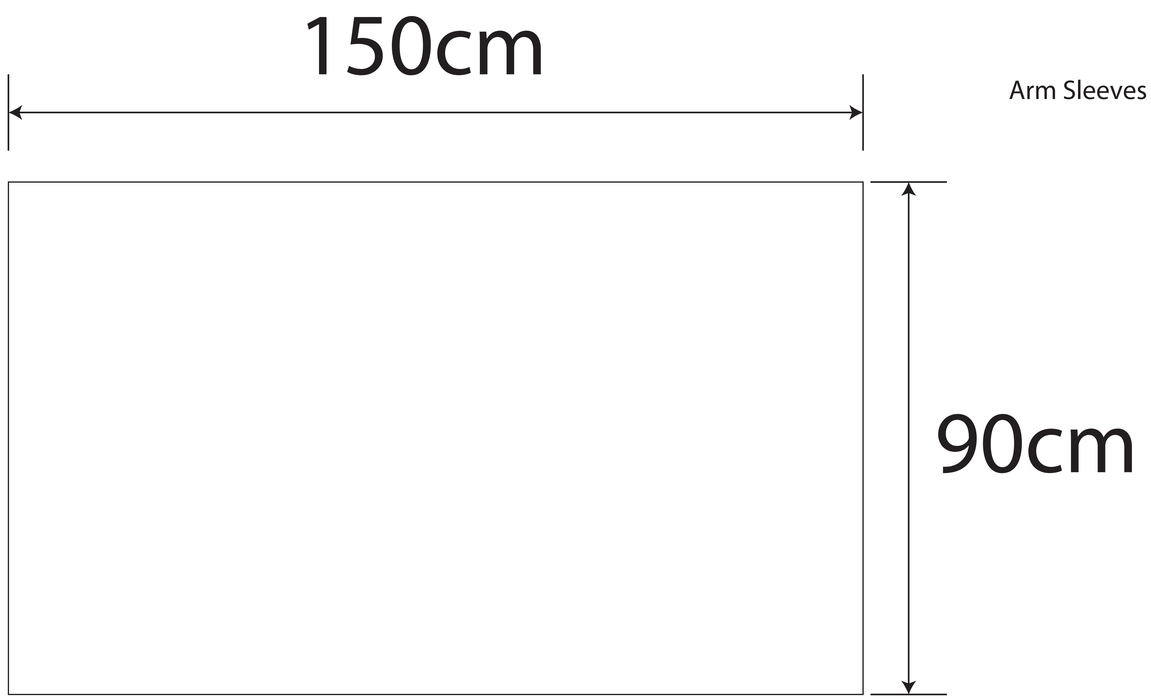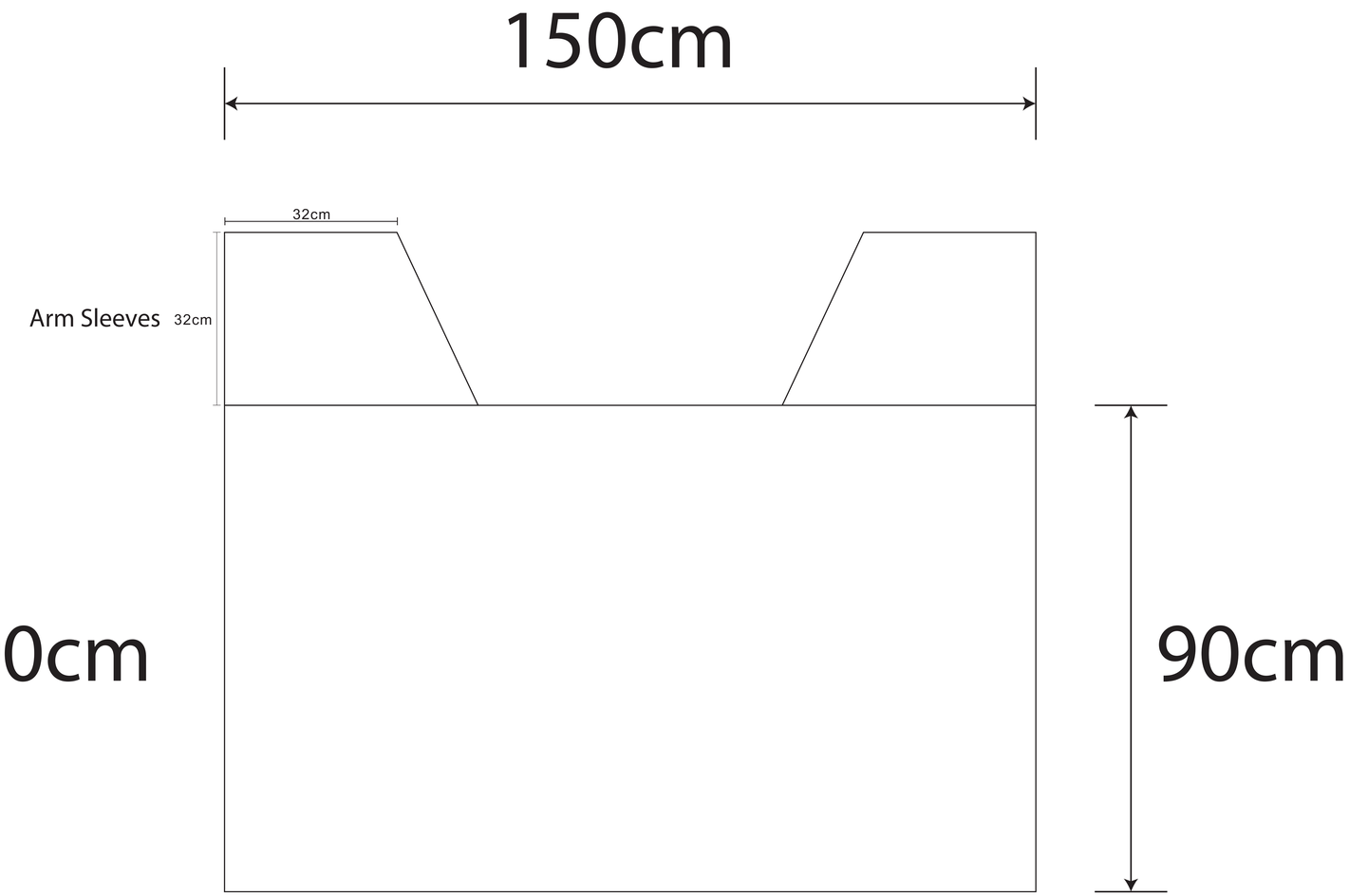Sample