CANOPY TOP

10′x20′

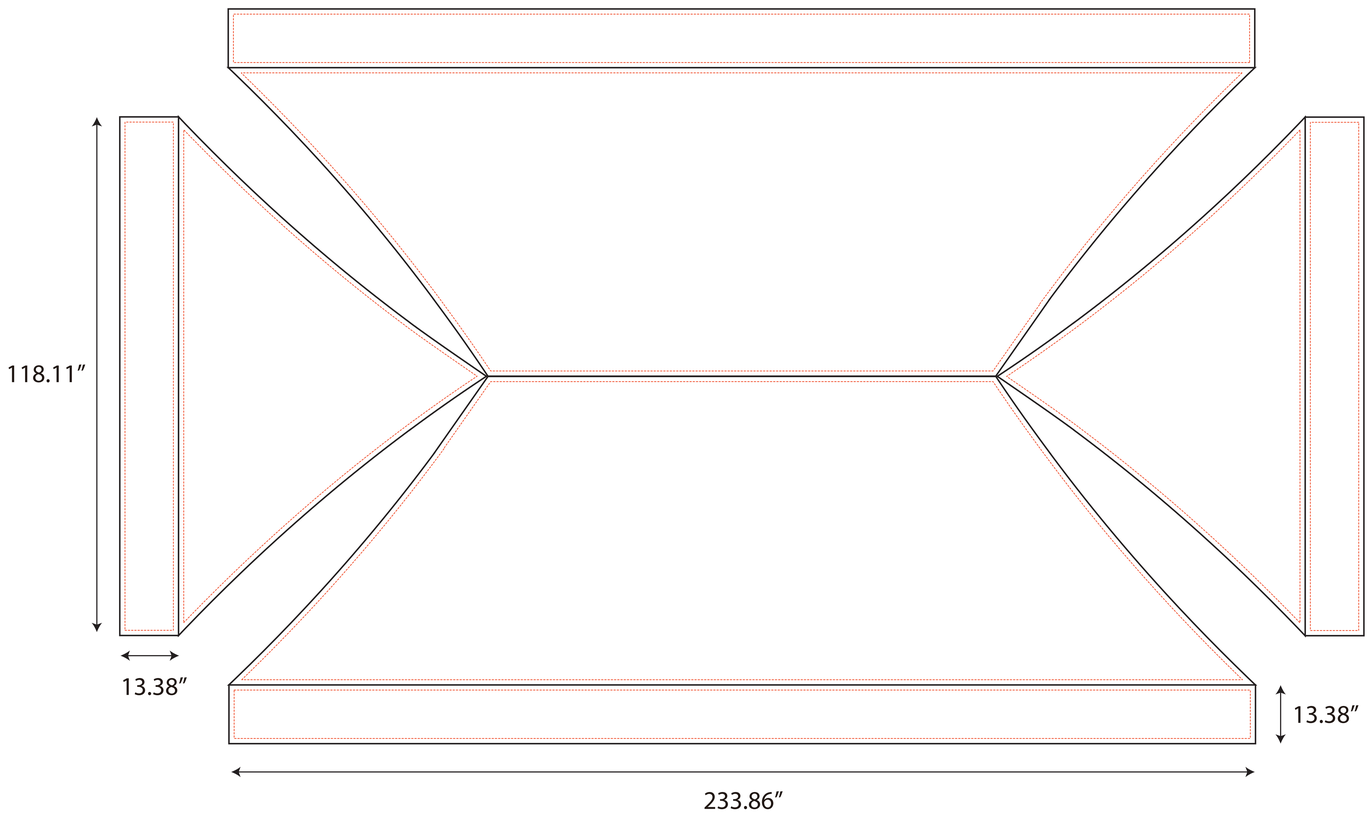

HALF SIDE WALL (RIGHT)

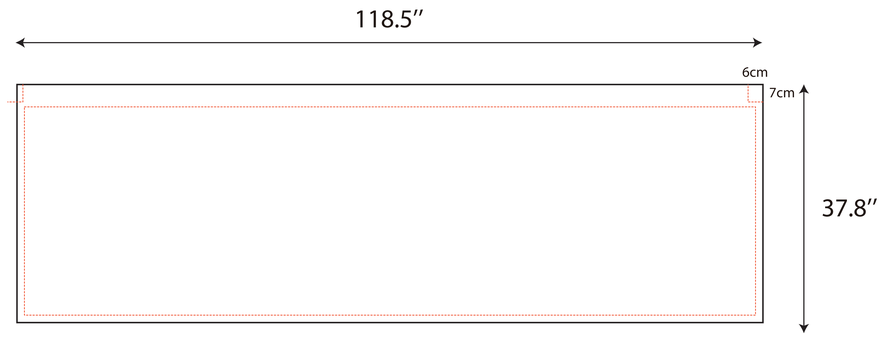

HALF SIDE WALL (LEFT)

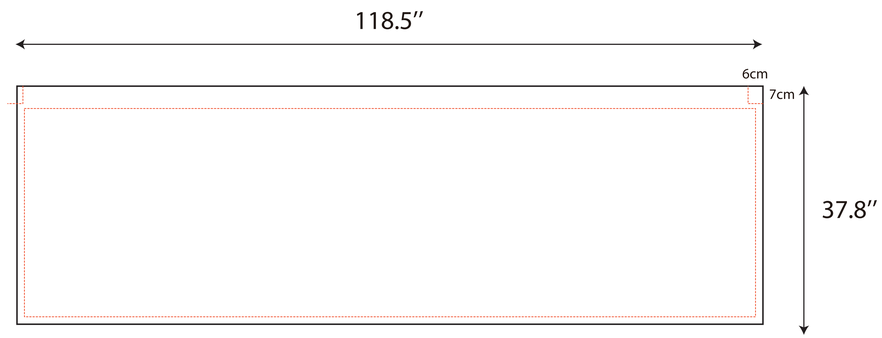

FULL FRONT WINDOW WALL

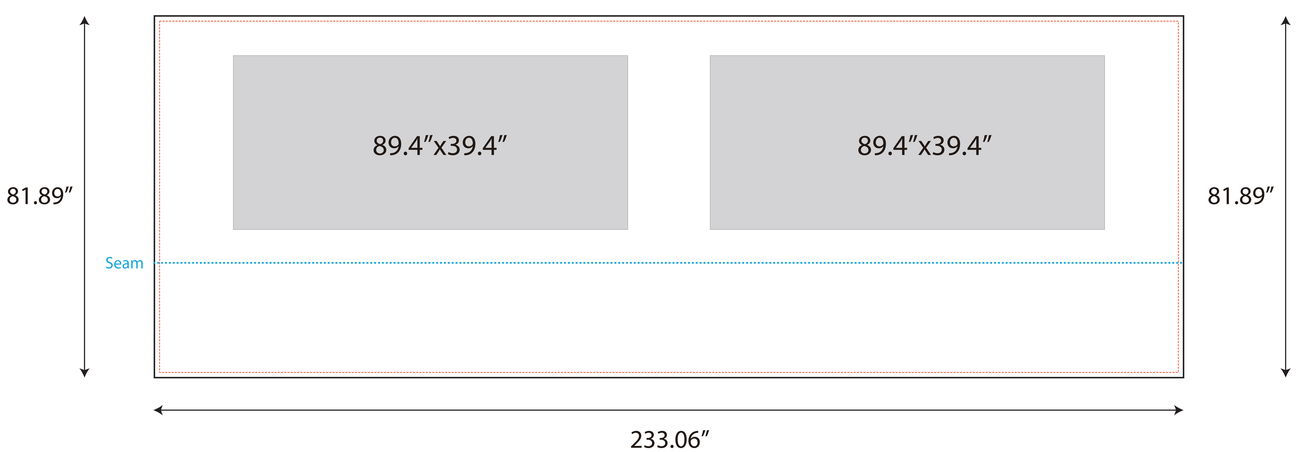
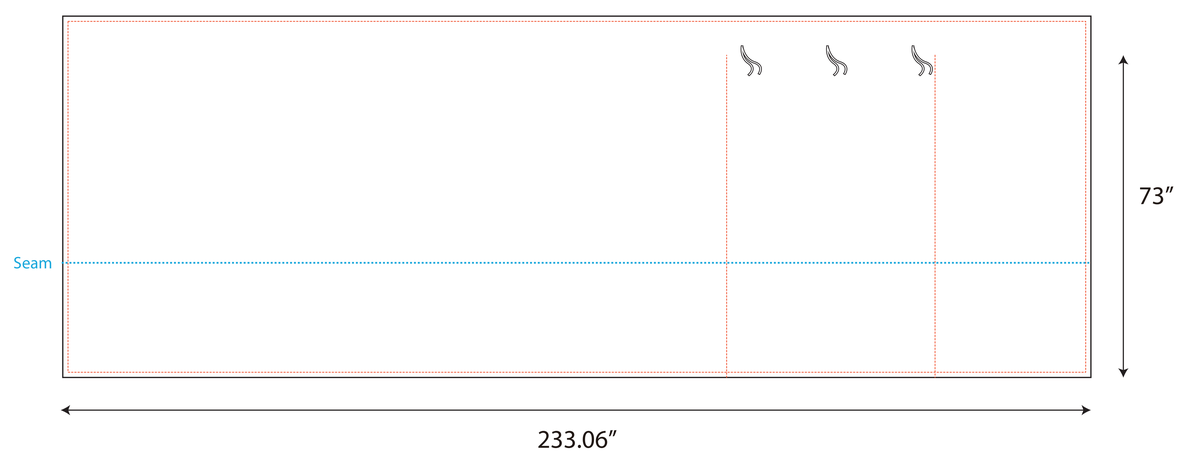
FULL BACK WALL DOOR