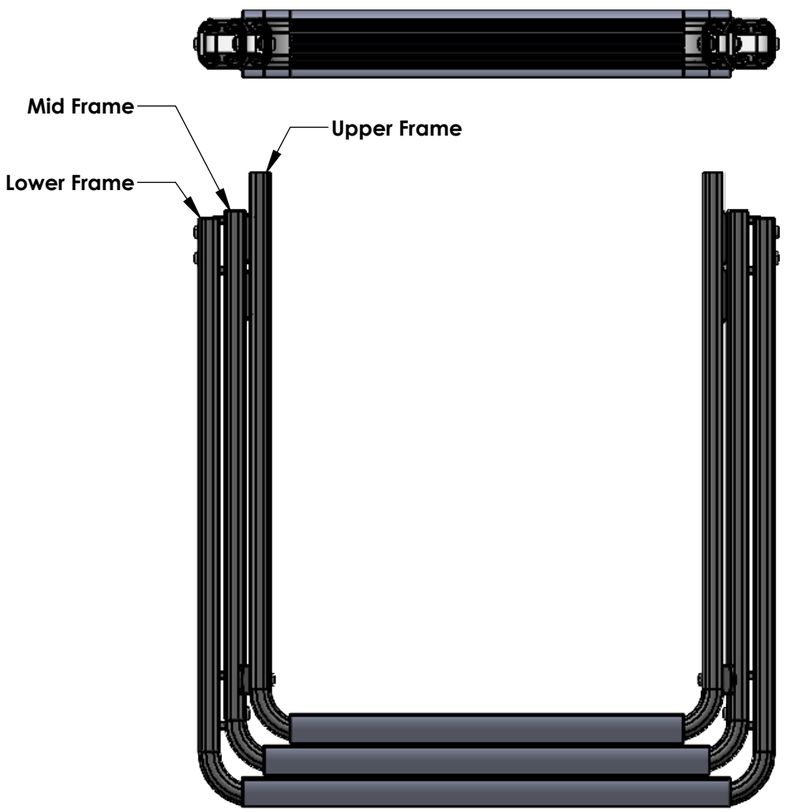

Repair Kit Parts:

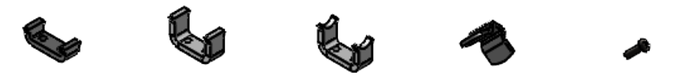

660-500	660-501	660-514	660-521	815-204-C
Low Block	High Block	Groove Block	Butterfly	1/4-20 x 3/8
4 pieces	2 pieces	2 pieces	2 pieces	18 pieces

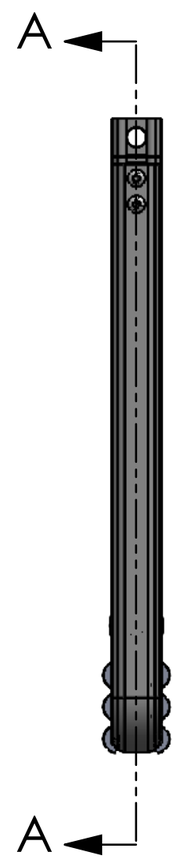

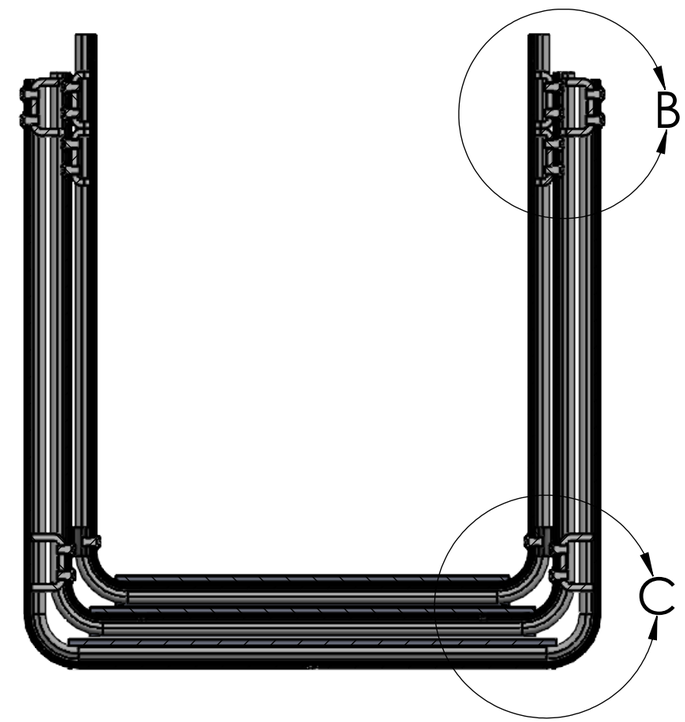

SECTION A-A

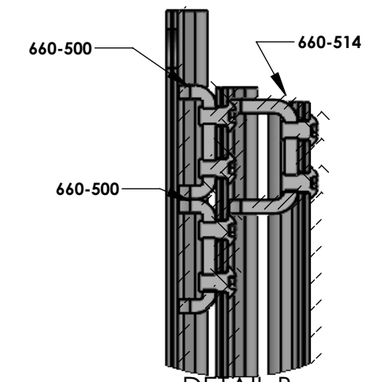

DETAIL B
SCALE 1 : 2

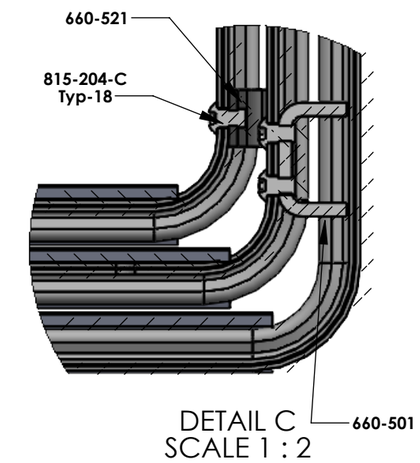

DETAIL C
SCALE 1 : 2

BASIC ASSEMBLY STEPS:

Note: Make sure all screws are tight & Loc-Tight should be used on screws.

1. **Attach 660-501 High Blocks in Groove of Mid Frame (1-each side)**
2. **Attach 660-521 Butterfly Blocks in Groove of Upper Frame (1-each side)**
3. **Place Mid Frame around Upper Frame and slide two 660-500 Low Blocks in Groove of the Upper Frame & fasten to Mid Frame. (2-each side)**
4. **Place Lower Frame around Mid Frame and slide 660-514 Groove Blocks into grooves as shown & fasten toLower Frame.**
5. **Assembly is now complete and can be attached to the Gudgeon.**

-REV-	DATE	REVISION CHANGE NOTES	BY	APPV

UNLESS OTHERWISE SPECIFIED:

DIMENSIONS ARE IN INCHES
TOLERANCES:
FRACTIONAL ± 1/64"
ANGULAR: MACH ±1/2 Deg. BEND ±1 Deg.
TWO PLACE DECIMAL ± .03"
THREE PLACE DECIMAL ± .015"

DO NOT SCALE THIS DRAWING

MATERIAL: Stainless Steel

FINISH: N/A

DATE:	**9-25-14**
DRAWN BY:	*Al Bender*
APPROVED BY:	
SCALE:	N/A

GG Schmitt & Sons

2821 Old Tree Drive
Lancaster, PA 17603
717-394-3701

7230 15th Street East
Sarasota, FL 34243
941-360-1967

PROPRIETARY AND CONFIDENTIAL

THE INFORMATION CONTAINED IN THIS DRAWING IS THE SOLE PROPERTY OF GG SCHMITT & SONS. ANY REPRODUCTION IN PART OR AS A WHOLE WITHOUT THE WRITTEN PERMISSION OF GG SCHMITT & SONS IS PROHIBITED.

GG Schmitt & Sons

TITLE: **Installation Guide for Block Kit L08E3105**

SIZE **B** DWG. NO. **L08E3105-BLK-I**

ORIG.NO. SAME

SHEET 1 OF 1