CHIKOUSA

CK-ZEM | STEEL SOLAR CARPORT | GAZEBO

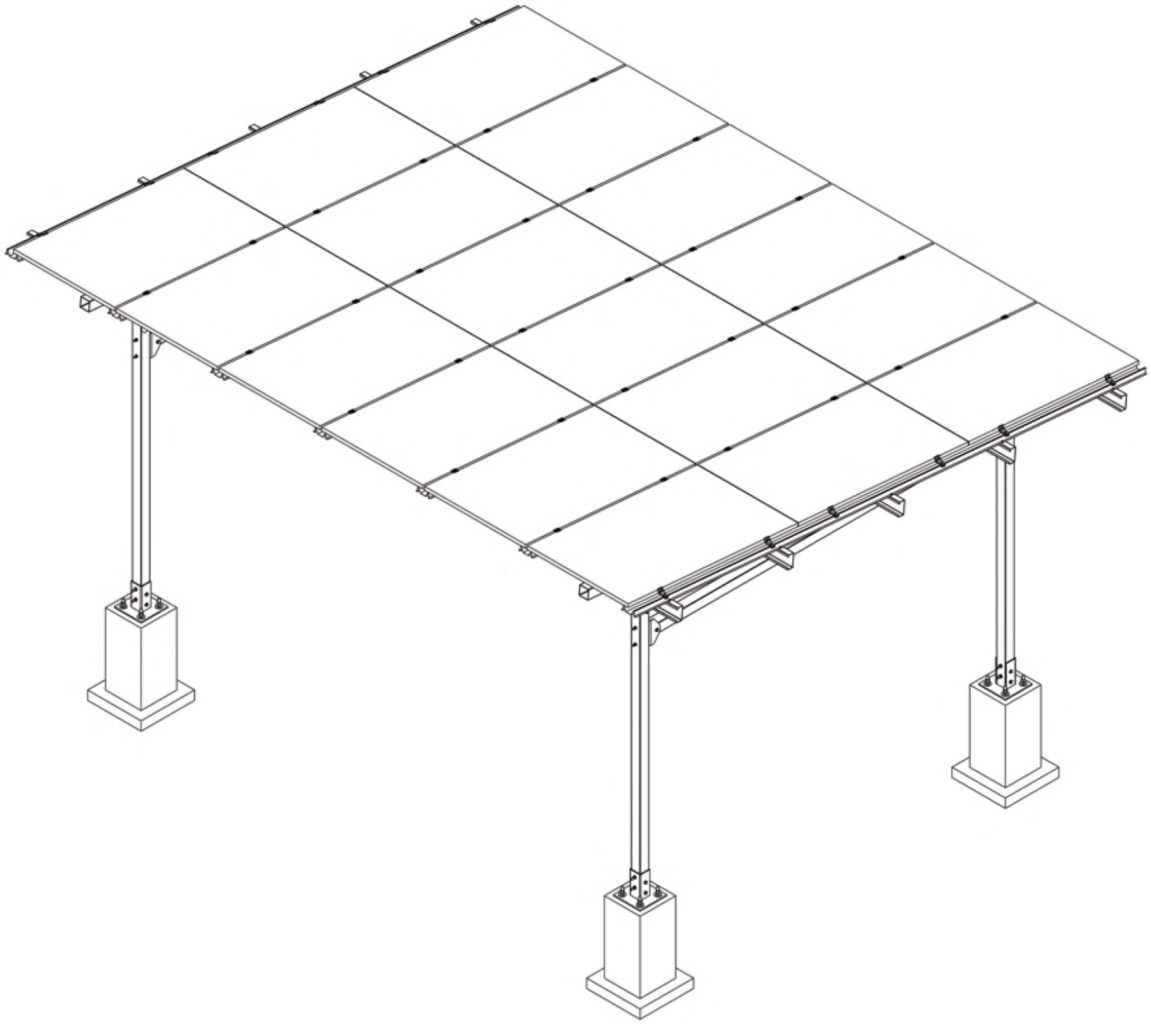

VERSION: 0623V01 | ENG

Always use the most recent version of the installation manual before installing your Carport/Gazebo. The installation Manual is subject to change without notice. Please consult with CHIKOUSA to ensure you are utilizing the latest Install Manual.

BRIEF DESCRIPTION

CK-ZEM Steel Solar Carport/Gazebo is a robust double carport that can accommodate 3 panels in portrait, 6 across, totaling 18 panels. This structure can be installed with a 2-3 person crew, without the Need of any heavy duty tools. The installation should always be completed by trained professionals and/or qualified individuals, who have been adequately instructed and trained about the tasks involved with the installation, including the usage of protective devices, protective measures, relevant provisions, accident prevention regulations, and local operating site conditions and have proven competence in all areas of the installation.

Please read carefully this installation manual and all other applicable documents before starting your installation. Please contact CHIKO with any questions that you may have.

MAINTENANCE

1. When signs of rust appear, or when the paint is peeled or removed, you must take steps to remove the rust and paint the affected areas.
2. You must check the bolts are secured once a year. Tighten according to torque specs.
3. If the columns of the structure are hit, you must replace the columns of the structure immediately.

WARNING

If any structural component of the system to include the column, beam, base plate, or rail are damaged they must be replaced immediately.

REQUIRED TOOLS

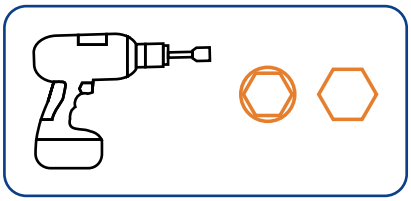

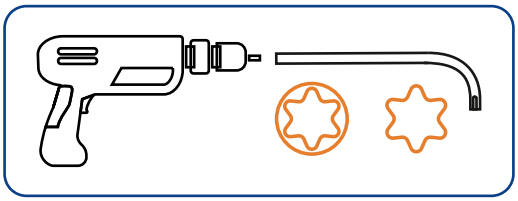

HARDHAT

SAFETY GLASSES

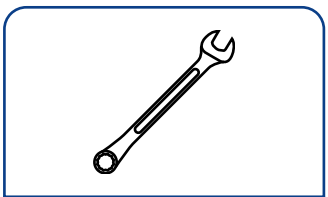

WRENCH

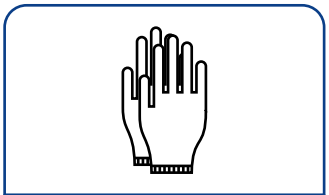

GLOVES

INK FOUNTAIN

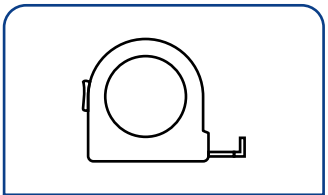

TAPE MEASURE

MAIN COMPONENTS

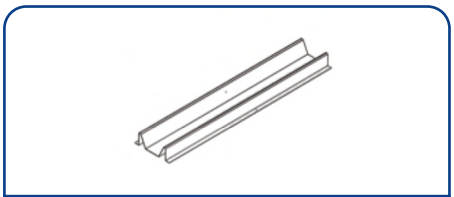

M RAIL

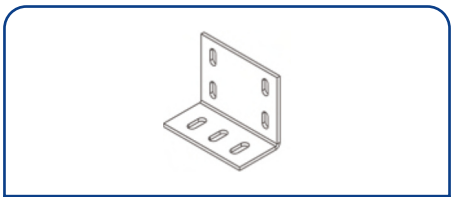

PURLIN FIXED KIT

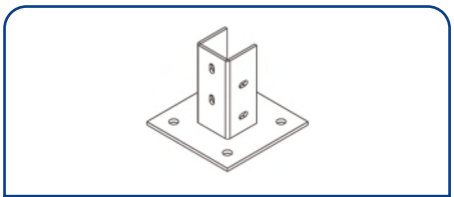

BASE PLATE

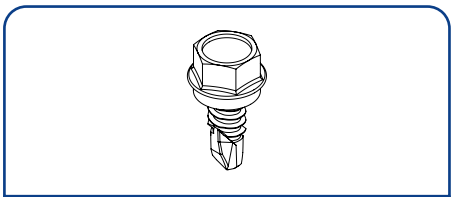

SELF-TAPING SCREW

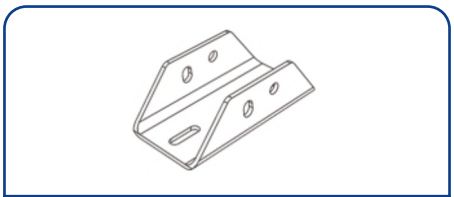

BEAM ADAPTER

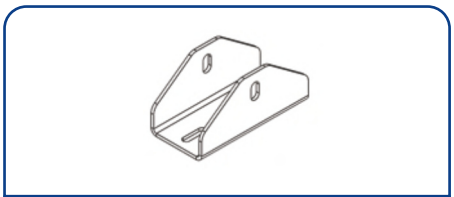

STRENGTH ADAPTER

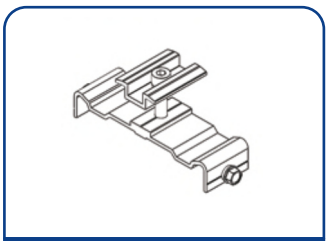

MID-CLAMP

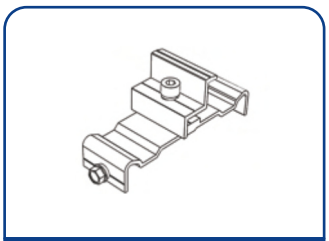

END-CLAMP

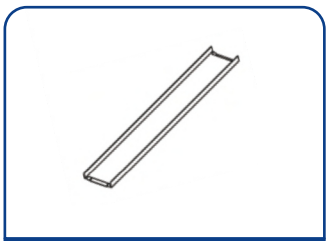

WATER CHANNEL

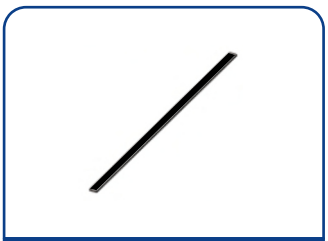

WATER-PROOF RUBBER

NOTE

Customer needs to source materials for footings based on structural engineer specifications.

MAIN COMPONENTS

Overview/Diagram

The following is a diagram that list the mian components of the CK-ZEM Carport SYstem

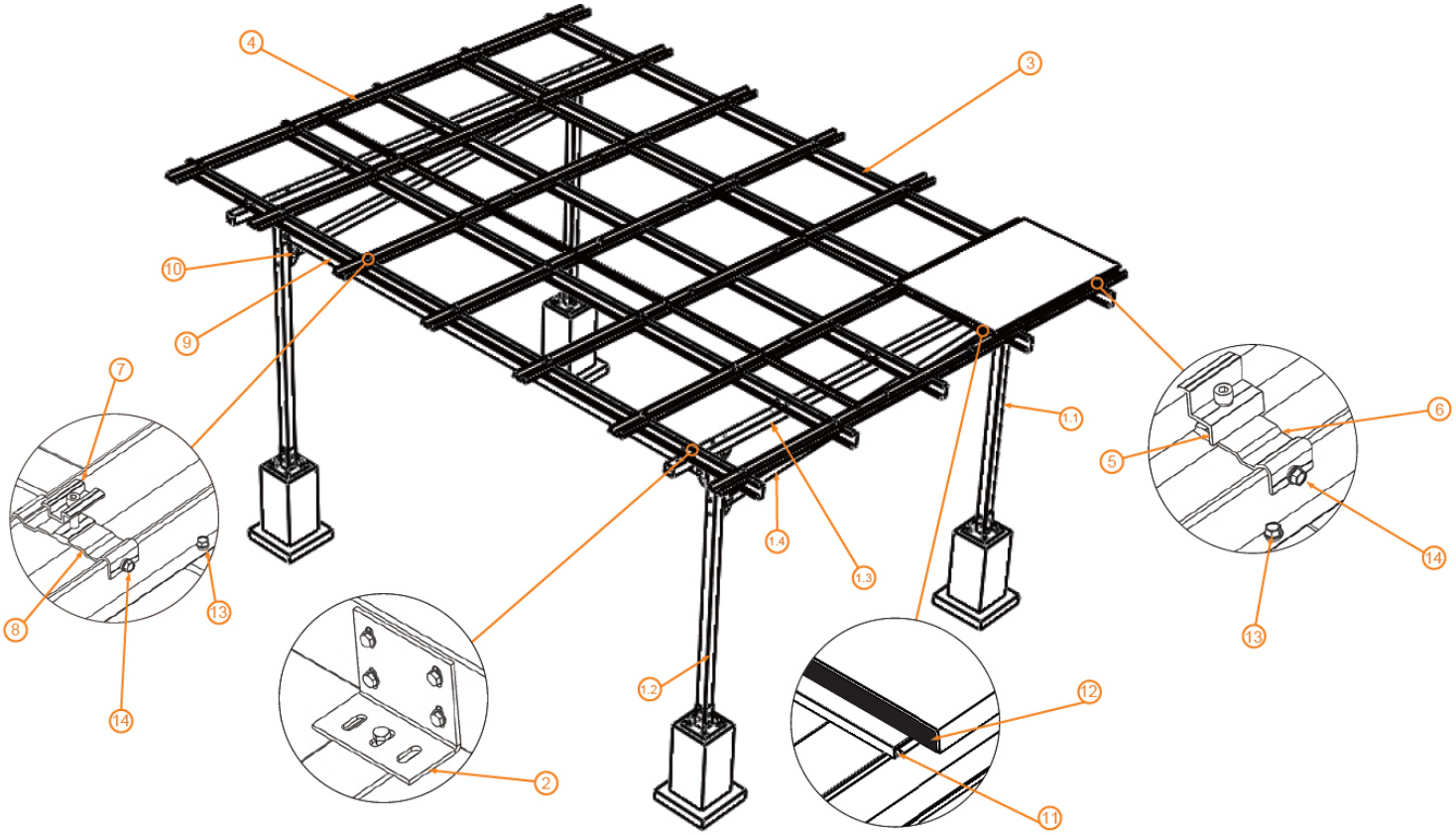

CAT	No	Description	QTY
1	1	Support Rack	1
1	1.1	Front Column	2
1	1.2	Rear Column	2
1	1.3	Support Beam	2
1	1.4	Legs Strengther Beam	1
4	2	C Rail Fix Kit	10
4	3	C Rail - 7300	5
2	4	M Rail - 5760	7
5	5	End Clamp	12

CAT	No	Description	QTY
5	6	End Clamp share plate	12
5	7	Mid Clamp	30
5	8	Mid Clamp share plate	30
1	9	Column Bracing-5410	1
1	10	Column Bracing Fix Kit	2
3	11	Water Channel-1061	12
3	12	Waterproof Rubber-1133	12
2	13	M6.3*25	70
2	14	M6.3*16	42

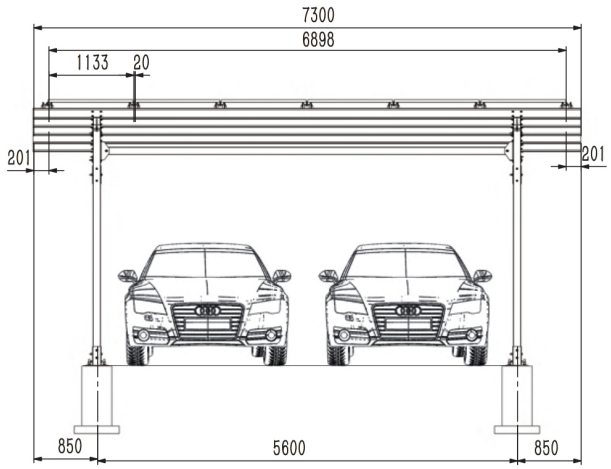

FRONT VIEW

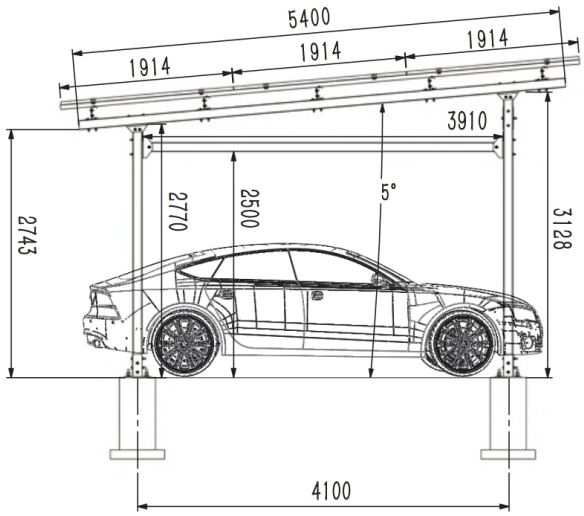

LEFT VIEW

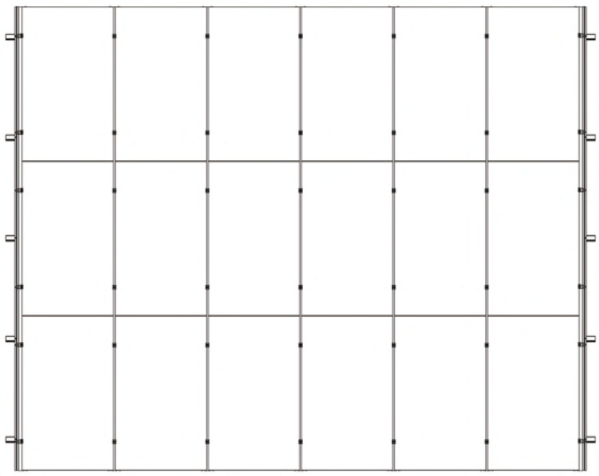

TOP VIEW

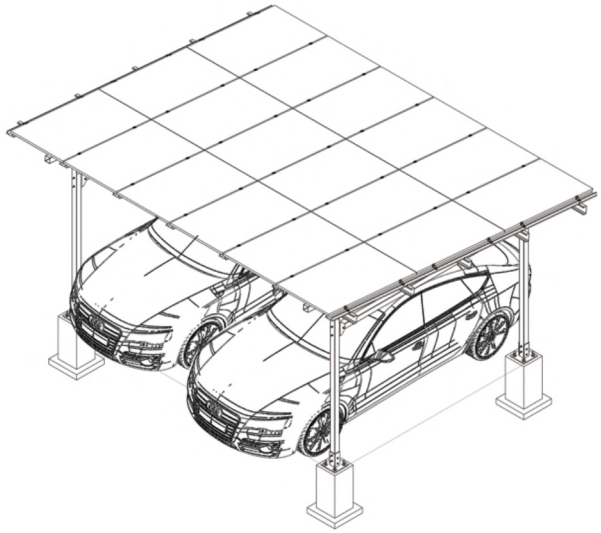

COMPONENTS LIST

SECT.	CAT	Picture	Description PART#		Details	QTY
1, 2,3, 4,5	1	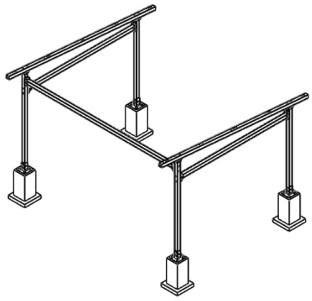	Carport Support Structure CK-ZEM-CP3-5 COLUMNS CK-001-016-014 BEAMS CK-GT-001-016-014 Base 'Plate'CK-GT-001-016-805 Column/Beam Adapters Beam CK-GT-001-016-014 Column CK-001-016-014	1.1	Front Columns	2
				1.2	Rear Columns	2
				1.3	Base Plate	4
				1.4	Beam	2
				1.5	Beam Adapter	4
				1.6	Strengthen Beam 1	2
				1.7	Strengthen Beam 2	1
				1.8	Strengthen Adapter	6
				1.9	HDG Bolt M12*140	20
				1.10	HDG Bolt M14*155	30
				1.11	HDG Nut M12	20
				1.12	HDG Nut M14	30
				1.13	HDG Washer M12	40
				1.14	HDG Washer M14	58
				1.15	HDG Spring Washer M12	20
				1.16	HDG Spring Washer M14	30
8	2		M Rail CK-ZEM-010-5760	2.1	M Water-proof Rail	6
				2.2	Self Taping Screw	60
9	3		Water Channel CK-ZEM-009-1062	3	Water Channel	10
9	3		Water Proof Strip CK-IP-160-1133	3	Water Proof Rubber	10
6	4	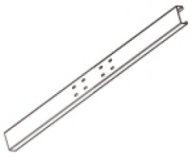	Purlin 'C' Channel CK-PL-C140-001-016-811-600 0	4	Purlin C CHANNEL	5

SECT	CAT	Picture	Description Part#		Details	QTY
6	4	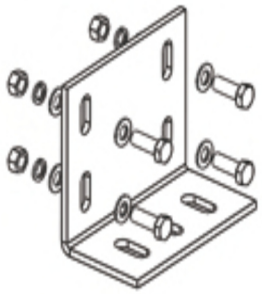	C RAIL Purlin Fix Kit CK-PL- GT001-016-14	4.1	Purlin Fix Kit	10
				4.2	HDG Bolt M10*40	40
				4.3	HDG Bolt M12*140	20
				4.4	HDG Nut M10	40
				4.5	HDG Nut M12	20
				4.6	HDG Washer M10	80
				4.7	HDG Washer M12	40
				4.8	HDG Spring Washer M10	40
				4.9	HDG Spring Washer M12	20
8, 9	5	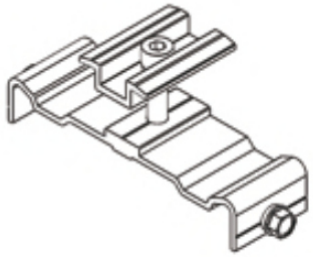	Mid Clamp CK-782-4-60-Q BRACKET # #CK-A845-801	5.1	35mm Mid Clamp	24
				5.2	845 Share Plate	24
				5.3	M Grounding Plate	24
				5.4	Self Taping Screw	48
				5.5	SS304 Bolt M8*45	24
				5.6	SS304 Spring Washer M8	24
8, 9	5	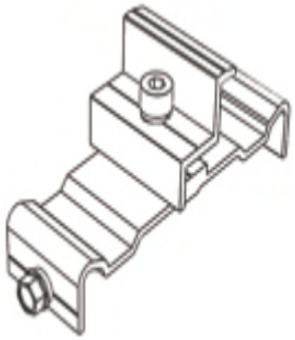	End Clamp CK-737-3-60-Q BRACKET # #CK-A845-801	5.7	35mm End Clamp	12
				5.8	845 Share Plate	12
				5.9	M Grounding Plate	12
				5.10	Self Taping Screw	24
				5.11	SS304 Bolt M8*45	12
				5.12	SS304 Spring Washer M8	12
10	6	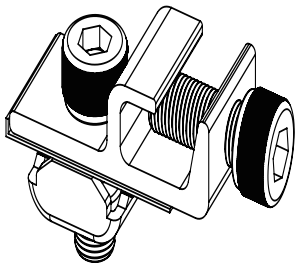	Grounding Lug CK-GTC-R2	6.1	Grounding lug - weeb lug 8.0	1
				6.2	SS304 outer hex bolt 1/4" *0.6”	1
				6.3	SS304 inner hex bolt M8*20	1
				6.4	SS304 inner hex bolt M8*20	1

INSTALLATION STEPS

1. Build Base

Solution A, Build base

- Mark footer location according to the diagram. Verify all angles are square.
- Dig footers and make base with anchor bolts according to site conditions and system specifications and based on your structural engineer instructions for foundations requirements.
- If the ground is unlevel, ensure that all footer placements are level and at the same height regardless of the terrain elevation. Never install the structure tilted, the columns must always be straight.
- The structure's foundations should be calculated taking into account site conditions, soil type, seismic conditions, maximum wind and snow loads for the site location and the product mechanical loading specifications. In some cases, a geotechnical study is required. Please consult with your local structural engineer.
- In areas subject to freezing, footer depths may have to increase to resist freeze heave. Always consult a structural engineer to confirm footer depth and dimension.

Solution B, Concrete anchors

- Concrete anchors can be utilized if approved by a structural engineer.

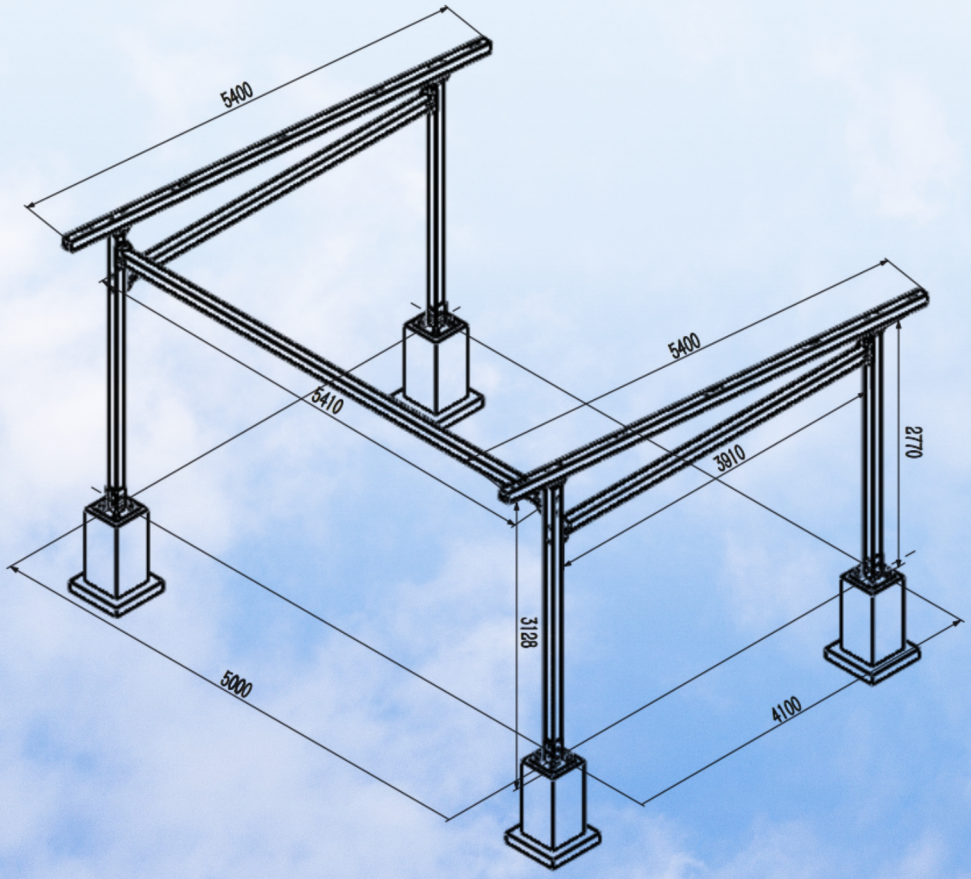

2. Install Base Plates

- Slide the column base plate over the concrete anchors and secure them. If you are using leveling nuts to level the column base plate. Correct any shifting if needed and repeat for the other three column base plates. Fill the gap between the base plate and the footing with Dry-pack non-shrink grout.
- Tip: The distance between the front and rear column conform with drawing.

Products Name	Quantity
Base	4
M12 Nut Kits (1 flat washer + 1 spring washer + 1 nut)	4

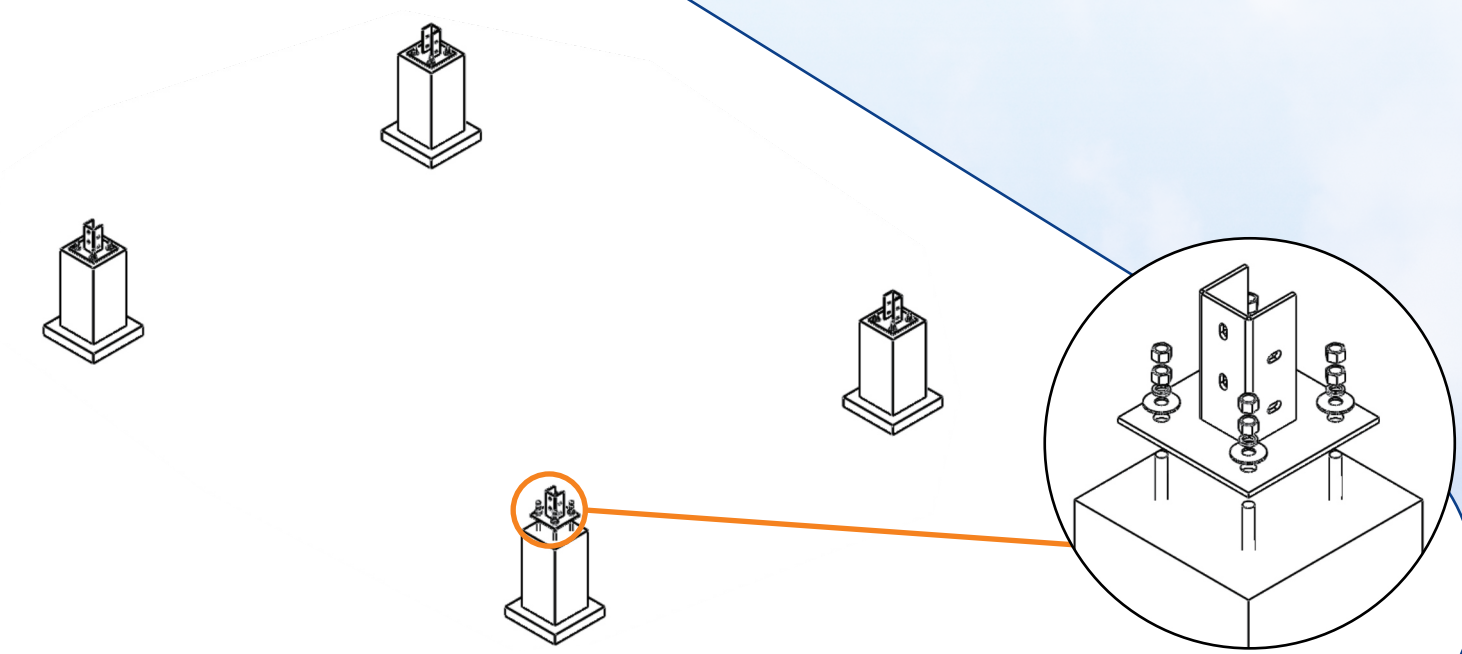

3. Fix Adapter

- A . Fix strengthen adapters on front & rear columns
- B1. Fix beam adapters on main beam - 5400mm
- B2. Fix purlin fix kit to main beam - 5400mm

Products Name	Quantity
Strengthen Adapter	6
M12*140mm Bolt Kits (1 big flat washer + 1spring washer + 1 nut)	30
Beam Adapter	4
Purlin Fix Kit	10

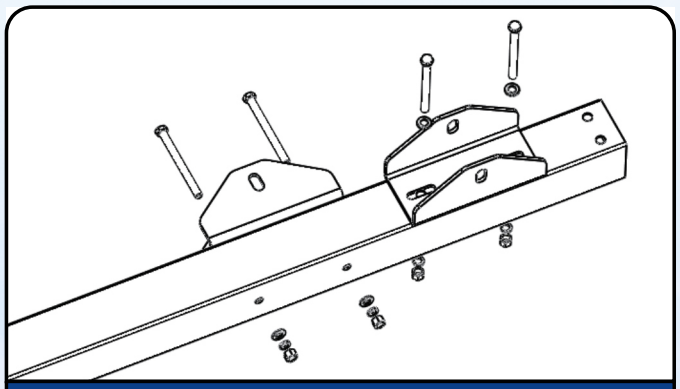

A

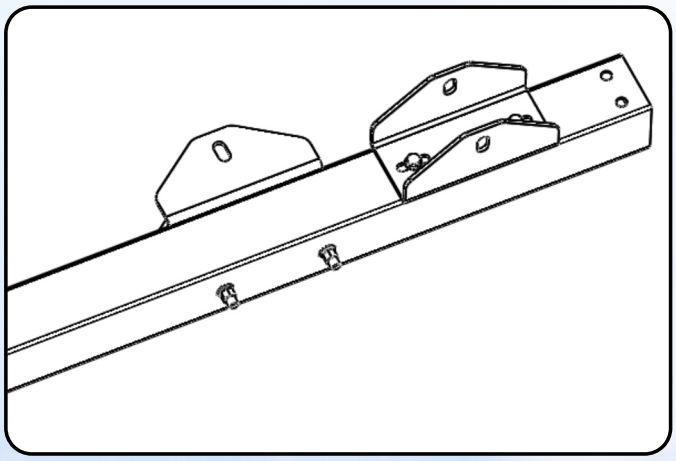

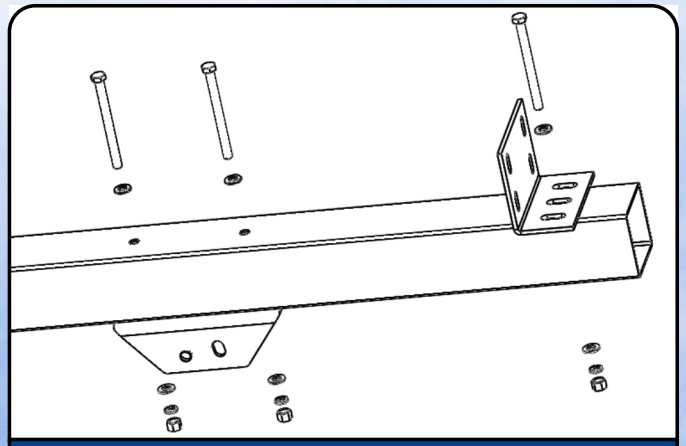

B1 & B2

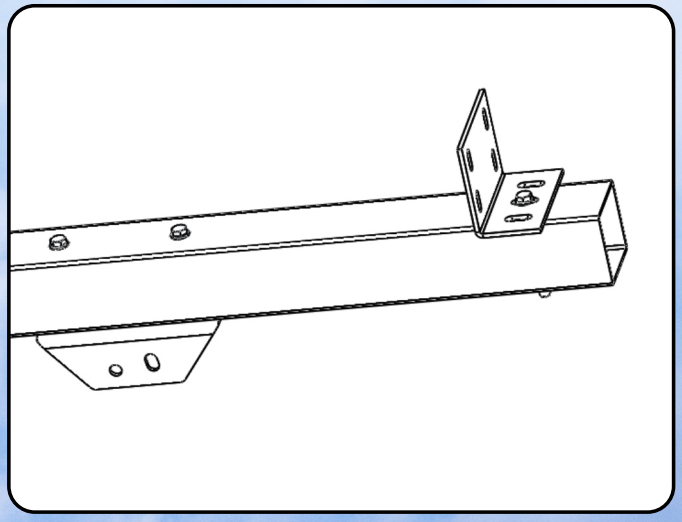

4. Connect Columns

✓ Attach Columns to base plate-if concrete anchors, use corresponding Anchor Bolts

Products Name	Quantity
Front Columns --- 2770mm	2
Rear Clolumns --- 3128mm	2
M10*120mm Bolt Kits (1 flat washer + 1 spring washer + 1 nut)	16

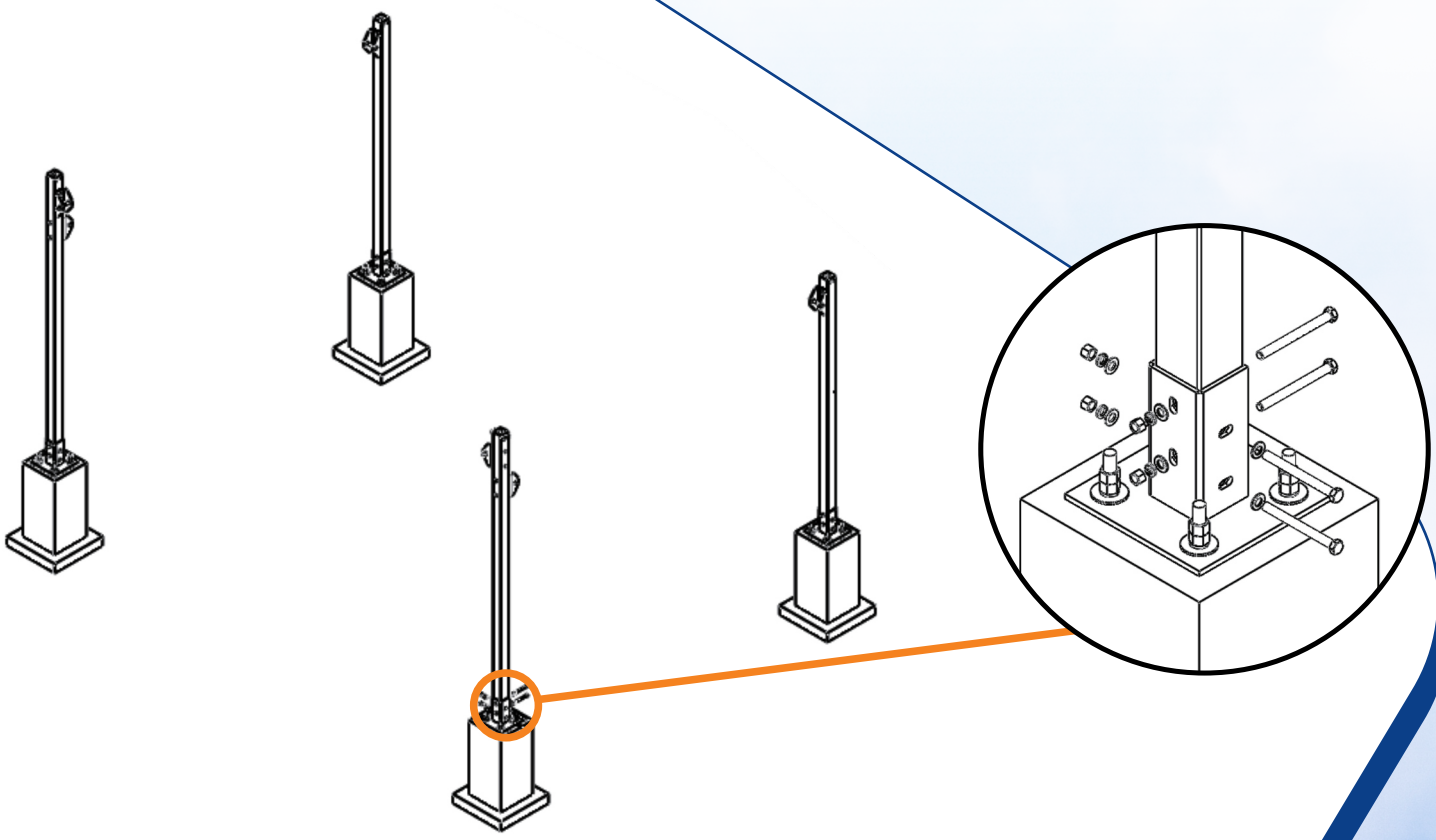

5. Connect Beams

- Connect beam 3910mm between front and rear columns
- Connect beam 5410mm between 2 rear columns
- Connect main beam 5400 mm between front and rear columns on top

Products Name	Quantity
Main Beam --- 5400mm	2
Beam ---- 3910mm	2
Beam ---- 5410mm	1
M12*140mm Bolt Kits (1 flat washer + 1 spring washer + 1 nut)	20

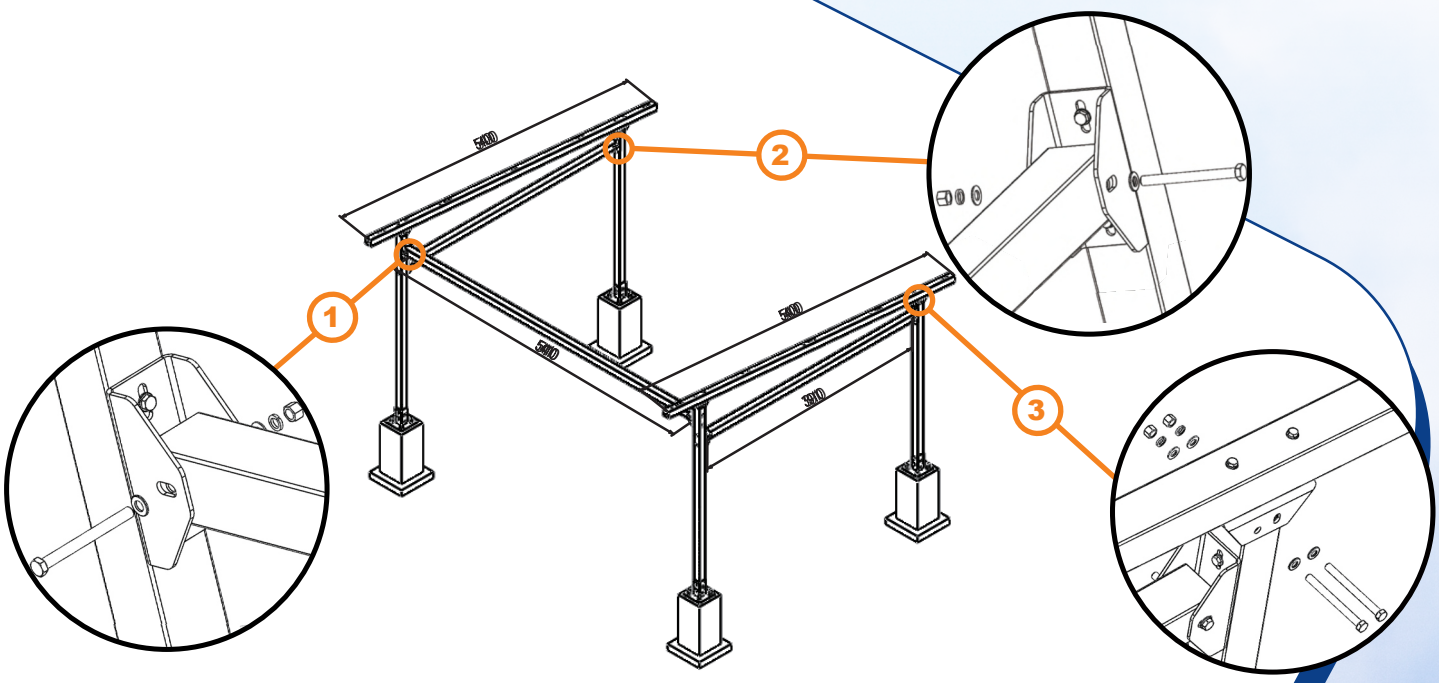

6. Fix C Rail

- Use purlin fix kit to connect C rail 5745mm to main beam 5400mm
- Use M10*40mm Bolt Kits (1 flat washer + 1 spring washer + 1 nut) Connect to C Rail
- Use M12*140mm Bolt Kits (1 flat washer + 1 spring washer + 1 nut) Connect to main beam

Products Name	Quantity
C Rail --- 5745mm	5
L Fix kit --	10
M10*40mm Bolt Kits (1 flat washer + 1 spring washer + 1 nut)	20
M12*140mm Bolt Kits (1 flat washer + 1 spring washer + 1 nut)	10

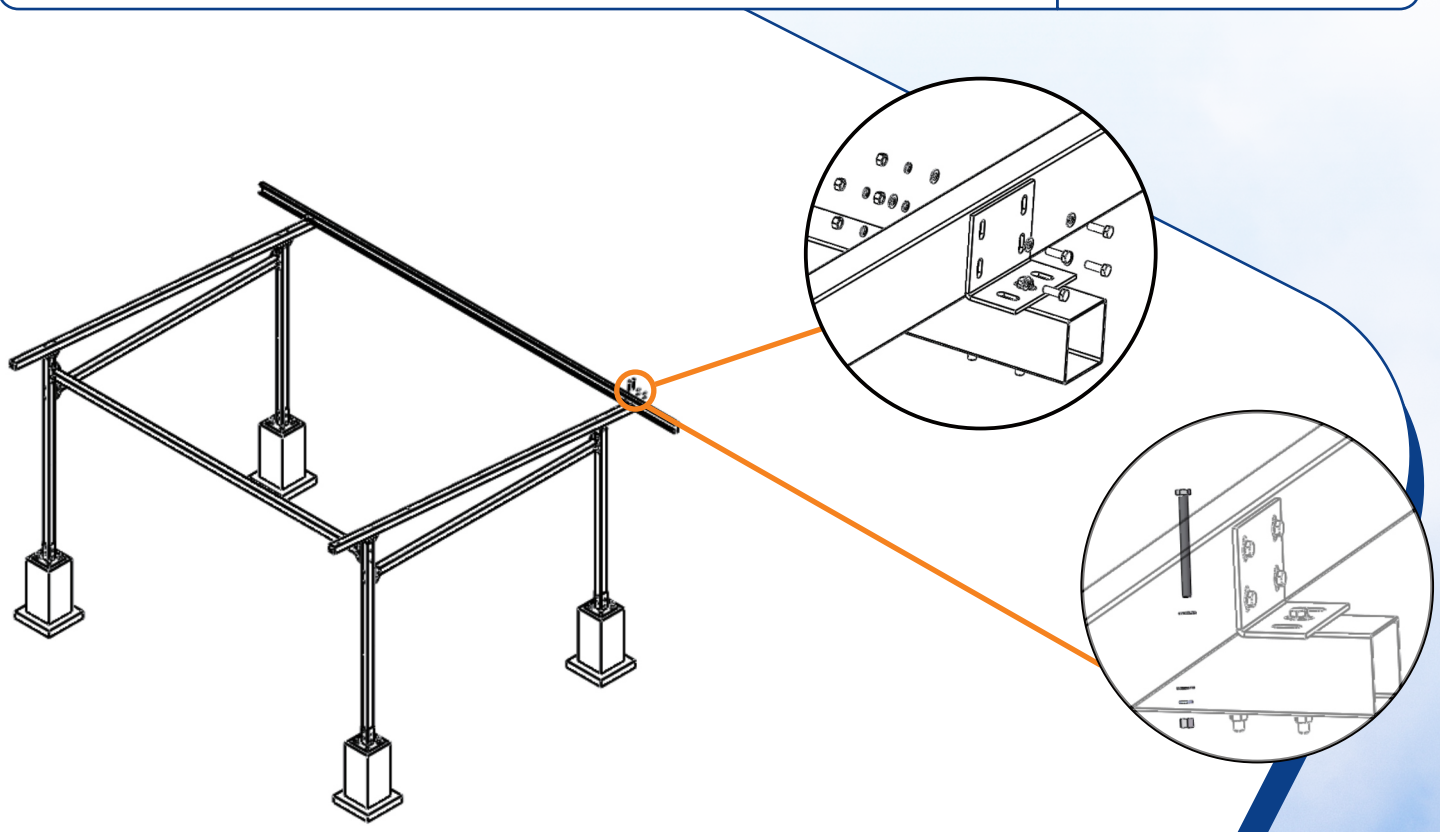

7. Pre-assemble clamps on M Rail

- ✓ Pre-fix share plate to M rail
- ✓ Connect mid clamps to share plate
- ✓ Please check L1/L2/L3/L4 before fixing

TIP: Place 2 M-Rails in parallel on a flat level surface, then lay 3 panels in portrait on top of The M-Rails, ensuring proper spacing, then mark your share plate locations. Use these Measurements to install the remaining share plates on the remaining M-Rails.

For Mid Clamp and End Clam Installation: M8 Torque: 15~20N.m

Products Name	Quantity
M Rails—5760mm	6
Share Plates	36
Mid Clamps	24
End Clamps	12
M6.3*16	72

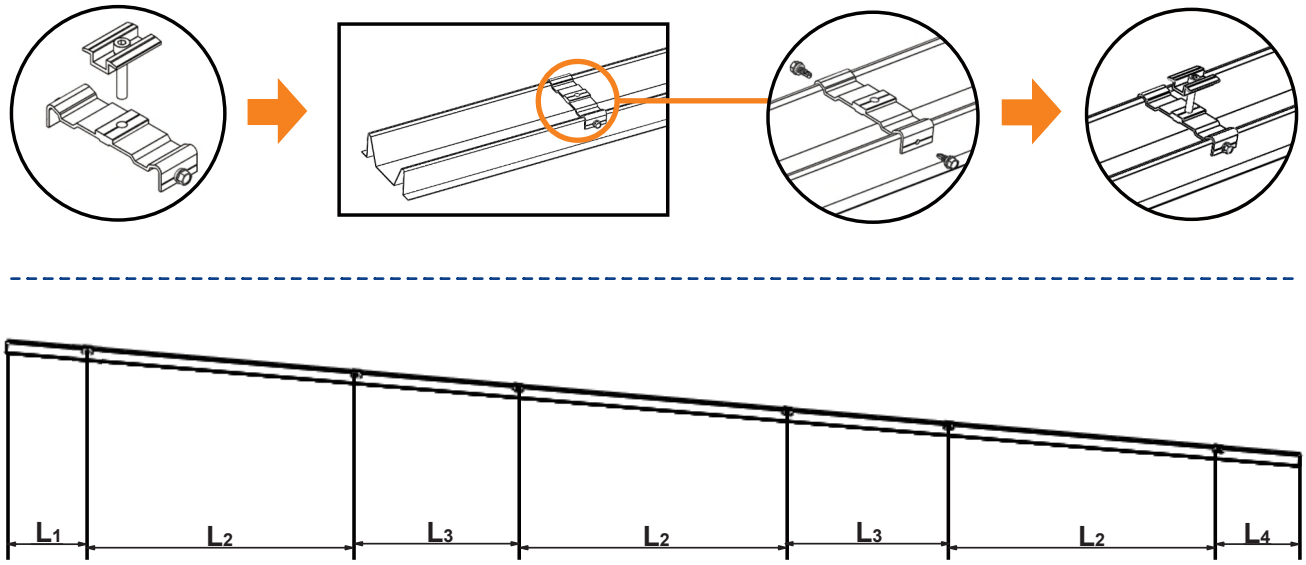

8. Fix M Rail

- Use M6.3*25 self tapping screw to fix M rail to C Rail
- With end clamps on the side M Rails
- With mid clamps on the inner M Rails
- Please check the L measurement before attaching

TIP: This is a critical step; if possible lay 7qty M-Rails down on flat level surface; place 6 panels across these M-Rails in Portrait configuration, ensure rails and panels are square; take measurement to confirm your starting M-Rail attachment location.

Products Name	Quantity
M Rails	6
M6.3*16	72

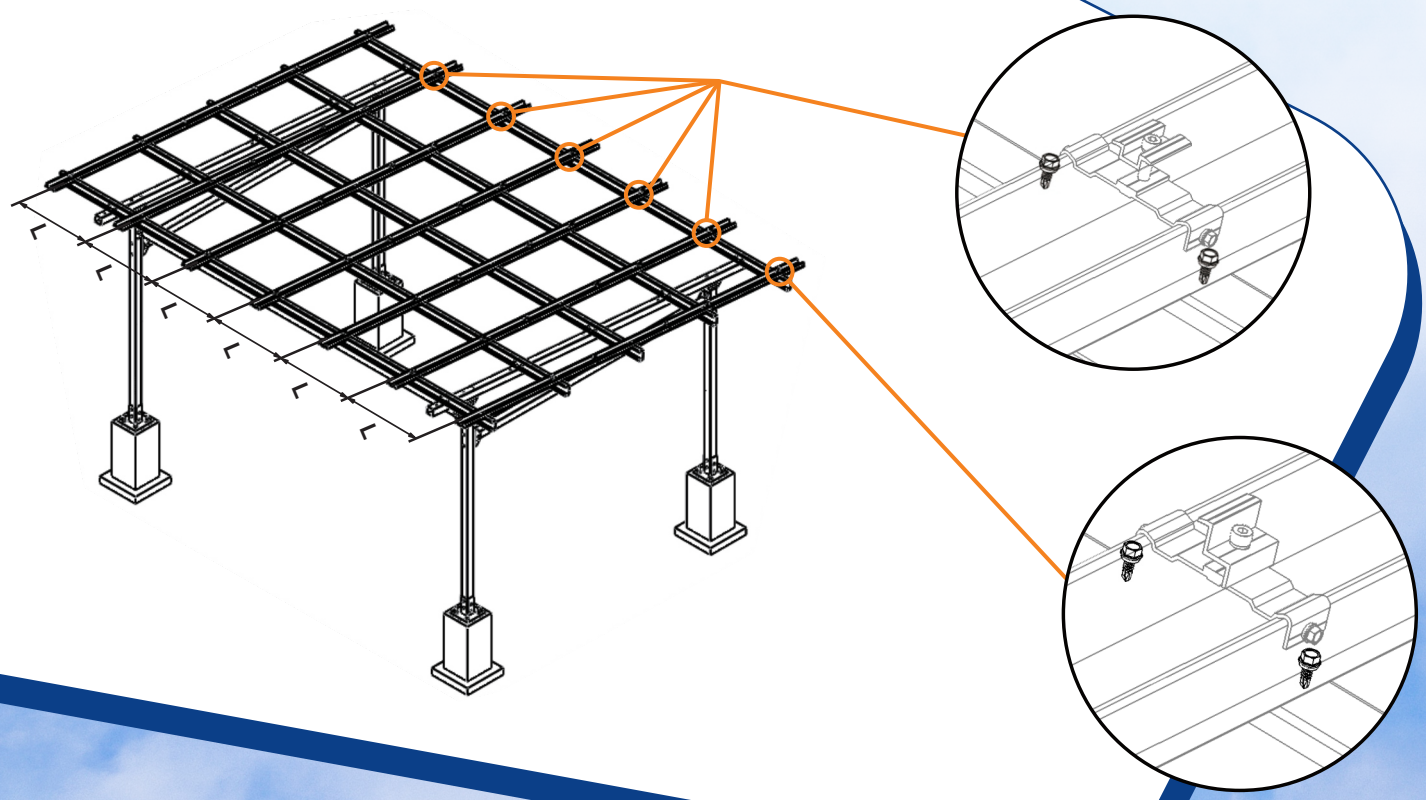

9. Install Solar Panels

- For waterproofing stick rubber molding to exterior of module frame but only where the frames are adjacent to other module frames or on all interior seams
- Install water channel (1061mm) where 2 panels meet under the module frame

Products Name	Quantity
Modules	18
Rubber	12
Water channel -- 1061	12

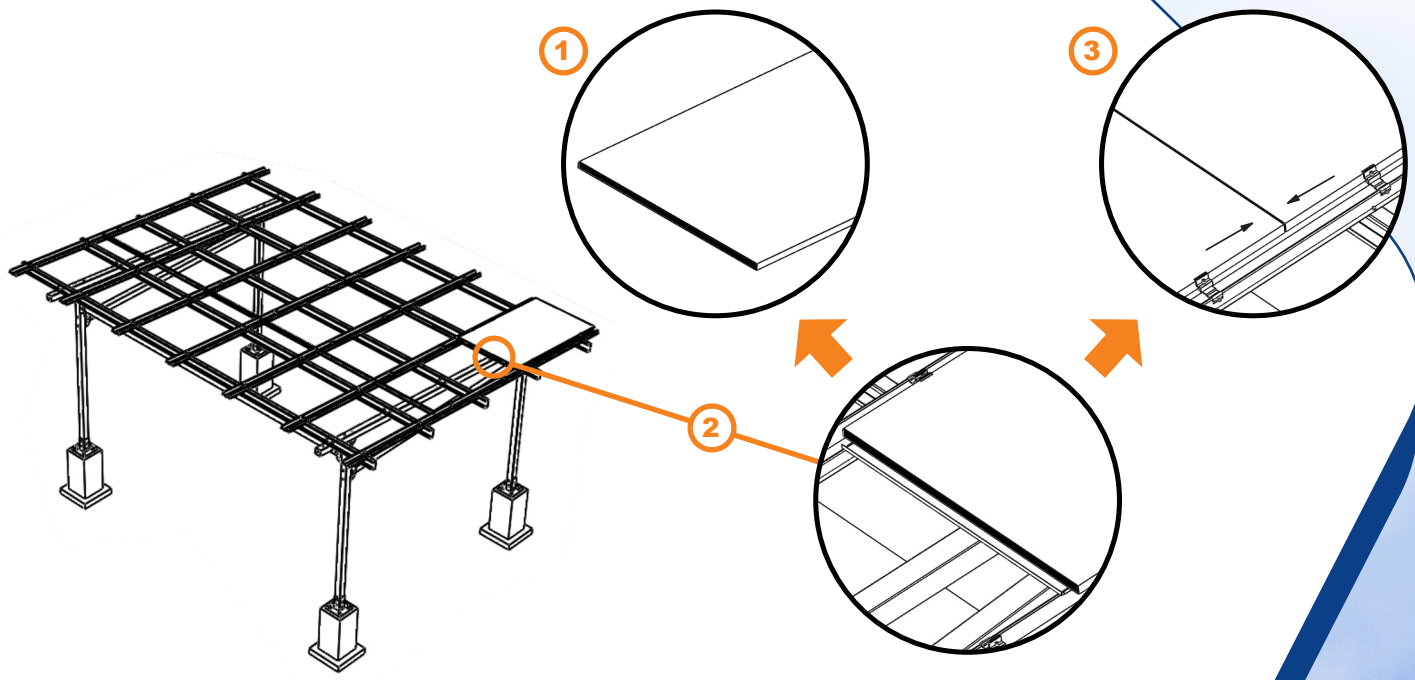

10. Grounding- Lug and Wiring

MID Clamp attached to every module provide module to module bonding.(END at either end of row). Install grounding lug at end of C-Rail in pre-drilled hole, ensure that all paint and any debris is removed from bonding site to achieve bonding connection. Attach the ground lug with a stainless steel, nut then cross 8.4mm2 or greater than or equal to 8AWG copper wire through all 5 grounding lugs (fixed by M8*20 inner hex bolt), finally connect copper wire to the ground. The grounding lug completes a grounding function when fastened tight to connect all 5 C Rails and copper wire. Then run copper wire, attached to the column, and down into the ground, attaching to ground rod or other ground.

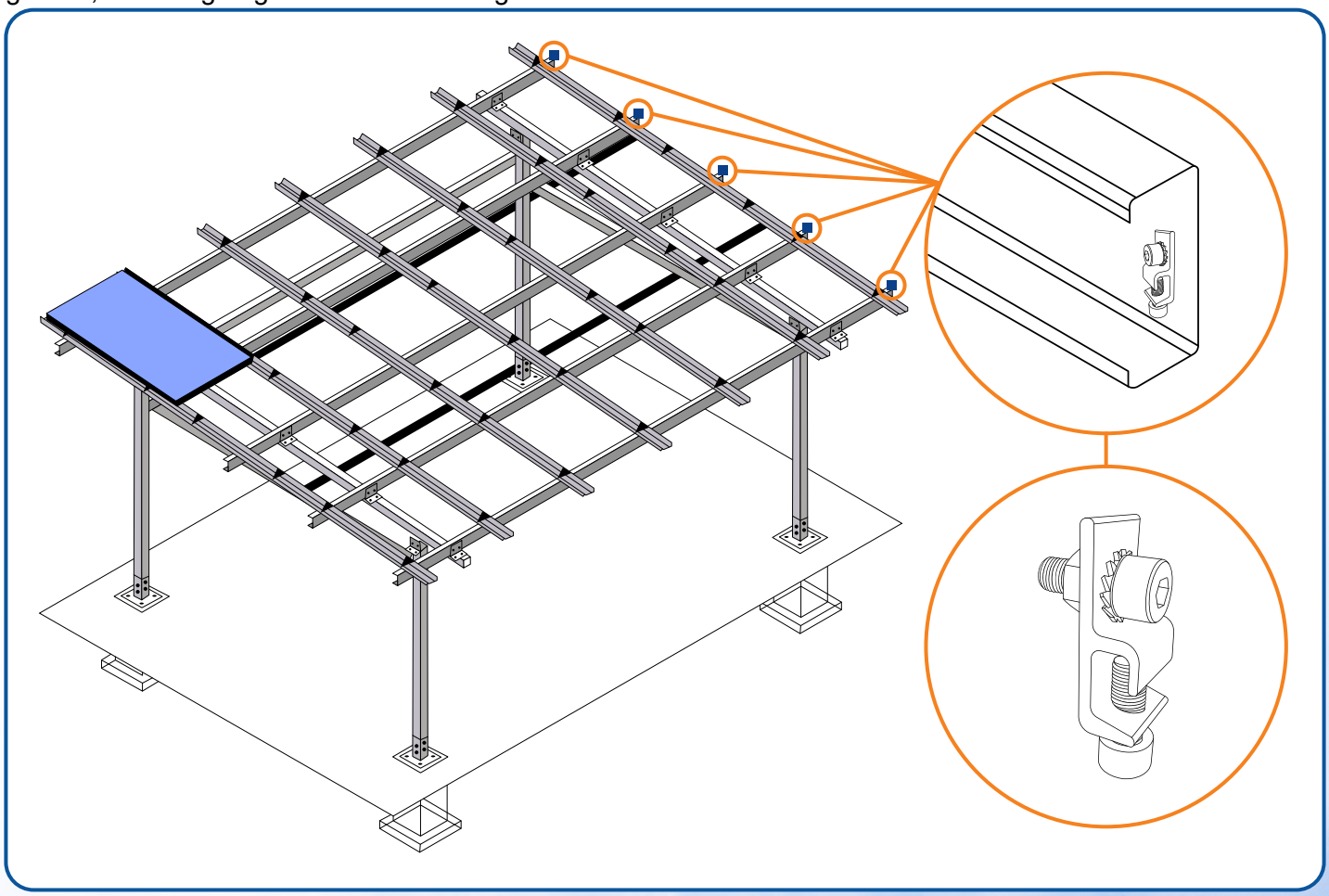

Electrical Characteristics of AWG Copper Wire

AWG	Diameter [inches]	Diameter [mm]	Resistance [Ohm / 1000ft.]	Resistance [Ohm / km]	Max Current [Amperes]	Max Frequency for 100% skin depth
6	0.162	4.1148	0.3951	1.295928	37	1100 Hz
7	0.1443	3.66522	0.4982	1.634096	30	1300 Hz
8	0.1285	3.2639	0.6282	2.060496	24	1650 Hz
9	0.1144	2.90576	0.7921	2.598088	19	2050 Hz
10	0.1019	2.58826	0.9989	3.276392	15	2600 Hz

Grounding – Lug and Wiring Diagram

MID Clamp attached to every module provide module to module bonding

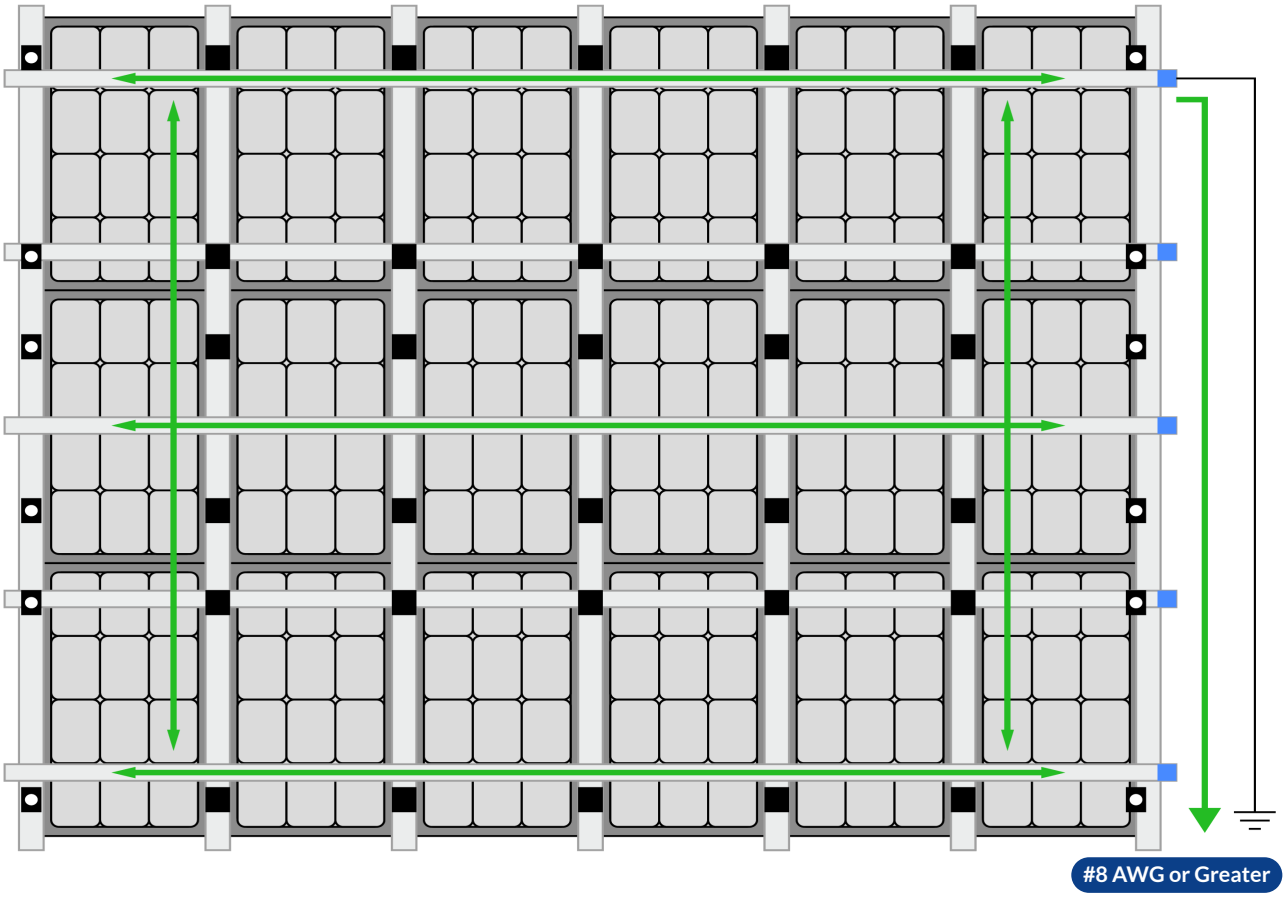

Grounded End Clamp | Grounded Mid Clamp | Ground Path | Grounding Lug

11. Final Check

- Check all bolts are fastened, all components are in right position
- Check and adjust the entire structure

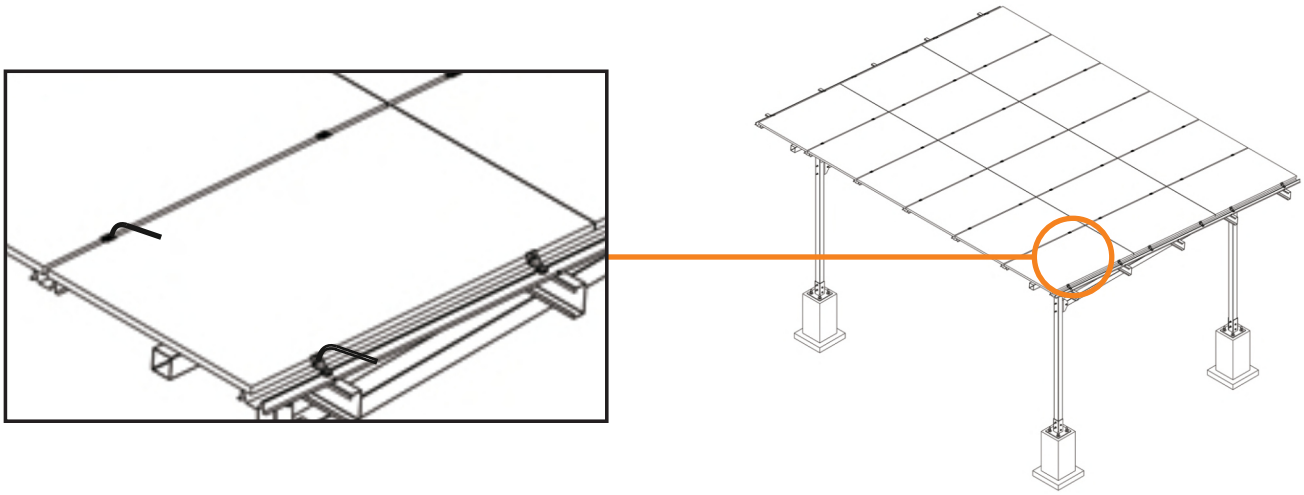

12. Hide Footing (Optional- not applicable if Concrete Anchor)

- Cement cladding for 4 bases,Cladding Size: 300mm*300mm*300mm.
  Cement grade: not less than C30.

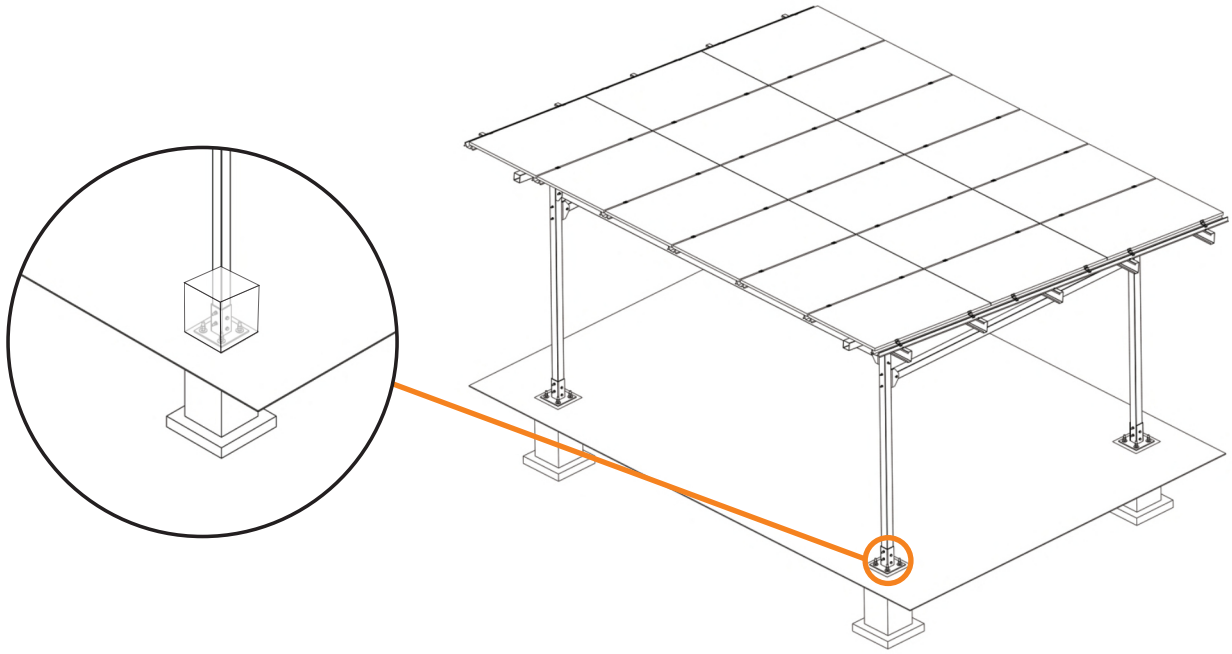

WORLD LEADING

M A N U F A C T U R E

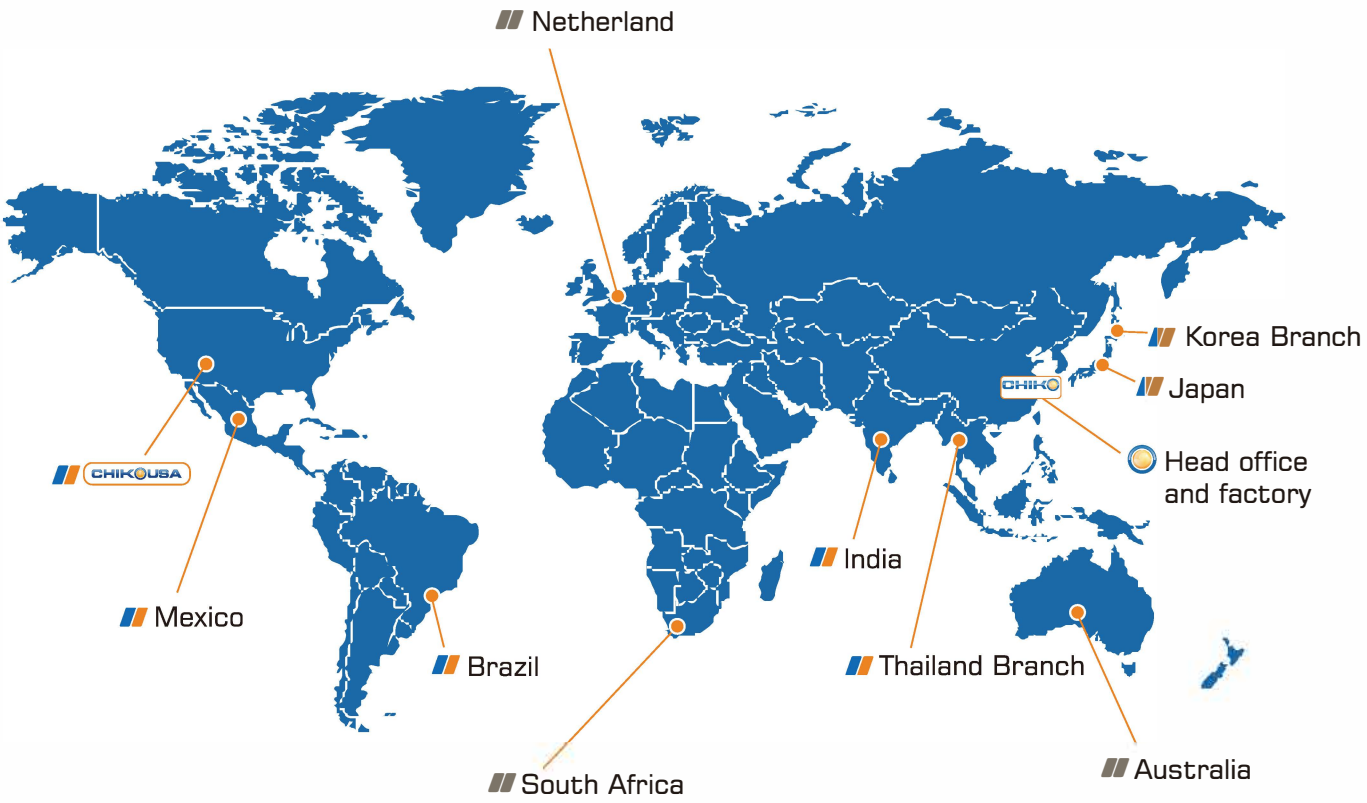

CHIKOUSA
RACKING MADE SIMPLE

Tel : 1-800-948-5390
Email : info@chikousa.com
www.chikousa.com
101 East Baseline Road
Buckeye, AZ 85326