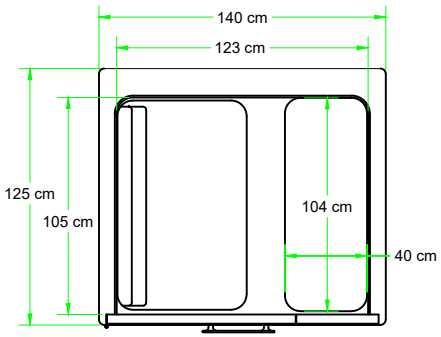

TOP VIEW

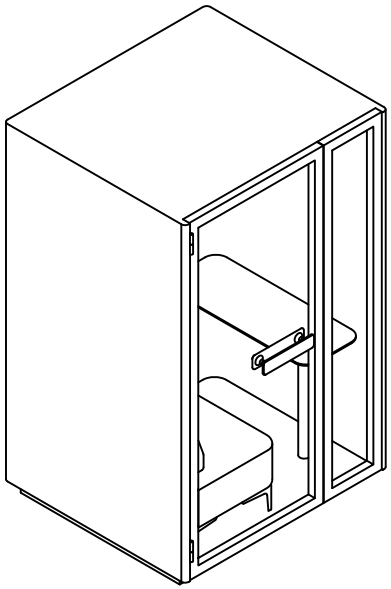

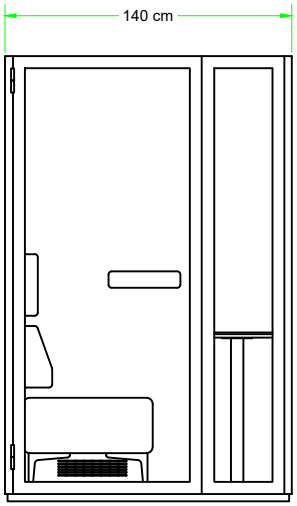

FRONT VIEW

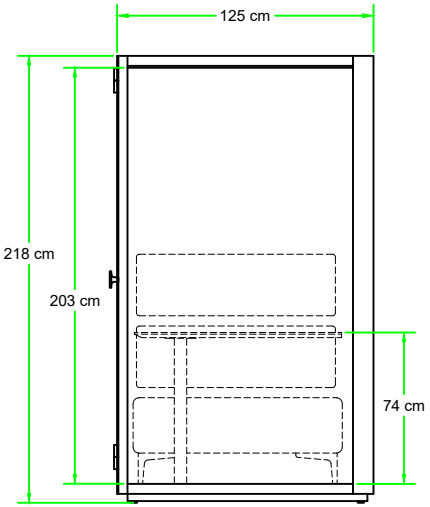

SIDE VIEW

INAPOD

DRAWING NAME : SERIES 2 - W POD	UNITS : MILIMETERS (mm)		
DRAWING MODEL : W POD	REVISION : 1		
DESCRIPTION :			