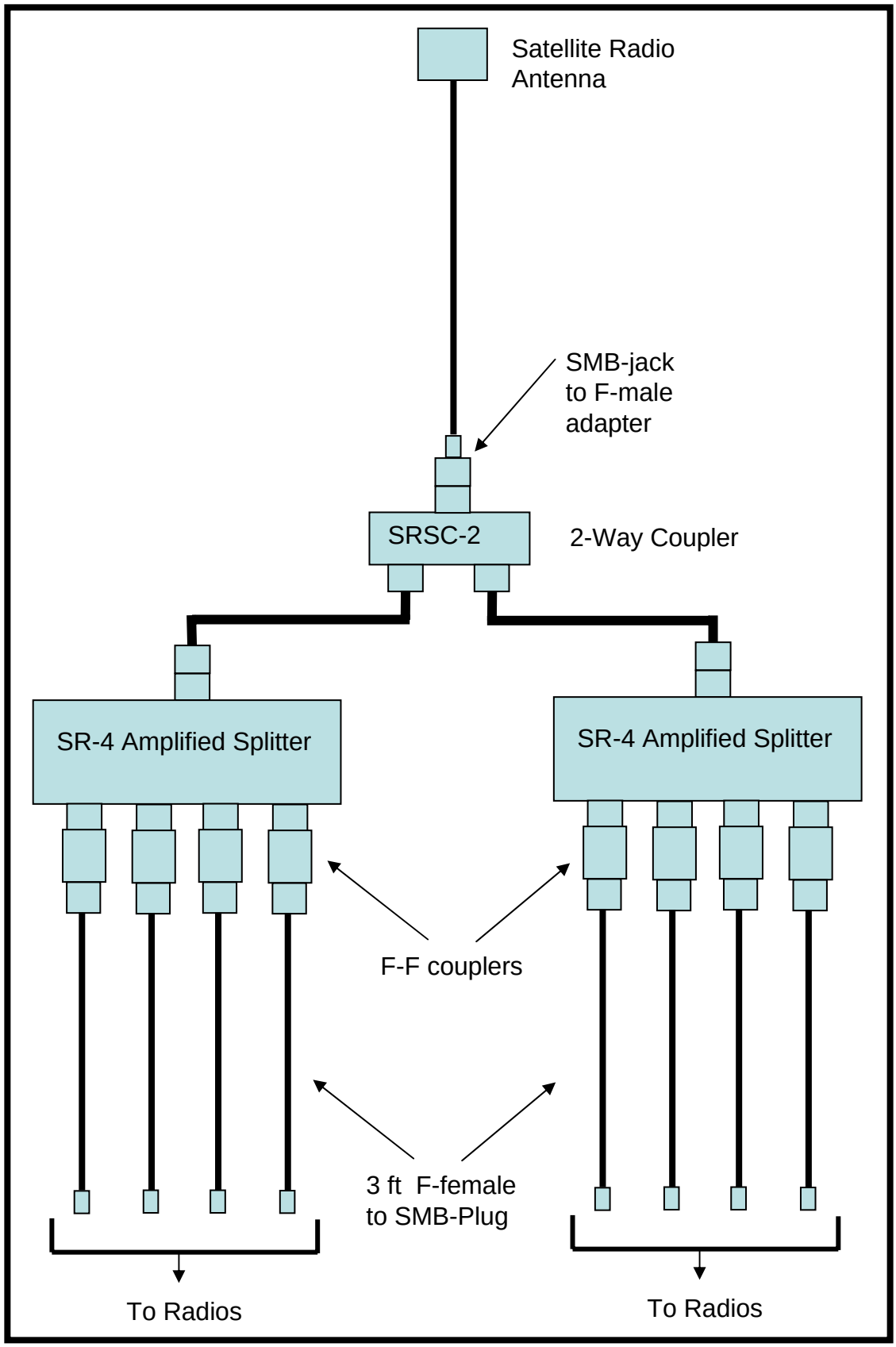
Satellite Radio
Antenna
SMB-jack
to F-male
adapter
SRSC-2
2-Way Coupler
SR-4 Amplified Splitter
SR-4 Amplified Splitter
F-F couplers
3 ft F-female
to SMB-Plug
To Radios
To Radios

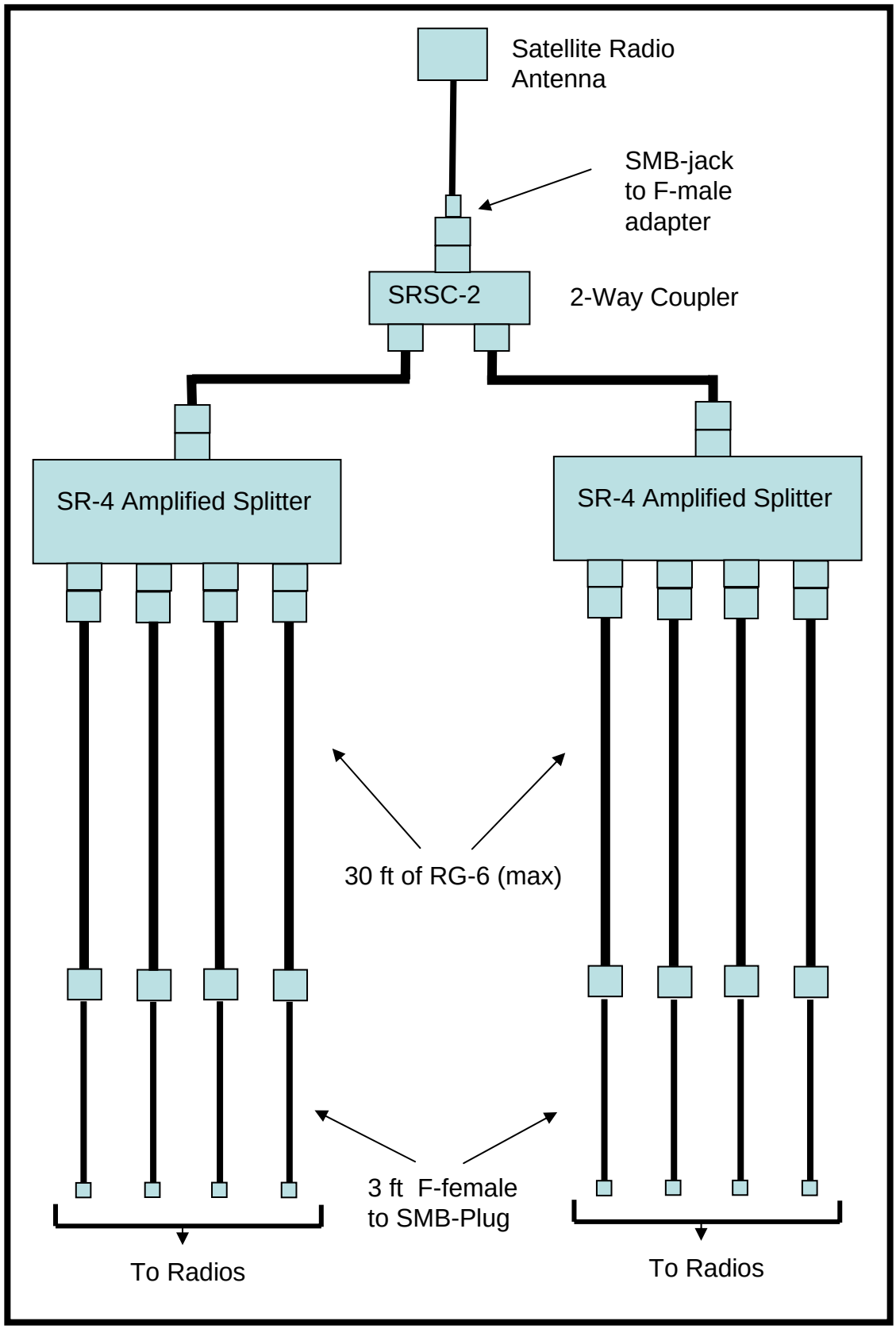
Satellite Radio
Antenna
SMB-jack
to F-male
adapter
SRSC-2
2-Way Coupler
SR-4 Amplified Splitter
SR-4 Amplified Splitter
30 ft of RG-6 (max)
3 ft F-female
to SMB-Plug
To Radios
To Radios

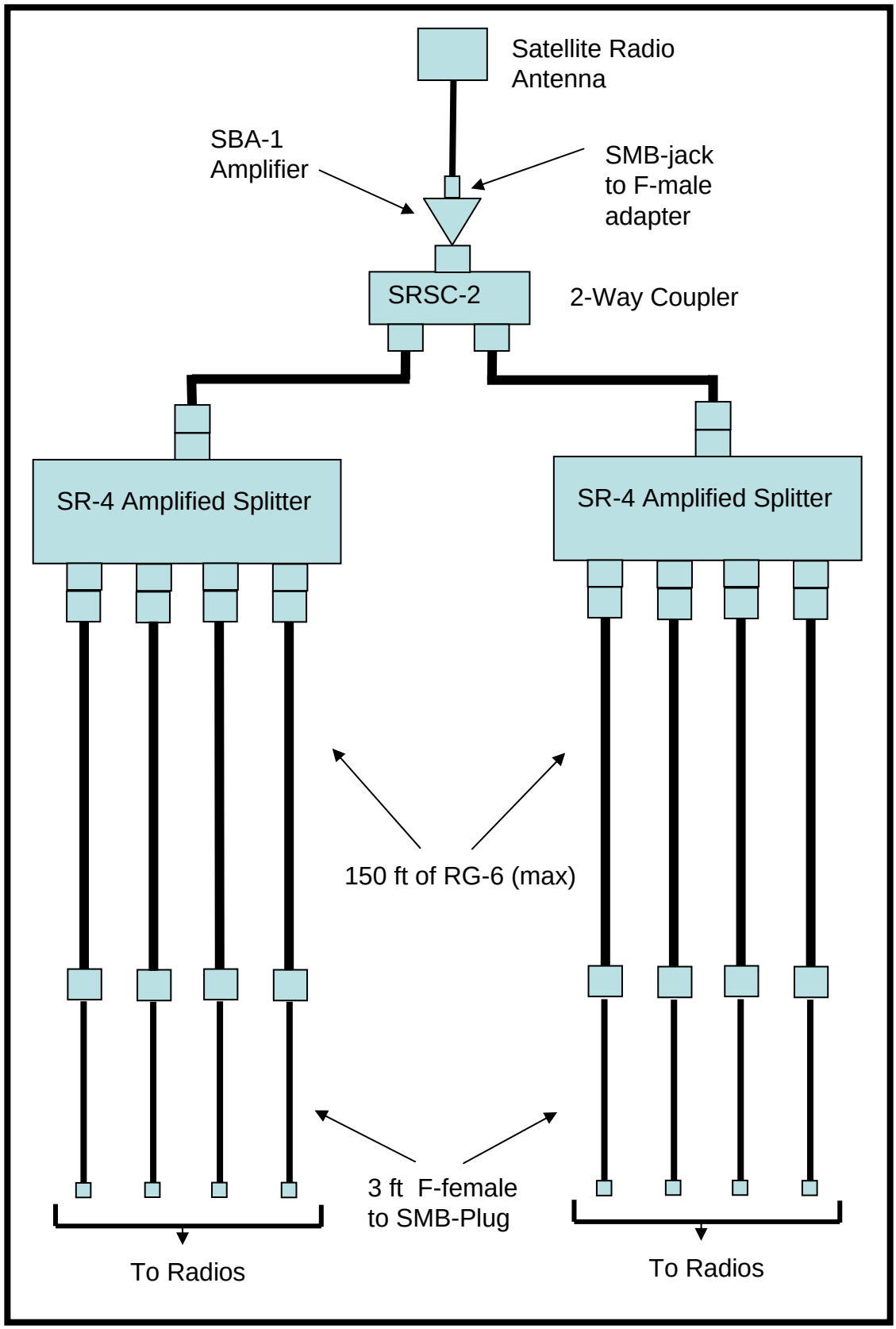
Satellite Radio
Antenna
SBA-1
Amplifier
SMB-jack
to F-male
adapter
SRSC-2
2-Way Coupler
SR-4 Amplified Splitter
SR-4 Amplified Splitter
150 ft of RG-6 (max)
3 ft F-female
to SMB-Plug
To Radios
To Radios